Cessna
SALES AND SERVICE

MORE PEOPLE BUY AND FLY CESSNA AIRPLANES THAN ANY OTHER MAKE

WORLD'S LARGEST PRODUCER OF GENERAL AVIATION AIRCRAFT SINCE 1956

Training

ELECTRONIC Installations

ALL SINGLE ENGINE MODELS AND SUPER SKYMASTER

1969 & ON

SERVICE PARTS MANUAL

Cessna®

AIRCRAFT COMPANY

COMMERCIAL AIRCRAFT DIVISION

Wichita, Kansas

NOTE

This catalog describes electronic installations for 1969 single-engine Cessna Models and the 1969 Super Skymaster. Refer to the Electronics Installations and Service/Parts Manual dated, 1 July 1968 for coverage of 1967 and 1968 models. Refer to the Electronics Installations and Service/Parts Manual dated, 1 January 1966 for coverage of 1963 thru 1966 models. Refer to the Electronics Parts Catalog and Electronics Manual dated, 1 May 1962 for coverage prior to 1963 models.

ORIGINAL ISSUE

15 APRIL 1969

D723-13-RAND-750-4/69

LIST OF EFFECTIVE PAGES

Note: The portion of the text affected by the change is indicated by a vertical line in the outer margins of the page.

Dates of issue for original and changed pages are:
Original . . . 0 . . . 15 April 1969

TOTAL NUMBER OF PAGES IN THIS PUBLICATION IS 610 CONSISTING OF THE FOLLOWING:

Page No.	Change No.
Cover Page	0
A Page	0
i thru vii	0
viii Blank	0
1-1 thru 1-154	0
2-1 thru 2-27	0
2-28 Blank	0
3-1 thru 3-22	0
4-1 thru 4-27	0
4-28 Blank	0
5-1 thru 5-17	0
5-18 Blank	0
6-1 thru 6-13	0
6-14 Blank	0
7-1 thru 7-2	0
0470400 2.0.1 thru 2.29.1	0
0570400 2.0.5 thru 2.42.1	0
0500062 14.3 thru 14.8.2	0
1770000 2.1 thru 2.25.1	0
1770001 14.4.1 thru 14.4.2	0
0770400 2.0.5 thru 2.72.1	0
0700092 14.3 thru 14.4.2	0
0770750 2.0.2 thru 2.49.0	0
0770610 17.23.3 thru 17.26.2	0
1670001 2.2.1 thru 2.3.2	0
1270675 2.0.2 thru 2.55.1	0
1270625 17.26.3 thru 17.29.2	0
1270801 2.0.1 thru 2.33	0
1270800 17.1.1 thru 17.2.3	0
1270475 2.0.2 thru 2.60.1	0
1270405 17.23.3 thru 17.26.2	0
1570001 2.0.3 thru 2.74.1	0
1570000 14.4.5 thru 14.7.2	0
8-1 thru 8-11	0
8-12 Blank	0
Reply Card	0

Upon receipt of the second and subsequent changes to this book, personnel responsible for maintaining this publication in current status should ascertain that all previous changes have been received and incorporated.

* The asterisk indicates pages changed, added, or deleted by the current change.

CROSS REFERENCE LISTING OF POPULAR NAME VS. MODEL NUMBERS AND SERIALS

All aircraft, regardless of manufacturer, are certificated under model number designations. However, popular names are often used for marketing purposes. To provide a consistent method of referring to the various aircraft, model numbers will be used in this publication unless names are required to differentiate between versions of the same basic model. The following table provides a cross-reference listing of popular name vs. model numbers.

POPULAR NAME	MODEL YEAR	MODEL	SERIALS BEGINNING	SERIALS ENDING
150 STANDARD, 150 TRAINER, OR 150 INTER-CITY COMMUTER	1969	150J	15069309	
FRENCH 150	1969	F150J	F150-0390	
172 OR SKYHAWK	1969	172H	17257162 & ON	
FRENCH 172	1969 1969	F172H FR172	F172-0560 FR172-0061	
177 OR CARDINAL	1969	177	17701165	
180	1969	180H	18051994	
182 OR SKYLANE	1969	182M	18259306	
ARGENTINE 182	1969	A182M	A182-0117	
185 SKYWAGON	1969	A185E	185-1448	
SUPER SKYLANE	1969	P206D	P206-0520	

CROSS REFERENCE LIST (CONT'D)

POPULAR NAME	MODEL YEAR	MODEL	SERIALS BEGINNING	SERIALS ENDING
TURBO-SYSTEM SUPER SKYLANE	1969	TP206D	P206-0520	
SKYWAGON 206	1969	U206D	U206-1235	
TURBO SKYWAGON 206	1969	TU206D	U206-1235	
SKYWAGON 207	1969	207	20700001	
TURBO SKYWAGON 207	1969	T207	20700001	
CENTURION	1969	210J	21059062	
TURBO-SYSTEM CENTURION	1969	T210J	T210-0393	
SUPER SKYMASTER	1969	337D	337-0979	
TURBO-SYSTEM SUPER SKYMASTER	1969	T337D	337-0979	
AGWAGON		188-A188	188-0471	

FOREWORD

This manual provides the radio service technician with service information, illustrated parts breakdown and wiring diagrams pertaining to electronic equipment installed in Cessna single-engine aircraft and the Super Skymaster. The catalog is separated into the following eight sections:

Section I - Cessna Crafted Radio Equipment

Section II - Vendor Crafted Radio Equipment

Section III - Antenna Systems

Section IV - Audio Systems

Section V - Miscellaneous Electronic Equipment

Section VI - Electronic Loading Charts

Section VII - Electronic Wiring Diagrams

Section VIII - Numerical Index

The table of contents will enable the readers to find the information necessary to check wiring installations and parts required for any particular radio.

STANDARD PARTS.

Many parts having standard usage have been incorporated into the Cessna Standard System. Parts in this group are designated with the part number prefix "S."

For standard hardware items such as Tinnerman nuts, clamps, etc., "AN" and "NAS" numbers have been used.

USABLE ON CODES....Serial listings in this catalog are noted by a letter code located in the usable on code column which is the extreme right hand column of the parts list page. Usable on codes are applicable only to the figure on which they appear. The code letters and the serials to which they apply are listed at the end of the figure.

If no usable on code appears opposite a first column listing of the figure, the usage is applicable to all models and serials covered by this catalog. If no usable on code appears opposite any indented listing, the usage is applicable to all models and serials covered by the figure on which it appears.

NON-INTERCHANGEABLE PARTS....When parts are not interchangeable with earlier models, all parts applicable to the particular usage are listed. The letter code for the individual part usage is listed in the usable on column opposite each part. Care should be exercised in determining proper serial when ordering to insure receipt of correct part.

INTERCHANGEABLE PARTS....When a later design part is completely interchangeable with the part it replaces, both parts will be serialized and the notation "when exhausted use____" will be entered following the listing of the earlier design part. This means that the earlier design part should be used on airplanes to which they apply until the supply of these parts is exhausted---after which time the later design part must be used. This is done to simplify stocking of parts by our distributors and dealers. The earlier part is as good, physically and functionally, as the later design part---the difference being the later design part can be used on more than one block of airplane serials.

SYMBOLS & PART NUMBER TERMS.

NP - The symbol "NP" appearing in the units per assembly column denotes that the item it appears opposite is not procurable.

AR - The symbol "AR" appearing in the units per assembly column denotes "As Required" and is used to indicate bulk quantity when an indefinite amount is used.

ALT - The symbol "ALT" following the nomenclature of an item is used to denote an alternate part.

LH & RH - The symbols either LH or RH are used following the part nomenclature to denote either left hand or right hand parts.

Other key letter symbols spaced apart from and following the part nomenclature are for cataloging and manufacturing purposes only and are not to be considered by the customer.

A blank entry in the part number column appears before an unprocurable part or installation which is also denoted in the "Units Per Assembly" column by the use of the symbol "NP."

GROUP ASSEMBLY PARTS LIST ARRANGEMENT.

This section lists all replaceable items in the airplane and these items are detailed on illustrations throughout the section. The index numbers on the illustration are keyed to each accompanying parts list. The purpose of the index numbers is to provide complete and positive identification of the article, but should not be used for procurement purposes.

a. The figure and index number column of the parts list shows the figure number once at the beginning of the list. The figure number is followed by a dash and the indexed number. The remaining index numbers are preceded by dash only.

b. The part number column identifies the item by part number.

c. In the description column, relationship of items covered is shown by the degree of indention of each item, for example: The radio installation (Figure 1-1) is listed in column (1) of the description column. The receiver is the next lower assembly and is therefore listed in column (2).

d. If two or more assemblies contain a majority of identical parts or the assemblies are left or right hand, the assemblies are listed together and the next lower assemblies or detail parts are listed as common for both assemblies, with the differing parts coded for usage on the correct major assembly.

e. Attaching parts are listed immediately beneath the item to be attached and preceding any detail parts of the item. They are listed in the same column as the item they attach and are preceded by the caption "Attaching Parts." The end of the attaching parts listing is followed by a separating symbol ---*---.

f. The quantity listed in the "Units Per Assembly" column for attaching parts denotes the total quantity necessary to attach only one part. Total quantity necessary to attach more than one part is obtained by multiplying the attaching parts quantity by the number of parts attached.

g. Component parts of the complete airplane which are not included in any assembly, but which are used in conjunction with, or attach to certain assemblies, are listed either preceding the first detail or following the last detail of the assembly or installation, and in the same column as the major assembly or installation.

h. The quantities listed in the "Units Per Assembly" column are the quantity used per figure.

ACCESSORY KITS.

This catalog describes the factory installation of the equivalent field installation AK Kit and the factory installation is considered standard and illustrated as such.

For information regarding peculiarities of field installation kits consult the applicable AK Kit installation called out in the Accessory Kit Catalog.

BULK ITEMS.

Certain items such as coaxial cable, antenna wire, clamps etc., are noted in the catalog listings as bulk items. When an item is listed as a bulk item, it will be supplied to the dealer in the most convenient bulk length or quantity. Reference to the cut length or quantity per installation provides for the most satisfactory disbursement to the customer.

HOW TO ORDER.

USE YOUR CATALOG TO ORDER PARTS. Use Parts and Accessories Order Form Number P-101A, P-102, or P-103, whichever applies and which will be supplied by Cessna on request. Give complete information on addresses and make sure the part number and part name are as shown in the catalog. Be sure to specify quantities. Specify how the order is to be shipped, otherwise it will be sent out in the manner that seems best to the shipper.

SERIAL, COLOR, & CORROSION PROOFING.

Be sure to indicate model and serial number of the airplane. Serial number is very important to properly identify parts used on each airplane, when color is involved. Be sure to specify what color. If corrosion proofing is desired add the letters "CP" following the part number.

DISTRIBUTION ORDERS.

Distribution will send all orders to the factory with instructions as to the shipping destination. The factory prefers not to make C.O.D. shipments for the distributor and all billing will be made to the distributor in the case of direct shipments.

DEALER ORDERS.

Dealers will place all of their parts order requirements with their distributor. The factory will not honor orders received directly from a dealer. It will be necessary for us to forward it to the distributor for his action. Therefore, dealer orders sent direct to the distributor will result in much faster delivery on any parts that are required.

RETAIL ORDERS.

Retail orders will not be honored by the factory. They are to be placed with the dealer or distributor in the owner's territory and when received directly by the factory will be forwarded to the distributor from whose territory it was received. Considerable saving in time will result to the owner if his orders are placed with his dealer or distributor.

NOTE

Cessna Aircraft Company reserves the right to cancel, add or change the parts and assemblies described in this catalog without notice.

TABLE OF CONTENTS

SECTION I - CESSNA CRAFTED RADIO EQUIPMENT

	Equipment	Page
1-1	Cessna 300 ADF (Type R-521B)	1-2
1-2	Cessna 300 Transceiver (Type RT-524A)	1-12
1-3	Cessna 300 Transponder (Type KT-75R)	1-24
1-4	Cessna 300 Nav/Com (90 Ch. - Type RT-517 & 360 Ch. - Type RT-540A)	1-35
1-5	Cessna 300 Marker Beacon (Type R-502B)	1-47
1-6	Cessna 300 DME (Type KN-60)	1-59
1-7	Cessna 300 HF Transceiver (Type PT-10A)	1-68
1-8	Cessna 400 ADF (Type R-324A)	1-78
1-9	Cessna 400 Transceiver (Type RT-532A)	1-85
1-10	Cessna 400 Nav/Com (Type RT-522A)	1-94
1-11	Cessna 400 Glide Slope (Type R-543B)	1-102
1-12	Cessna 400 Transponder (Type RT-506A)	1-112
1-13	Cessna 300 Nav-O-Matic Installation - Model 172 Only	1-118
1-14	Cessna 300 Nav-O-Matic Installation - Model 177 Only	1-121
1-15	Cessna 300 Nav-O-Matic Installation - Model 180 & 185 Only	1-123
1-16	Cessna 300 Nav-O-Matic Installation - Model 182 Only	1-126
1-17	Cessna 300 Nav-O-Matic Installation - Model 206 Series Only	1-129
1-18	Cessna 300 Nav-O-Matic Installation - Model 207 Series Only	1-131
1-19	Cessna 300 Nav-O-Matic Installation - Model 210 Series Only	1-133
1-20	Cessna 300 Nav-O-Matic Installation - Model 337 Series Only	1-136
1-21	Cessna 400 Nav-O-Matic Installation - Model 182 Only	1-139
1-22	Cessna 400 Nav-O-Matic Installation - Model 206 Series Only	1-142
1-23	Cessna 400 Nav-O-Matic Installation - Model 207 Series Only	1-145
1-24	Cessna 400 Nav-O-Matic Installation - Model 210 Series Only	1-148
1-25	Cessna 400 Nav-O-Matic Installation - Model 337 Series Only	1-151

SECTION II - VENDOR CRAFTED RADIO EQUIPMENT

Figure	Equipment	Page
2-1	King KY-95E Radio Installation	2-2
2-2	King KX-160 Radio Installation	2-5
2-3	Narco Mark 12A Radio Installation	2-9
2-4	Narco UGR-2 Radio Installation	2-19

SECTION III - ANTENNA SYSTEMS

Figure	Equipment	Page
3-1	VHF Antenna Installations	3-2
3-2	Omni Antenna Installations	3-4
3-3	Glide Slope Antenna Installations	3-9
3-4	Marker Beacon Antenna Installations	3-12
3-5	Medium & High Frequency Installations	3-15
3-6	ADF (Sense) Antenna Installation	3-18
3-7	Cessna 400 Transponder (Type A-105B)	3-21
3-8	Cessna 300 Transponder (Type KA-28) Antenna Installation	3-22

SECTION IV - AUDIO SYSTEMS

Figure	Equipment	Page
4-1	Audio Isolation Amplifier & Selector Switch Installations	4-2
4-2	Speaker Installations	4-12
4-3	Cessna Crafted Microphone Installations & Service Parts	4-17
4-4	Headset Installation	4-27

TABLE OF CONTENTS

SECTION V - MISCELLANEOUS ELECTRONIC EQUIPMENT

Figure	Equipment	Page
5-1	Radio Cooling Installations	5-2
5-2	Radio Noise Filter Installations	5-15
5-3	Available Accessory Kits List - See Accessory Kits Catalog	

SECTION VI - ELECTRONIC LOADING CHARTS

Figure	Equipment	Page
6-1	Electronic Loading Chart - Model 150 Only	6-2
6-2	Electronic Loading Chart - Model 172 Only	6-3
6-3	Electronic Loading Chart - Model 177 Only	6-5
6-4	Electronic Loading Chart - Models 180 & 185 Only	6-6
6-5	Electronic Loading Chart - Model 182 Only	6-8
6-6	Electronic Loading Chart - Model 206 Series - RH Auxiliary Locations	6-10
6-7	Electronic Loading Chart - Model 207 Series - RH Auxiliary Locations	6-11
6-8	Electronic Loading Chart - Model 210 Series Only	6-12

SECTION VII - ELECTRONIC WIRING DIAGRAMS

	Page
Table of Contents	7-1

SECTION VIII - NUMERICAL INDEX

	Page
Title Page	8-1

SECTION I

CESSNA CRAFTED RADIO EQUIPMENT

TABLE OF CONTENTS

Figure	Equipment	Page
1-1	Cessna 300 ADF (Type R-521B)	1-2
1-2	Cessna 300 Transceiver (Type RT-524A)	1-12
1-3	Cessna 300 Transponder (Type KT-75R)	1-24
1-4	Cessna 300 Nav/Com (90 Ch.-Type RT-517 & 360 Ch.-Type RT-540A)	1-35
1-5	Cessna 300 Marker Beacon (Type R-502B)	1-47
1-6	Cessna 300 DME (Type KN-60)	1-59
1-7	Cessna 300 HF Transceiver (Type PT-10A)	1-68
1-8	Cessna 400 ADF (Type R-324A)	1-78
1-9	Cessna 400 Transceiver (Type RT-532A)	1-85
1-10	Cessna 400 Nav/Com (Type RT-522A)	1-94
1-11	Cessna 400 Glide Slope (Type R-543B)	1-102
1-12	Cessna 400 Transponder (Type RT-506A)	1-112
1-13	Cessna 300 Nav-O-Matic Installation - Model 172 Only	1-118
1-14	Cessna 300 Nav-O-Matic Installation - Model 177 Only	1-121
1-15	Cessna 300 Nav-O-Matic Installation - Models 180 & 185 Only	1-123
1-16	Cessna 300 Nav-O-Matic Installation - Model 182 Only	1-126
1-17	Cessna 300 Nav-O-Matic Installation - Model 206 Series Only	1-129
1-18	Cessna 300 Nav-O-Matic Installation - Model 207 Series Only	1-131
1-19	Cessna 300 Nav-O-Matic Installation - Model 210 Series Only	1-133
1-20	Cessna 300 Nav-O-Matic Installation - Model 337 Series Only	1-136
1-21	Cessna 400 Nav-O-Matic Installation - Model 182 Only	1-139
1-22	Cessna 400 Nav-O-Matic Installation - Model 206 Series Only	1-142
1-23	Cessna 400 Nav-O-Matic Installation - Model 207 Series Only	1-145
1-24	Cessna 400 Nav-O-Matic Installation - Model 210 Series Only	1-148
1-25	Cessna 400 Nav-O-Matic Installation - Model 337 Series Only	1-151

CESSNA 300 ADF RADIO INSTALLATION

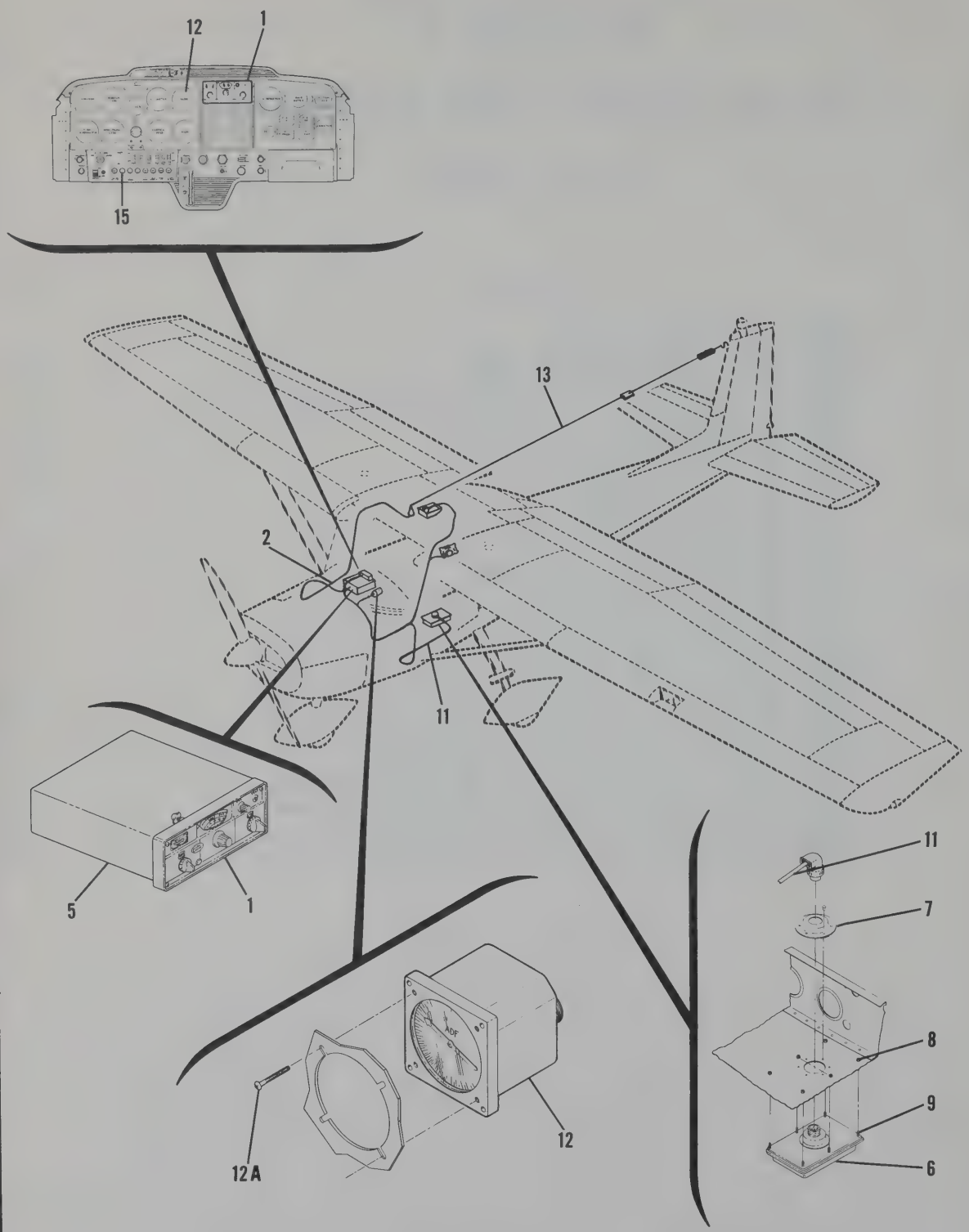

150 SERIAL 15069309 & ON
F150 SERIAL F150-0390 & ON

Figure 1-1. Cessna 300 ADF (Type R-521B) Radio Installation (Sheet 1 of 9)

CESSNA 300 ADF RADIO INSTALLATION

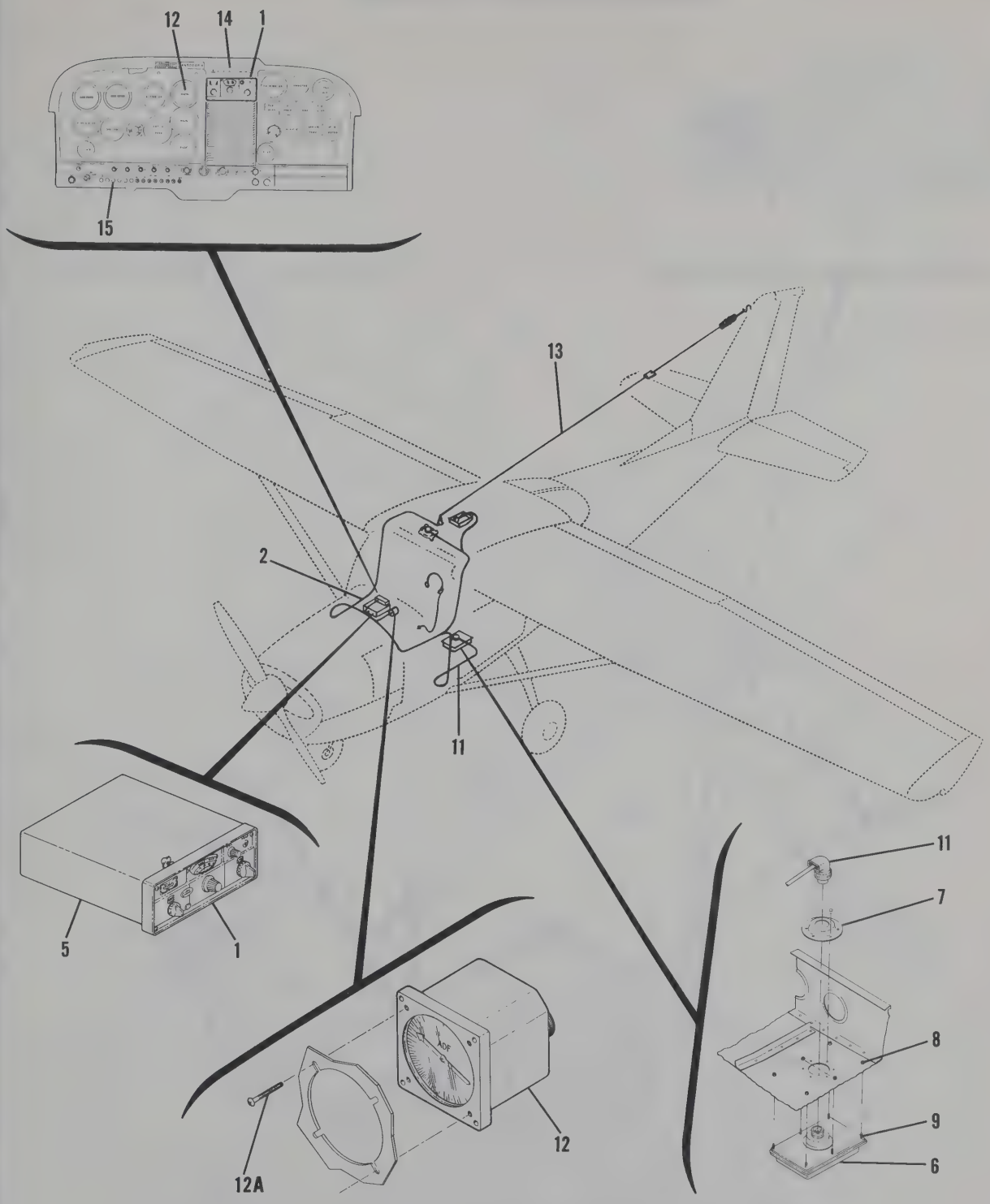

172 SERIAL 17257162 & ON
F172 SERIAL F172-0560 & ON
FR172 SERIAL FR172-0061 & ON

Figure 1-1. Cessna 300 ADF (Type R-521B) Radio Installation (Sheet 2 of 9)

CESSNA 300 ADF RADIO INSTALLATION

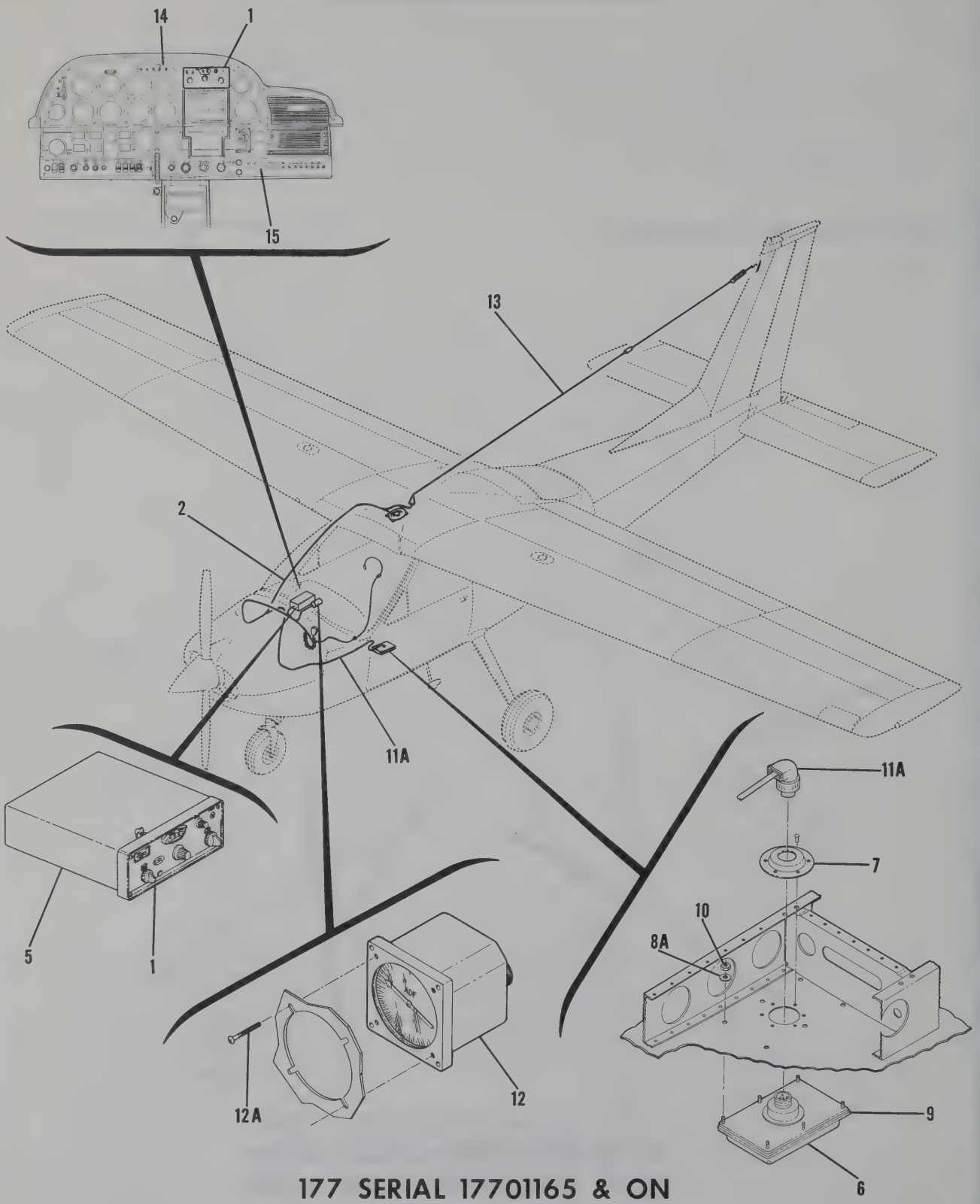

177 SERIAL 17701165 & ON

Figure 1-1. Cessna 300 ADF (Type R-521B) Radio Installation (Sheet 3 of 9)

CESSNA 300 ADF RADIO INSTALLATION

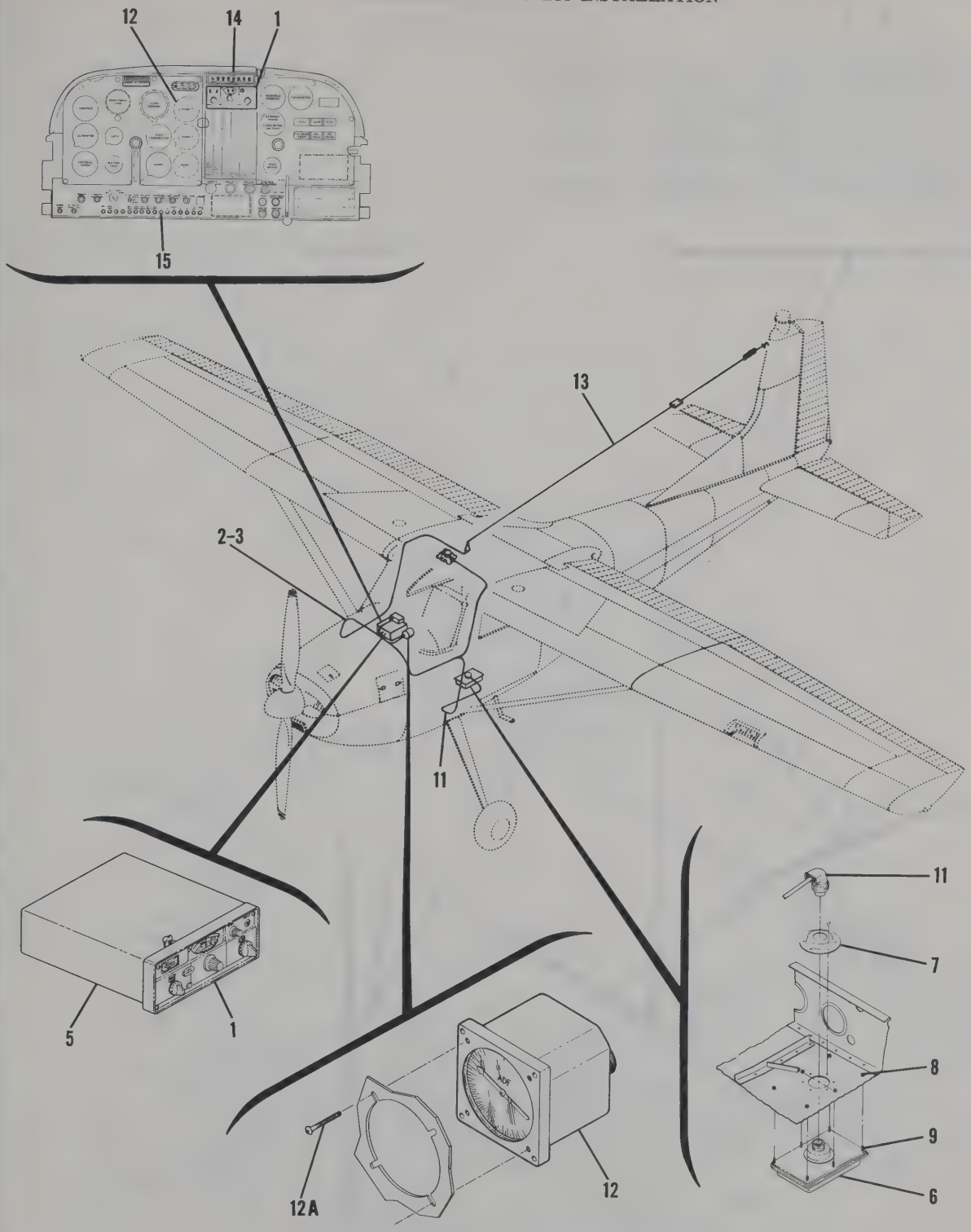

180 SERIAL 18051994 & ON
185 SERIAL 185-1448 & ON

Figure 1-1. Cessna 300 ADF (Type R-521B) Radio Installation (Sheet 4 of 9)

CESSNA 300 ADF RADIO INSTALLATION

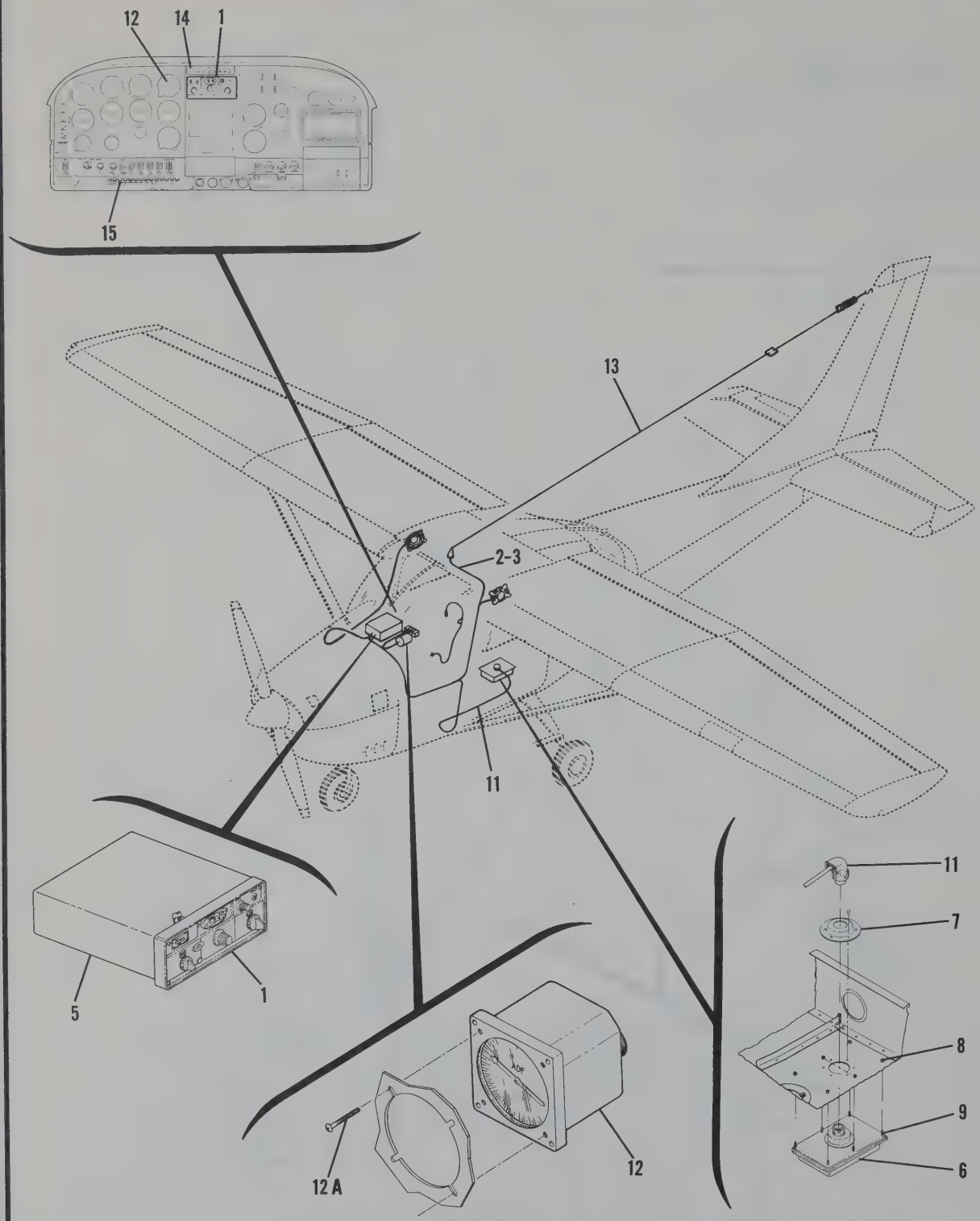

182 SERIAL 18259306 & ON
A182 SERIAL A182-0117 & ON

Figure 1-1. Cessna 300 ADF (Type R-521B) Radio Installation (Sheet 5 of 9)

CESSNA 300 ADF RADIO INSTALLATION

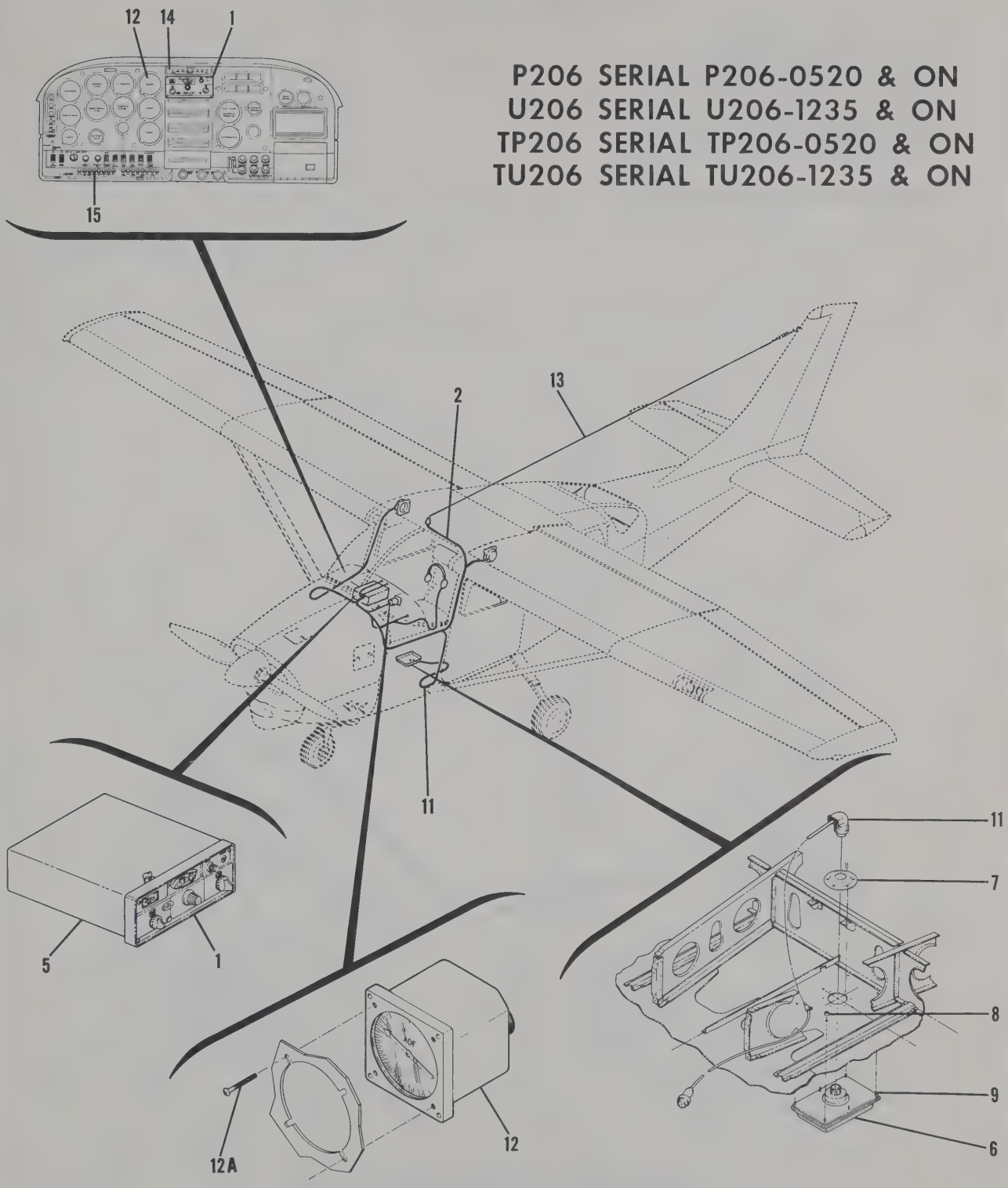

Figure 1-1. Cessna 300 ADF (Type R-521B) Radio Installation (Sheet 6 of 9)

CESSNA 300 ADF RADIO INSTALLATION

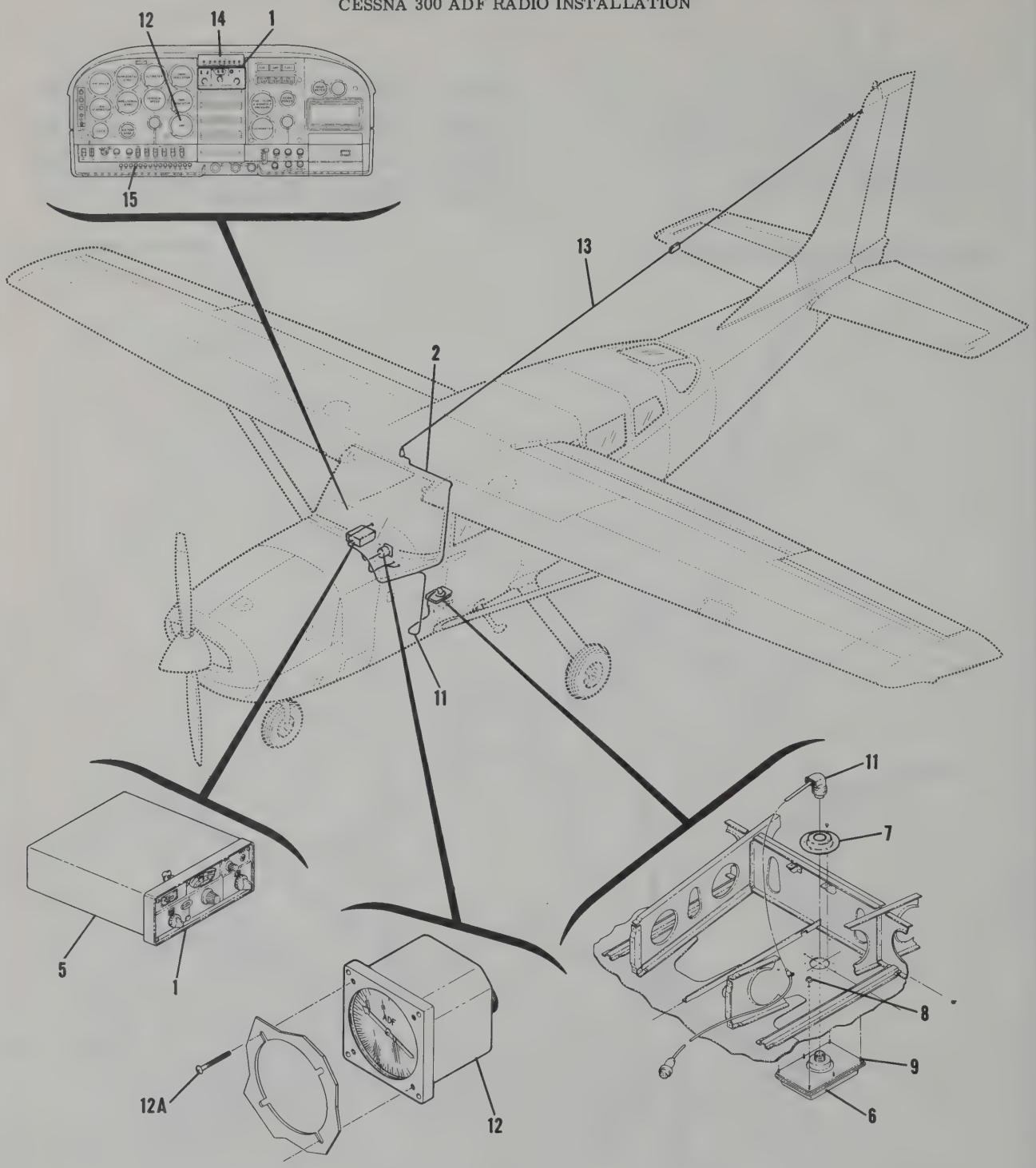

207 SERIAL 20700001 & ON
T207 SERIAL 20700001 & ON

Figure 1-1. Cessna 300 ADF (Type R-521B) Radio Installation (Sheet 7 of 9)

CESSNA 300 ADF RADIO INSTALLATION

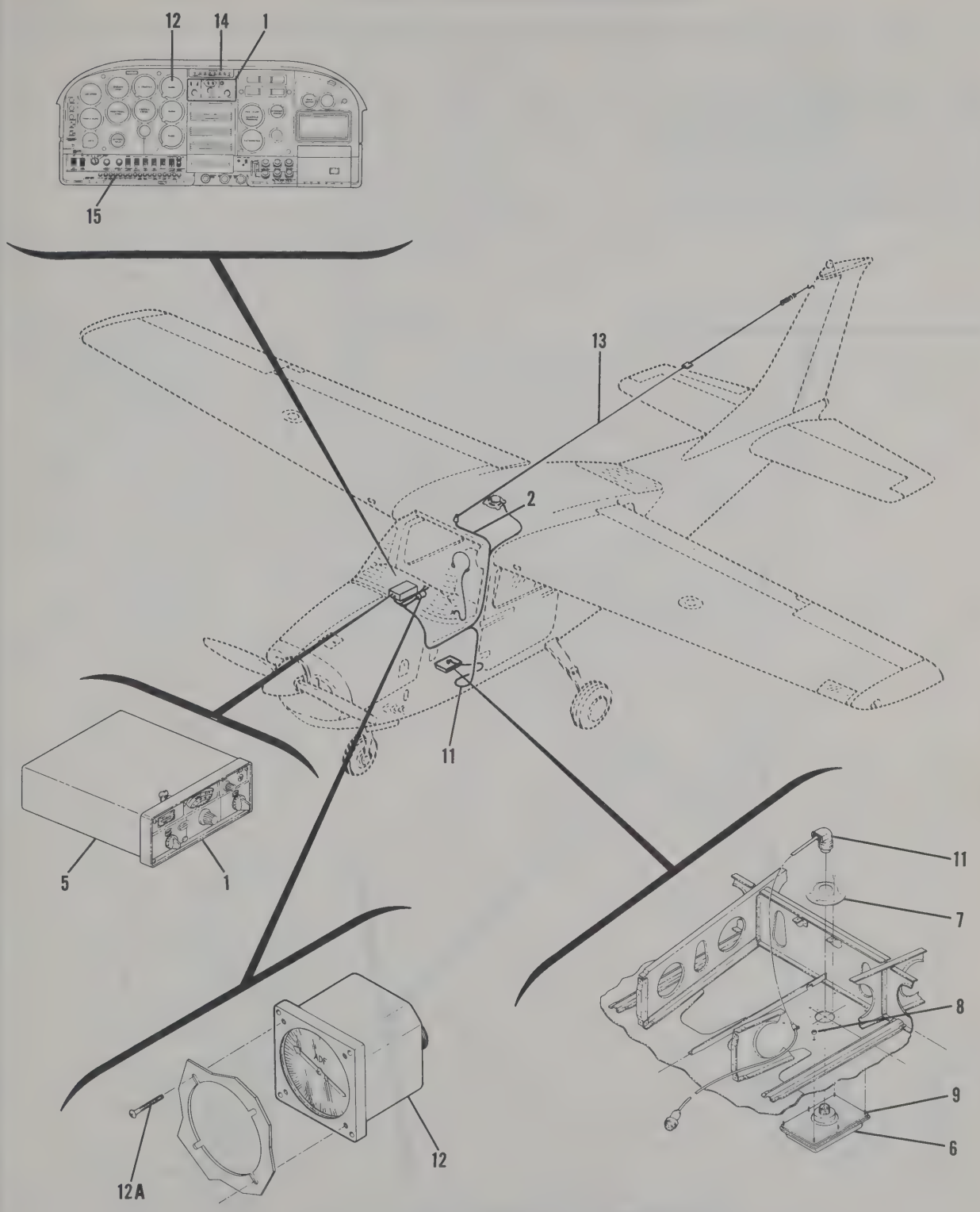

210 SERIAL 21059062 & ON
T210 SERIAL T210-0393 & ON

Figure 1-1. Cessna 300 ADF (Type R-521B) Radio Installation (Sheet 8 of 9)

CESSNA 300 ADF RADIO INSTALLATION

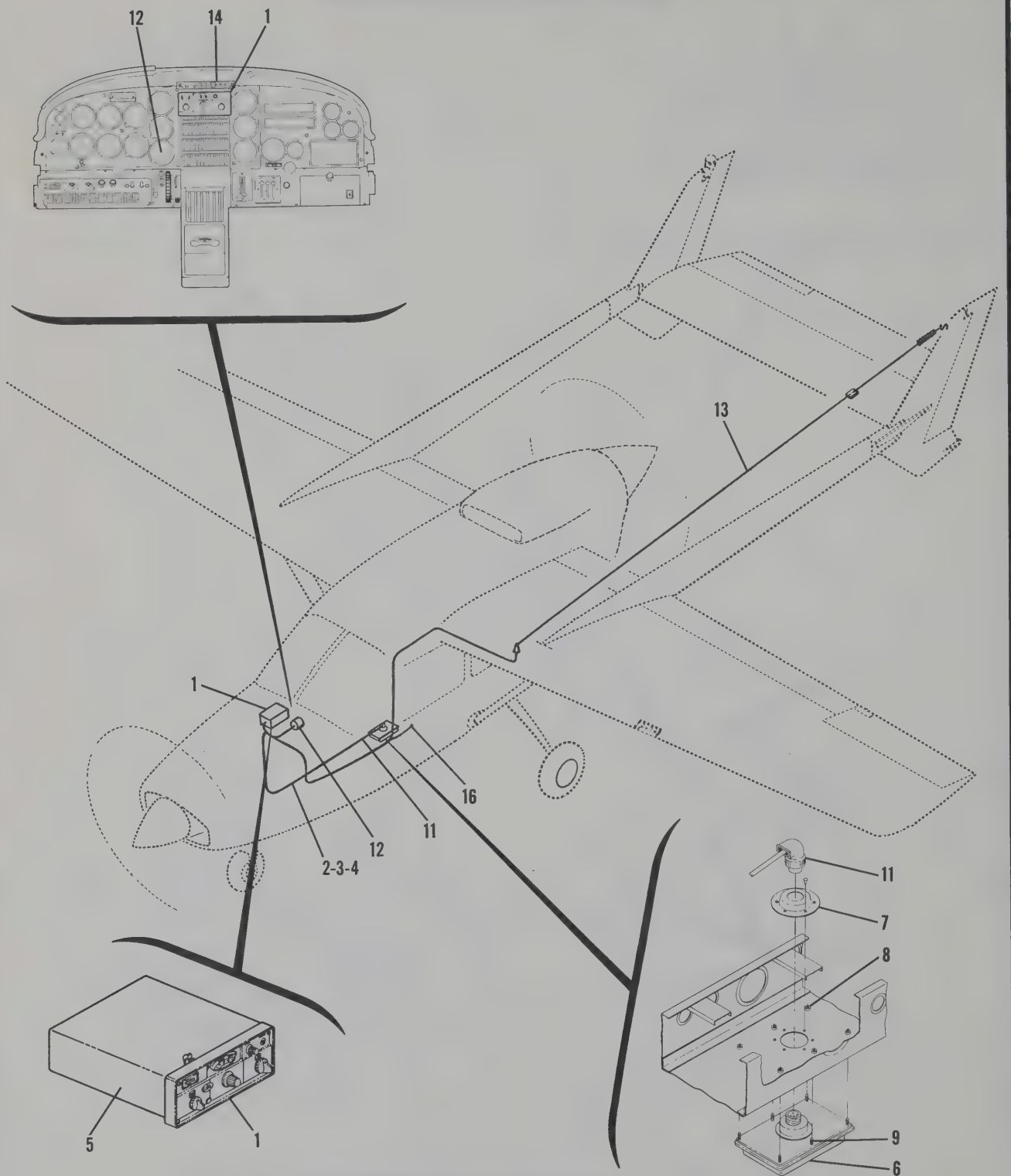

337 SERIAL 337-0979 & ON
T337 SERIAL T337-0979 & ON

Figure 1-1. Cessna 300 ADF (Type R-521B) Radio Installation (Sheet 9 of 9)

FIGURE AND INDEX NO.	PART NUMBER	DESCRIPTION 1 2 3 4 5 6 7	UNITS PER ASSY	USABLE ON CODE
1-1-		CESSNA ADF 300 - TYPE R-521B - RADIO INSTALLATION - ALL MODELS EXCEPT 188	NP	
- 1	35700-1000	RECEIVER WITHOUT BFO ARC	AR	
	35700-1100	RECEIVER WITH BFO ARC	AR	
- 2	32802-1014	CABLE ASSY - WITHOUT MOUNTING - 9 FT SENSE ANT LEAD 14 VOLT SYSTEM ARC	AR	
- 3	32802-1028	CABLE ASSY - WITHOUT MOUNTING - 9 FT SENSE ANT LEAD 28 VOLT SYSTEM ONLY ARC SOME 180, 185, U206 & 337 MODELS	AR	
- 4	32802-1128	CABLE ASSY - WITHOUT MOUNTING - 15 FT SENSE ANT LEAD 28 VOLT SYSTEM ONLY ARC SOME 337 MODELS ONLY	AR	
- 5	29277-0000	CABINET ASSY - MOUNTING LESS CABLE ARC ATTACHING PARTS	1	
	S1022Z6-6	SCREW	4	
	NAS446-2-3	NUT ---*---	4	
- 6	32880-0100	LOOP ANTENNA ARC ATTACHING PARTS	1	
- 7	1511005-1	SHIELD	1	
- 8	S1648-06-75	RIVNUT ALL MODELS EXCEPT 177	6	
- 8A	AN936A6	WASHER 177 & 207 SERIES ONLY	6	
- 9	AN515-6R12	SCREW	6	
- 10	NAS1329C06K120	NUT 177 ONLY ---*---	6	
- 11	33827-0000	CABLE ASSY - LOOP ANT TO INDICATOR ALL MODELS EXCEPT MODEL 177 9 FEET LONG ARC	1	
-11A	33803-0000	CABLE ASSY - LOOP ANT TO INDICATOR MODEL 177 ONLY & SOME 24 VOLT AIRCRAFT 20 FEET LONG ARC	1	
- 12	32680-0000	INDICATOR - TYPE IN-521B ARC ATTACHING PARTS	1	
-12A	AN515B6R12	SCREW ---*---	4	
	SEE FIG 5-2	RADIO NOISE FILTER INSTALLATIONS	1	
- 13	SEE FIG 3-6	ADF SENSE ANTENNA INSTALLATION	1	
- 14	SEE FIG 4-1	TRANSMITTER SELECTOR SWITCH INSTALLATION	AR	
- 15	S1360-5	CIRCUIT BREAKER ALL MODELS EXCEPT 337 & T337	1	
- 16	S1360-2	CIRCUIT BREAKER 337 & T337 ONLY	1	

CESSNA 300 TRANSCEIVER RADIO INSTALLATION

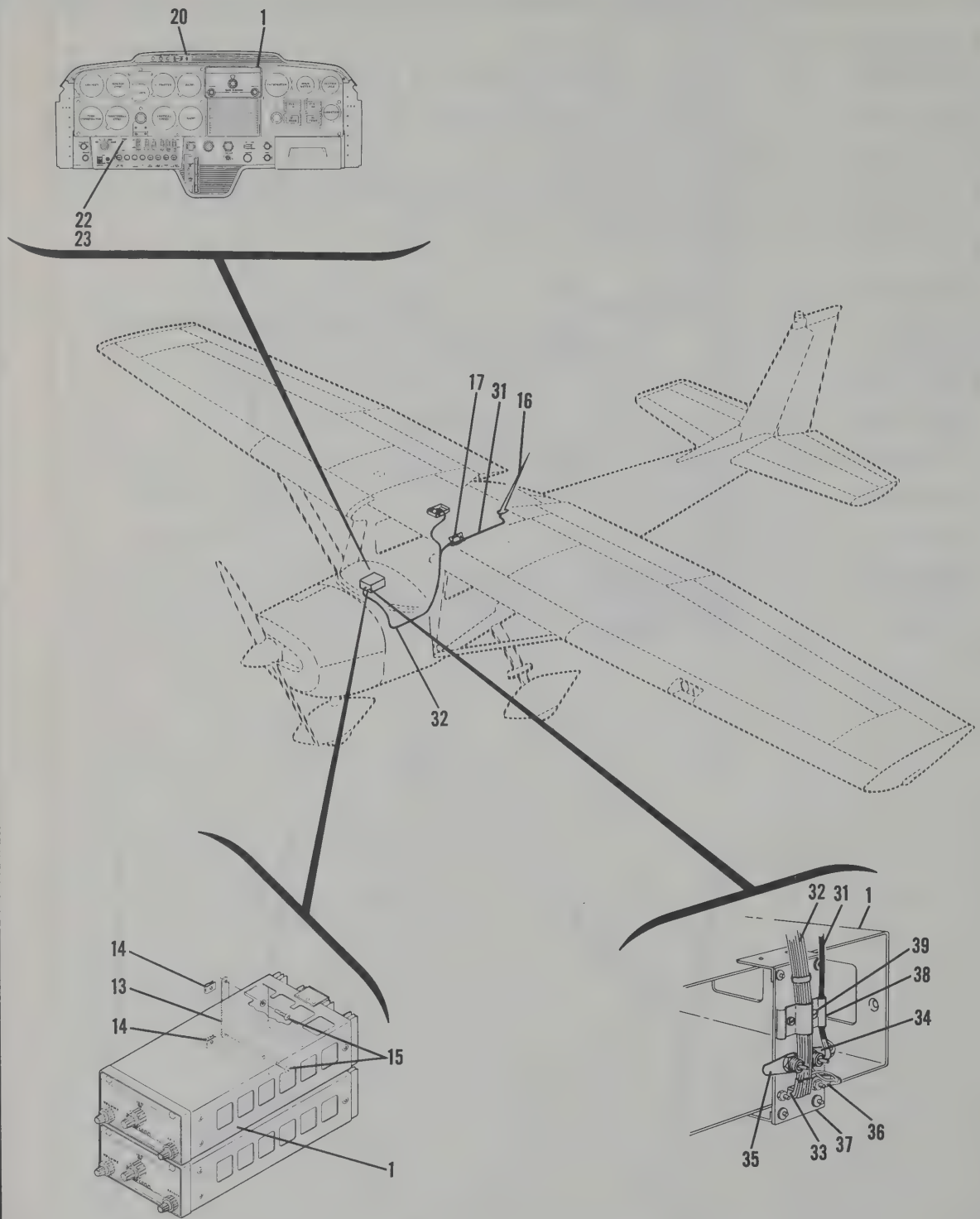

150 SERIAL 15069309 & ON
F150 SERIAL F150-0390 & ON

Figure 1-2. Cessna 300 Transceiver (Type RT-524A) Radio Installation (Sheet 1 of 10)

CESSNA 300 TRANSCEIVER RADIO INSTALLATION

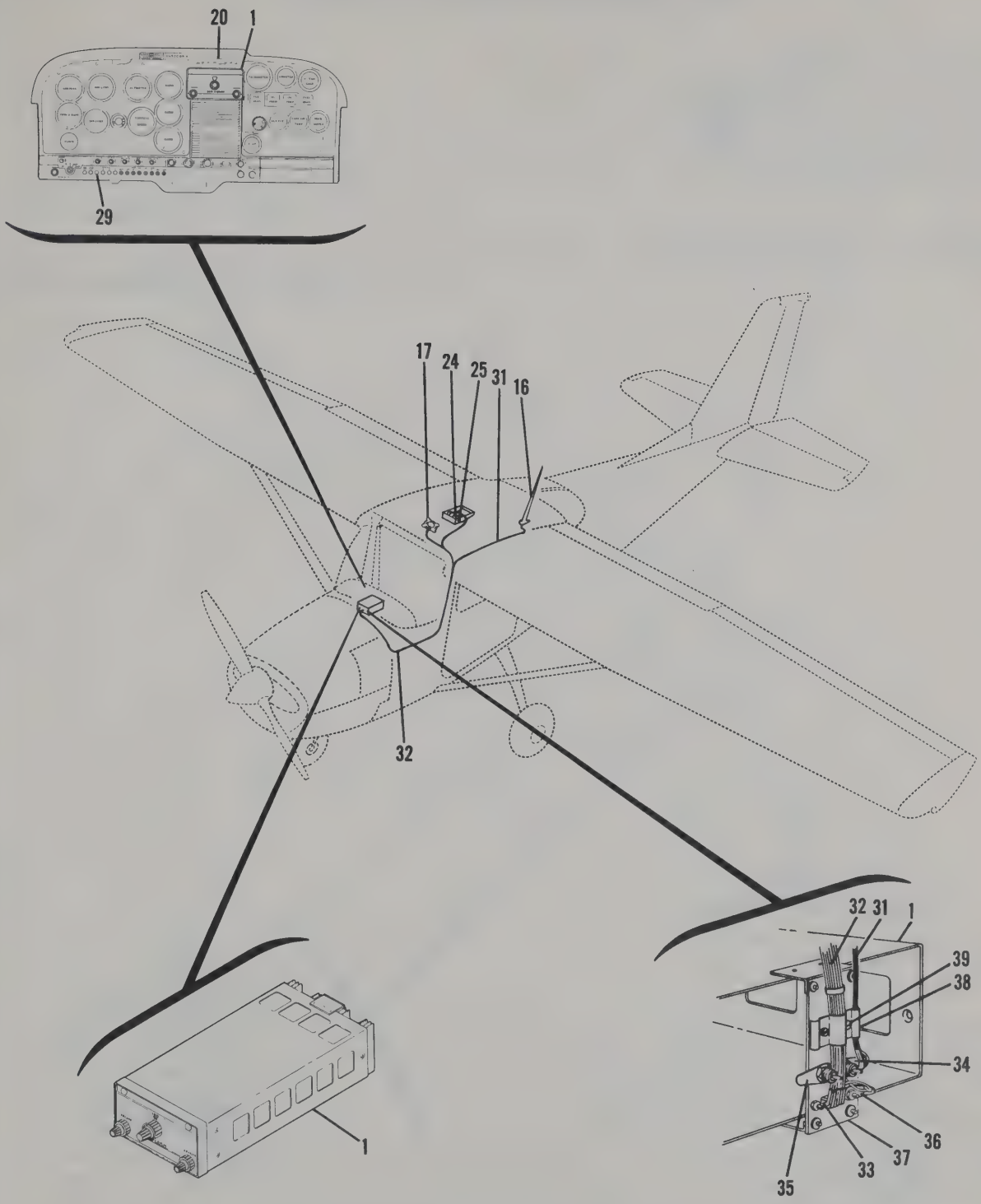

172 SERIAL 17257162 & ON
F172 SERIAL F172-0560 & ON
FR172 SERIAL FR172-0061 & ON

Figure 1-2. Cessna 300 Transceiver (Type RT-524A) Radio Installation (Sheet 2 of 10)

CESSNA 300 TRANSCEIVER RADIO INSTALLATION

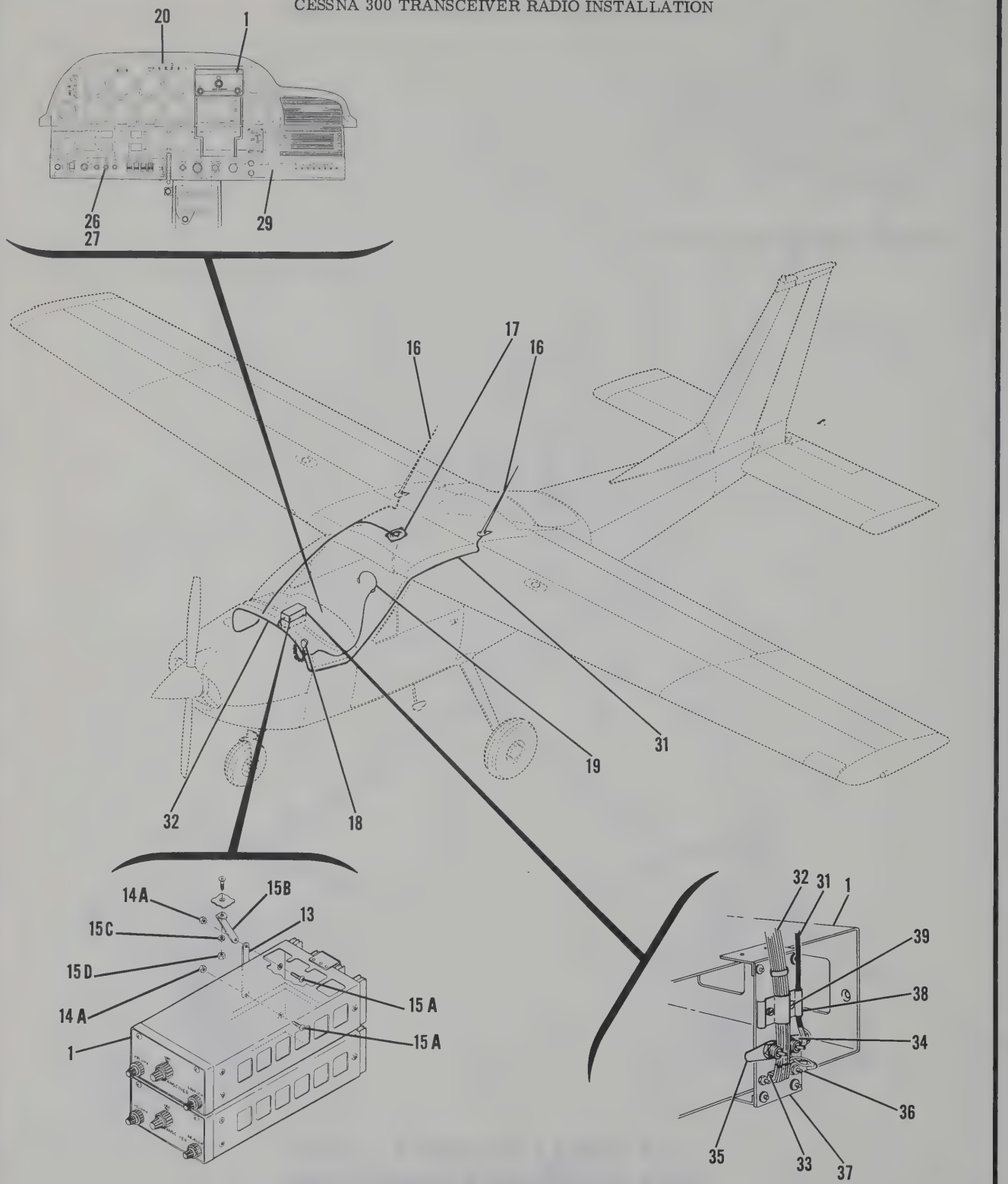

177 SERIAL 17701165 & ON

Figure 1-2. Cessna 300 Transceiver (Type RT-524A) Radio Installation (Sheet 3 of 10)

CESSNA 300 TRANSCEIVER RADIO INSTALLATION

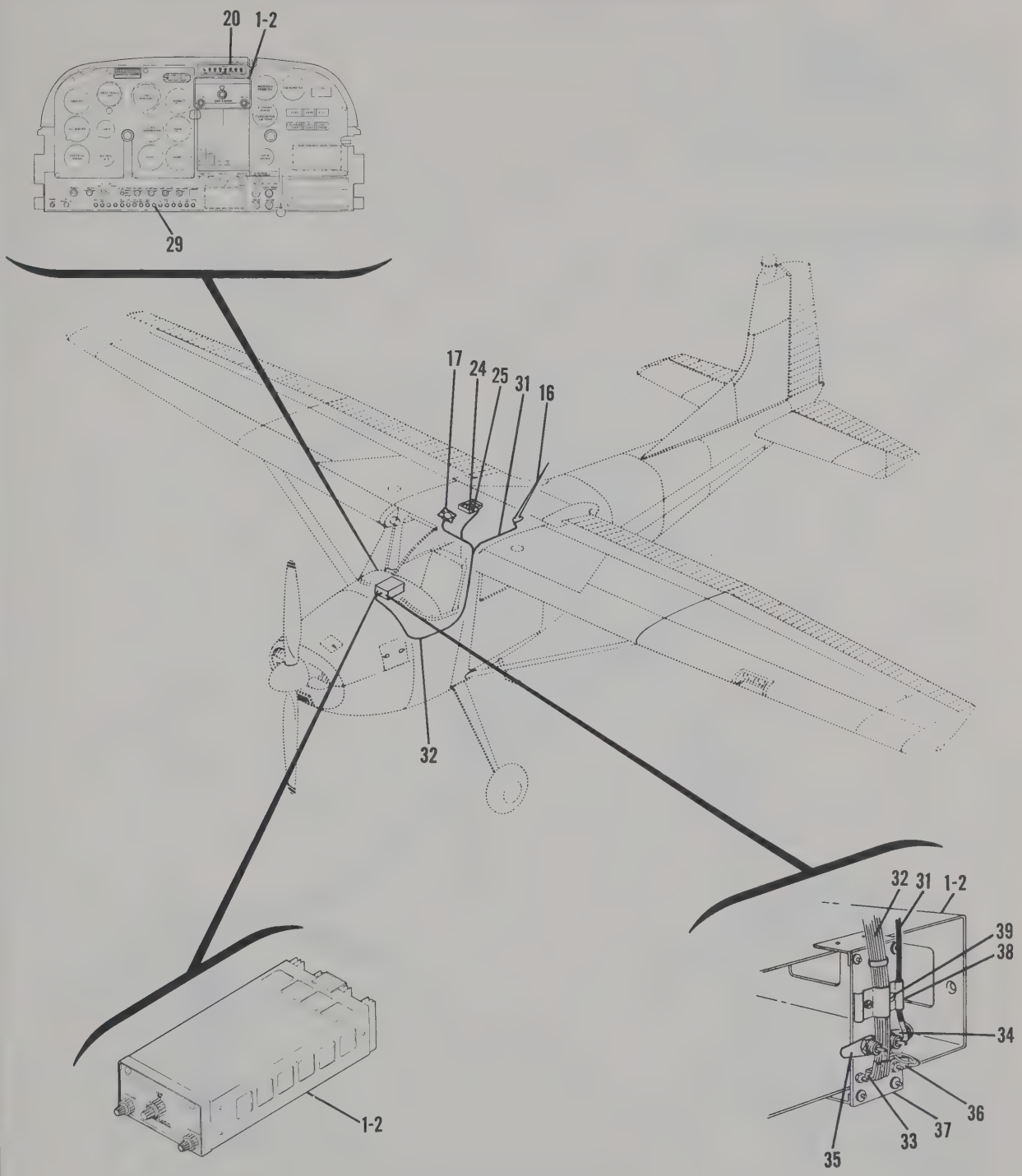

180 SERIAL 18051994 & ON
185 SERIAL 185-1448 & ON

Figure 1-2. Cessna 300 Transceiver (Type RT-524A) Radio Installation (Sheet 4 of 10)

CESSNA 300 TRANSCEIVER RADIO INSTALLATION

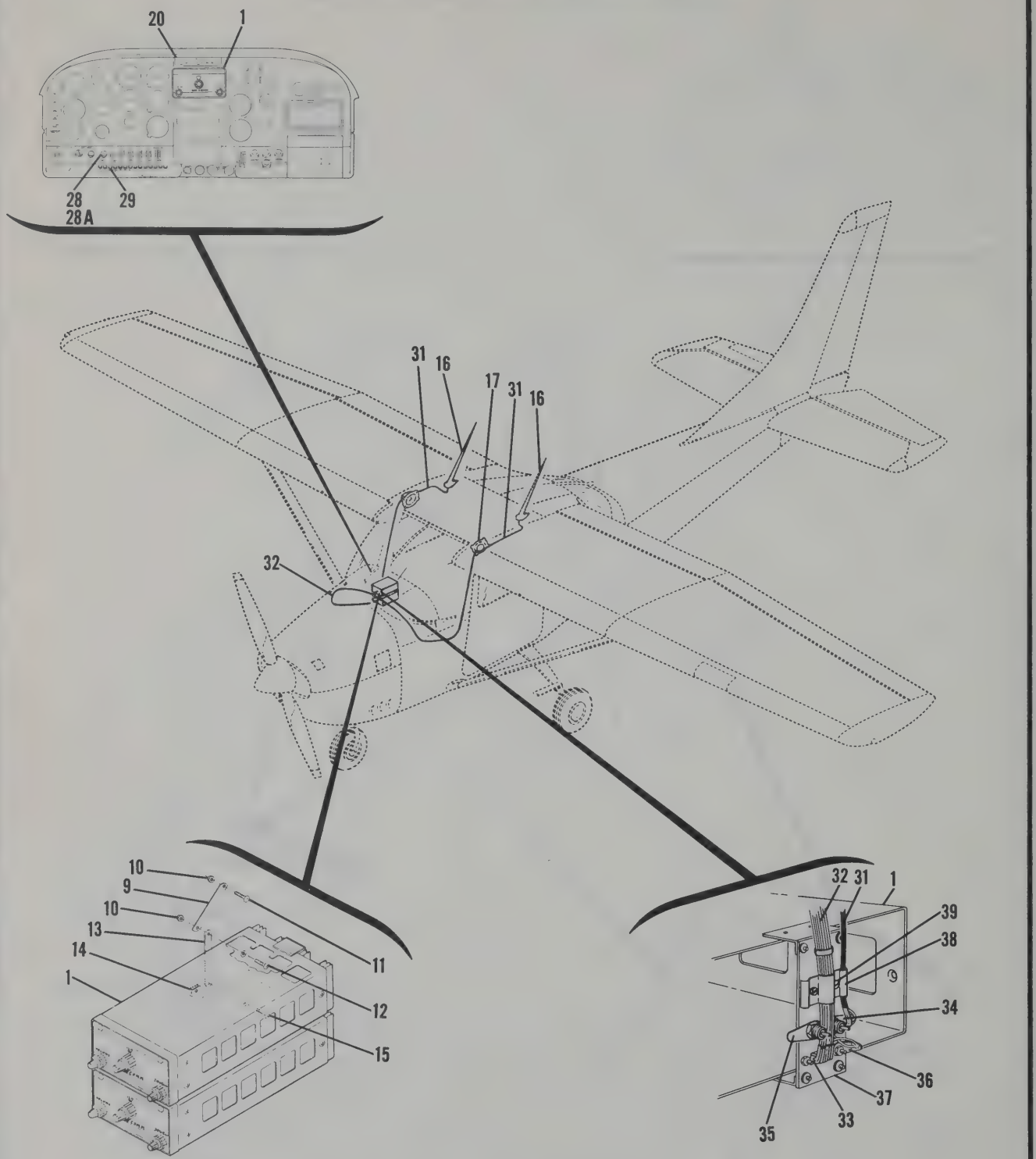

182 SERIAL 18259306 & ON
A182 SERIAL A182-0117 & ON

Figure 1-2. Cessna 300 Transceiver (Type RT-524A) Radio Installation (Sheet 5 of 10)

CESSNA 300 TRANSCEIVER RADIO INSTALLATION

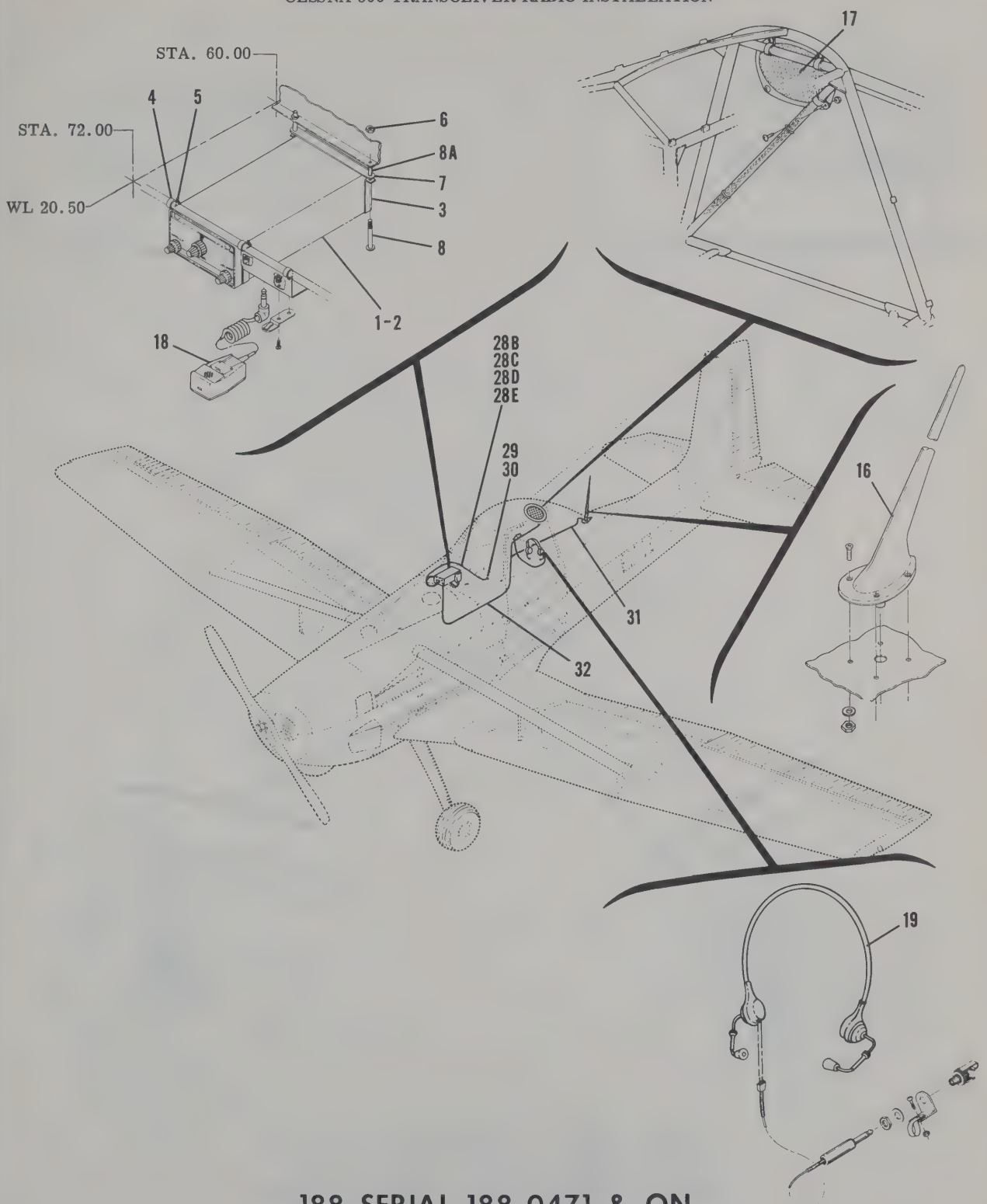

188 SERIAL 188-0471 & ON
A188 SERIAL A188-0471 & ON

Figure 1-2. Cessna 300 Transceiver (Type RT-524A) Radio Installation (Sheet 6 of 10)

CESSNA 300 TRANSCEIVER RADIO INSTALLATION

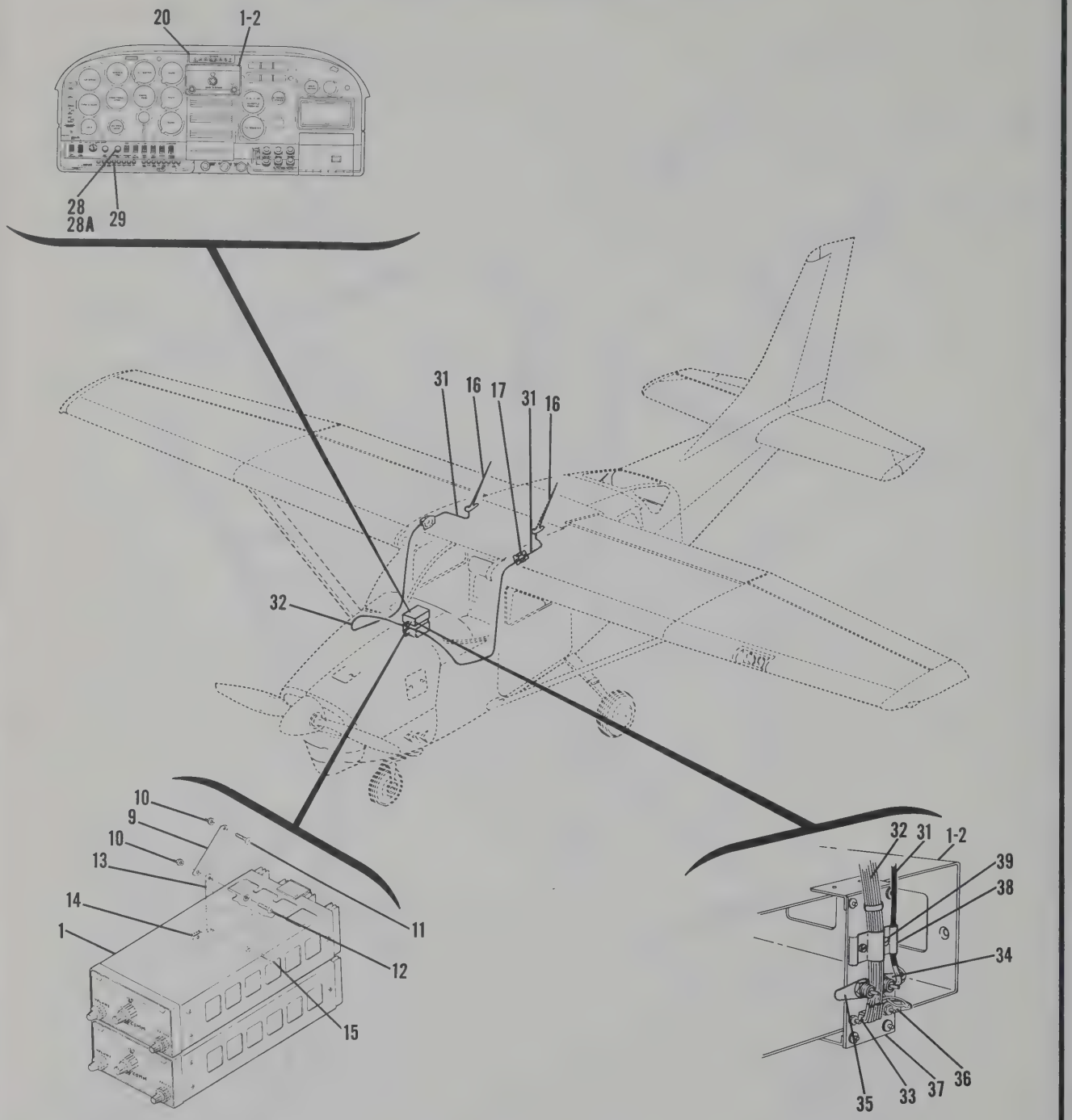

P206 SERIAL P206-0520 & ON
U206 SERIAL U206-1235 & ON
TP206 SERIAL TP206-0520 & ON
TU206 SERIAL TU206-1235 & ON

Figure 1-2. Cessna 300 Transceiver (Type RT-524A) Radio Installation (Sheet 7 of 10)

CESSNA 300 TRANSCEIVER RADIO INSTALLATION

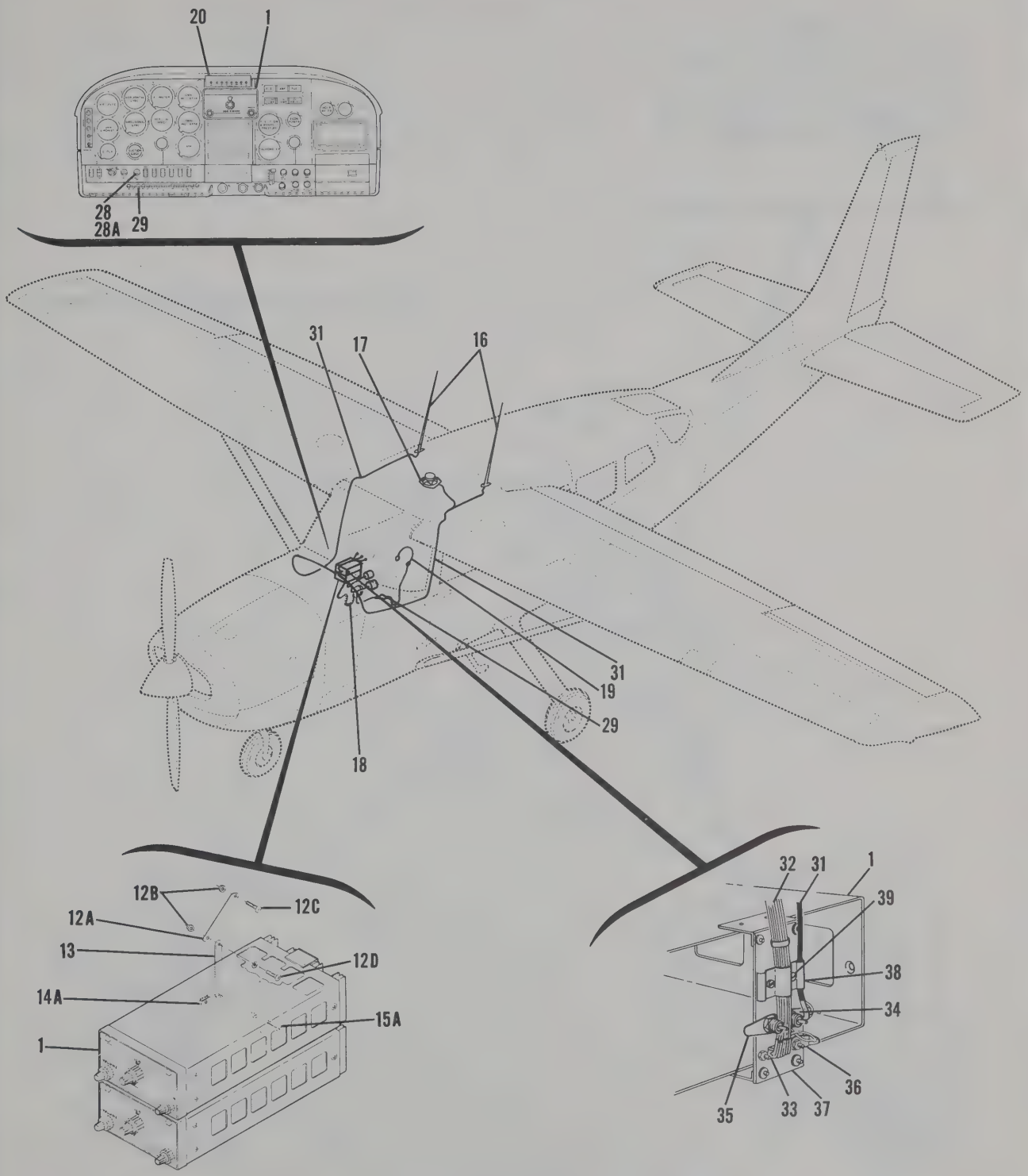

207 SERIAL 20700001 & ON
T207 SERIAL 20700001 & ON

Figure 1-2. Cessna 300 Transceiver (Type RT-524A) Radio Installation (Sheet 8 of 10)

CESSNA TRANSCEIVER 300 RADIO INSTALLATION

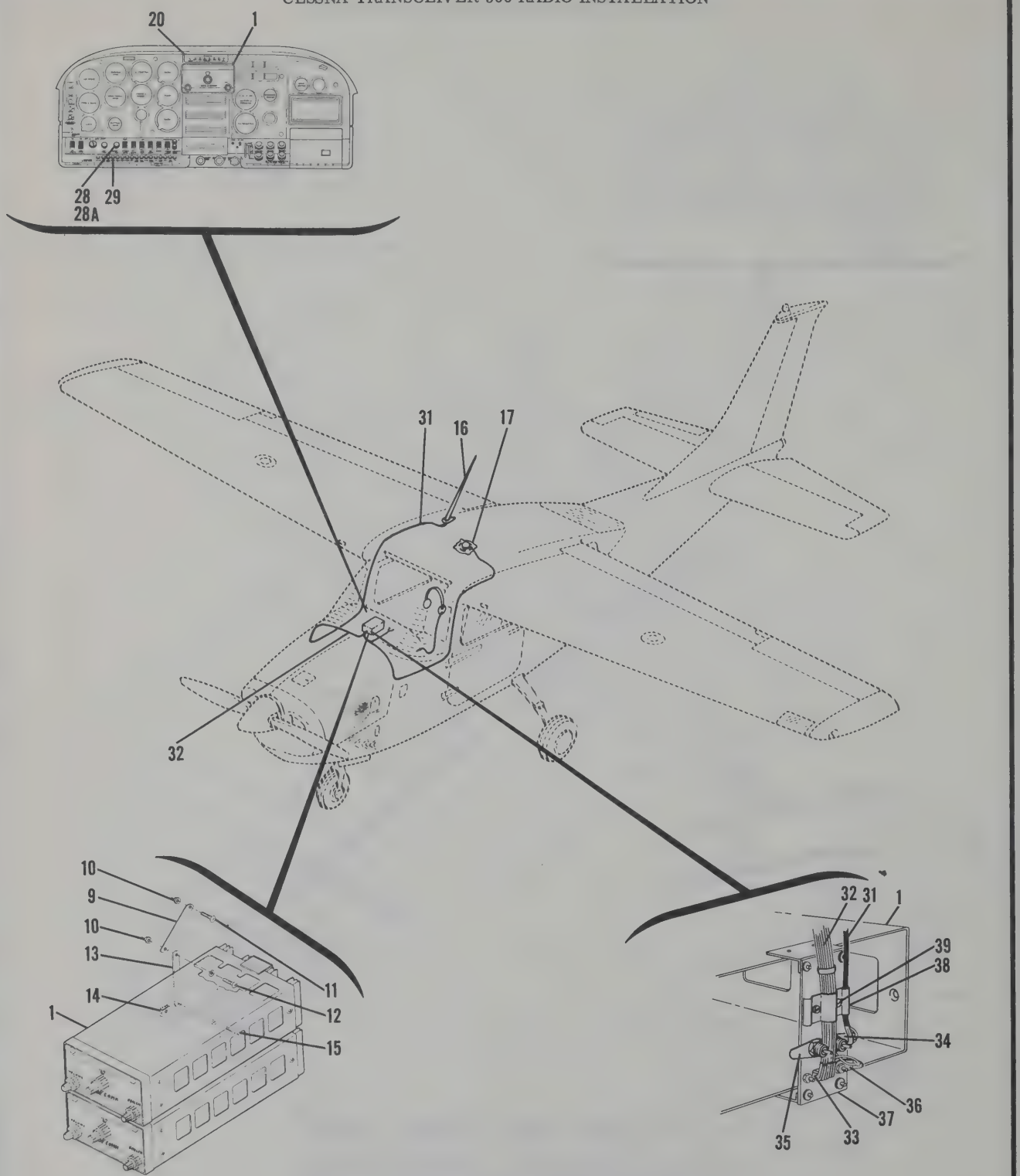

210 SERIAL 21059062 & ON
T210 SERIAL T210-0393 & ON

Figure 1-2. Cessna 300 Transceiver (Type RT-524A) Radio Installation (Sheet 9 of 10)

CESSNA 300 TRANSCEIVER RADIO INSTALLATION

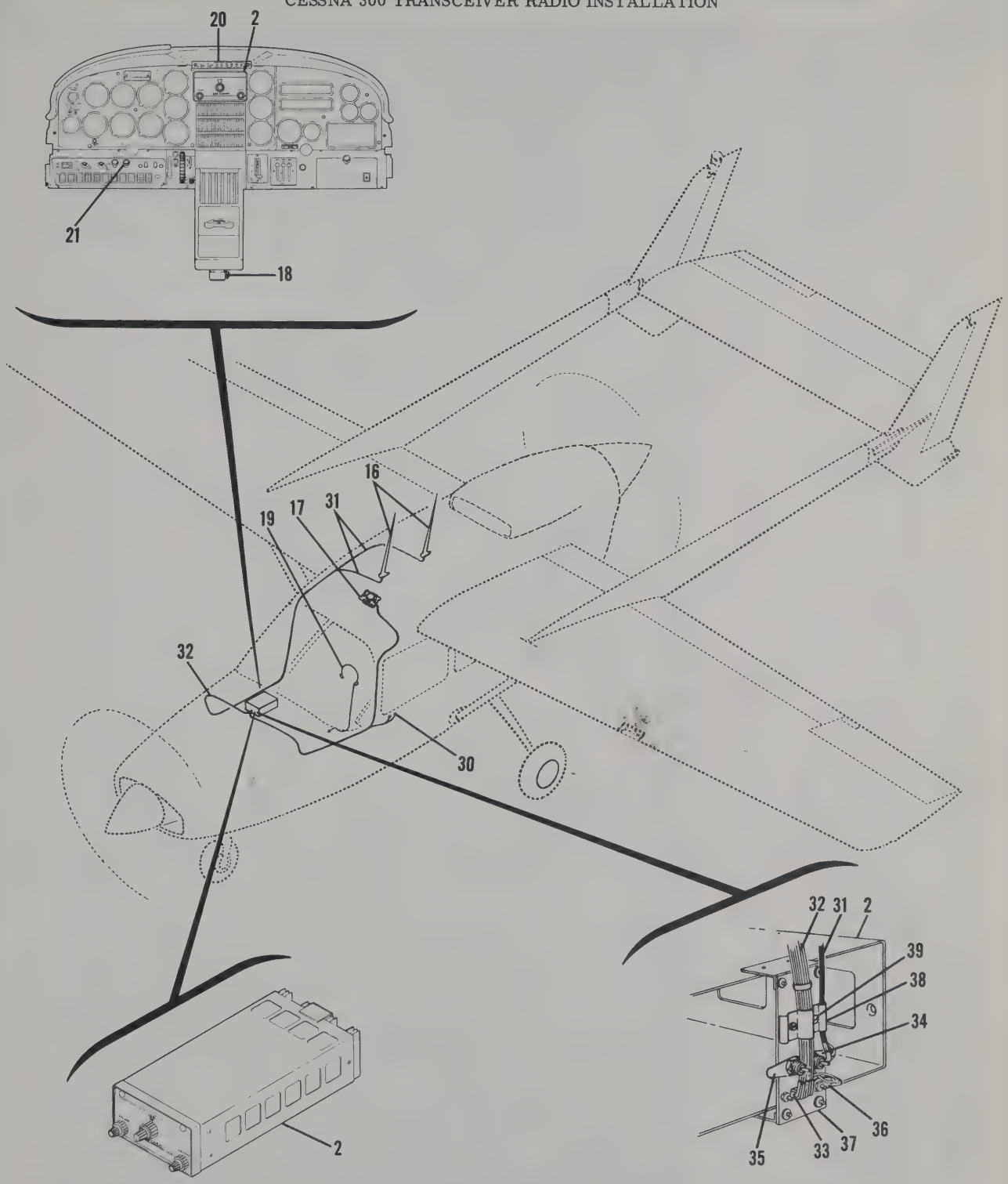

337 SERIAL 337-0979 & ON
T337 SERIAL T337-0979 & ON

Figure 1-2. Cessna 300 Transceiver (Type RT-524A) Radio Installation (Sheet 10 of 10)

FIGURE AND INDEX NO.	PART NUMBER	DESCRIPTION 1 2 3 4 5 6 7	UNITS PER ASSY	USABLE ON CODE
1-2-		CESSNA 300 TRANSCEIVER - TYPE RT-524A	NP	
- 1	31390-1514	VHF TRANSCEIVER - TYPE RT-524A - 14 VOLT SYSTEM ARC	1	
- 2	31390-1528	VHF TRANSCEIVER - TYPE RT-524A - 28 VOLT SYSTEM ARC	1	
		ATTACHING PARTS		
	S1022Z8-8	SCREW	4	
	NAS446-4-3	NUT	4	
- 3	167C012-1	BRACKET 188 ONLY	2	
- 4	AN742D16	CLAMP 188 ONLY	2	
- 5	AN515-8R12	SCREW 188 ONLY	2	
- 6	NAS697A08	NUT 188 ONLY	4	
- 7	167C012-2	BRACKET 188 ONLY	2	
- 8A	NAS43DD5-32	SPACER 188 ONLY	2	
		SCREW 188 ONLY		
		---*---		
- 9	1270465-4	SUPPORT STRAP USED ONLY WHEN ONE RADIO IS INSTALLED	2	
		182, 206 SERIES AND 210 SERIES ONLY		
		ATTACHING PARTS		
- 10	NAS679A06	NUT 182, 206 SERIES AND 210 SERIES ONLY	2	
- 11	AN515-6R6	SCREW 182, 206 SERIES AND 210 SERIES ONLY	1	
- 12	AN507-632R6	SCREW 182, 206 SERIES AND 210 SERIES ONLY	1	
		---*---		
-12A	1270465-1	SUPPORT STRAP USED ONLY WHEN ONE RADIO IS INSTALLED	2	
		207 SERIES ONLY		
		ATTACHING PARTS		
-12B	NAS679A06	NUT	4	
-12C	AN515-6R6	SCREW	2	
-12D	AN507-632R8	SCREW	2	
		---*---		
- 13	1270465-3	SUPPORT STRAP 150, 177, 182, 206 SERIES, 207 SERIES	1	
		AND 210 SERIES ONLY USED ONLY WHEN TWO RADIOS		
		ARE INSTALLED		
		ATTACHING PARTS		
- 14	NAS395-16-3	NUT 150, 182, 206 SERIES AND 210 SERIES ONLY	1	
		TWO REQD ON 150		
-14A	NAS679A06	NUT 177 & 207 SERIES ONLY	2	
- 15	S1022Z8-8	SCREW 150, 182, 206 SERIES AND 210 SERIES ONLY	1	
		TWO REQD ON 150		
-15A	AN507-632R8	SCREW 177 & 207 SERIES ONLY	2	
		---*---		
-15B	1713125-1	SUPPORT STRAP 177 ONLY	2	
		ATTACHING PARTS		
-15C	AN960-8	WASHER 177 ONLY	AR	
-15D	NAS679A08	NUT 177 ONLY	2	
		---*---		
- 16	SEE FIG 3-1	VHF ANTENNA INSTALLATION	1	
- 17	SEE FIG 4-2	SPEAKER INSTALLATION	1	
- 18	SEE FIG 4-3	MICROPHONE INSTALLATION	1	
- 19	SEE FIG 4-4	HEADSET INSTALLATION	1	
- 20	SEE FIG 4-1	TRANSMITTER & AUDIO SELECTOR SWITCHES	1	
	SEE FIG 5-1	RADIO COOLING INSTALLATION	1	
- 21	1570164-1	SWITCH ASSY-LIGHT DIMMING 337 SERIES ONLY	1	
	9341GL	RHEOSTAT CPH	1	
	S1832-1	SWITCH	1	
- 22	S1880-1	RHEOSTAT 150 ONLY	1	
- 23	S1918-1	KNOB-RHEOSTAT 150 ONLY	1	
- 24	C413126-5	RHEOSTAT 172, 182 & 185 ONLY	1	
- 25	S1390-5	KNOB-RHEOSTAT 172, 182 & 185 ONLY	1	
- 26	C413126-5	RHEOSTAT 177 ONLY	1	
- 27	S1753-6	KNOB-RHEOSTAT 177 ONLY	1	
	S1780-4	INSERT-RHEOSTAT KNOB 177 ONLY	1	
- 28	S1880-3	RHEOSTAT 182, 206 SERIES, 207 SERIES & 210 SERIES ONLY	1	
-28A	S1753-7	KNOB-RHEOSTAT 182, 206 SERIES, 207 SERIES &	1	
		210 SERIES ONLY		
-28B	S1880-3	RHEOSTAT 12 VOLT 188 ONLY	1	
-28C	S1390-5	KNOB-RHEOSTAT 12 VOLT 188 ONLY	1	
-28D	S1880-5	RHEOSTAT 24 VOLT 188 ONLY	1	
-28E	S1390-5	KNOB-RHEOSTAT 24 VOLT 188 ONLY	1	
- 29	S1360-15	CIRCUIT BREAKER ALL MODELS EXCEPT 150, 337 & T337	1	
- 30	S1360-8	CIRCUIT BREAKER 337, T337 & 24V 188 ONLY	1	
- 31		CABLE ASSY - TRANSCEIVER TO VHF ANTENNA	NP	
	RG-58A/U	COAXIAL CABLE - BULK ITEM	AR	
	UG-913/U	PLUG - COAXIAL - RT ANGLE CONNECTS TO ANTENNA	1	

CONTINUED ON NEXT PAGE

FIGURE AND INDEX NO.	PART NUMBER	DESCRIPTION 1 2 3 4 5 6 7	UNITS PER ASSY	USABLE ON CODE
1-2- 32		CABLE ASSY - MAIN CABLE ASSY ----------	NP	
- 33	29747-0018	CONNECTOR CONNECTS TO REAR RECEIVER PLATE ----------	REF	
		SUPPLIED WITH RECEIVER		
- 34	29753	CONNECTOR CONNECTS TO REAR RECEIVER PLATE ----------	REF	
		SUPPLIED WITH RECEIVER		
- 35	29752	CONNECTOR CONNECTS TO REAR RECEIVER PLATE ----------	REF	
		SUPPLIED WITH RECEIVER		
- 36	1488-4	TERMINAL LUG CONNECTS TO 29747-0018 CONNECTOR ---------	REF	
		SUPPLIED WITH RECEIVER		
- 37	31398	PLATE - REAR CONNECTS TO REAR RECEIVER ----------	REF	
		SUPPLIED WITH RECEIVER		
- 38	31396	CLIP - ATTACHES CABLE ASSEMBLY TO 31398 REAR PLATE ON -----	REF	
		RECEIVER SUPPLIED WITH RECEIVER		
		ATTACHING PARTS		
- 39	338-4032	SCREW SUPPLIED WITH RECEIVER ----------	REF	
		---*---		

CESSNA 300 TRANSPONDER RADIO INSTALLATION

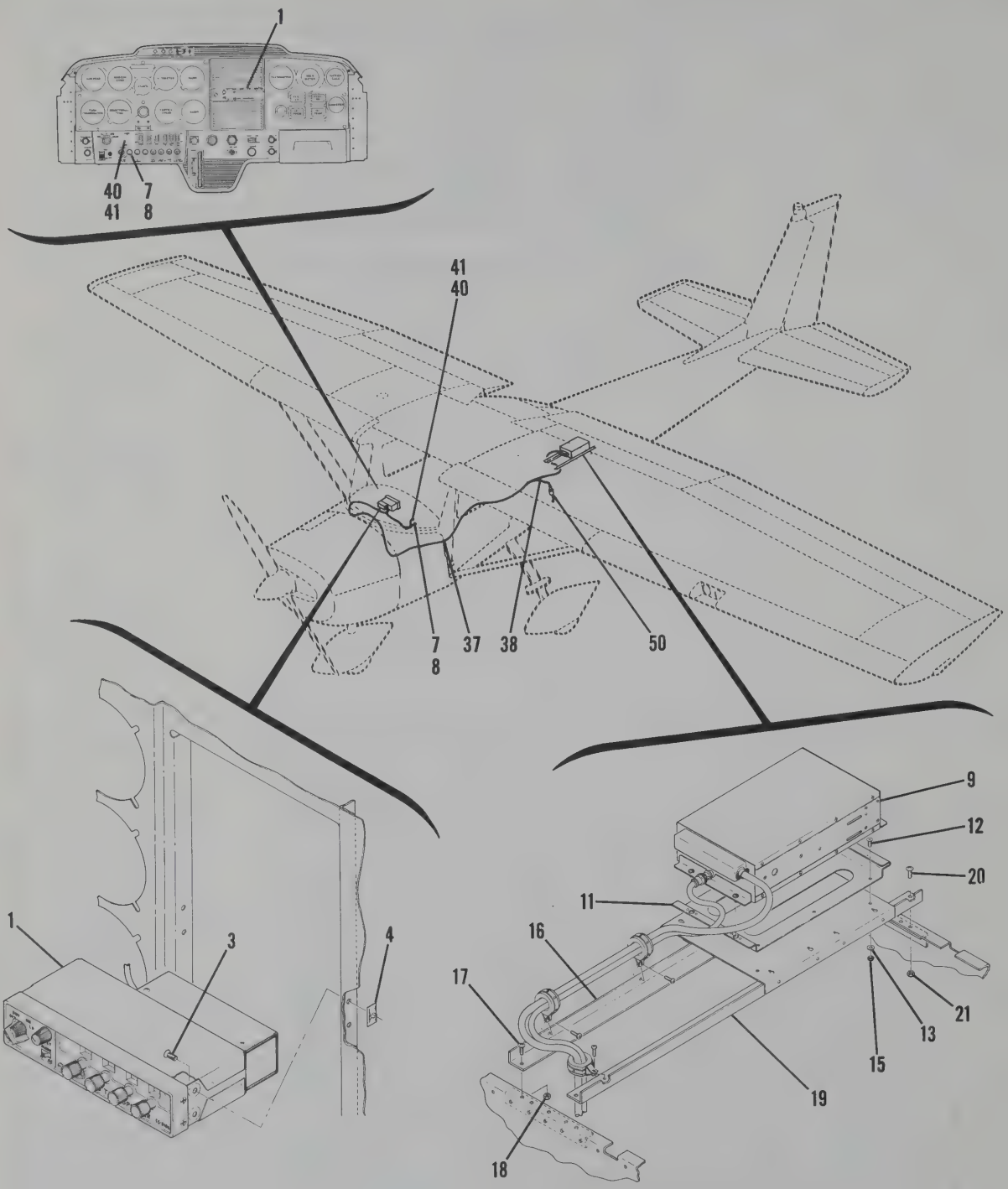

150 SERIAL 15069309 & ON
F150 SERIAL F150-0390 & ON

Figure 1-3. Cessna 300 Transponder (Type KT-75R) (Sheet 1 of 9)

CESSNA 300 TRANSPONDER RADIO INSTALLATION

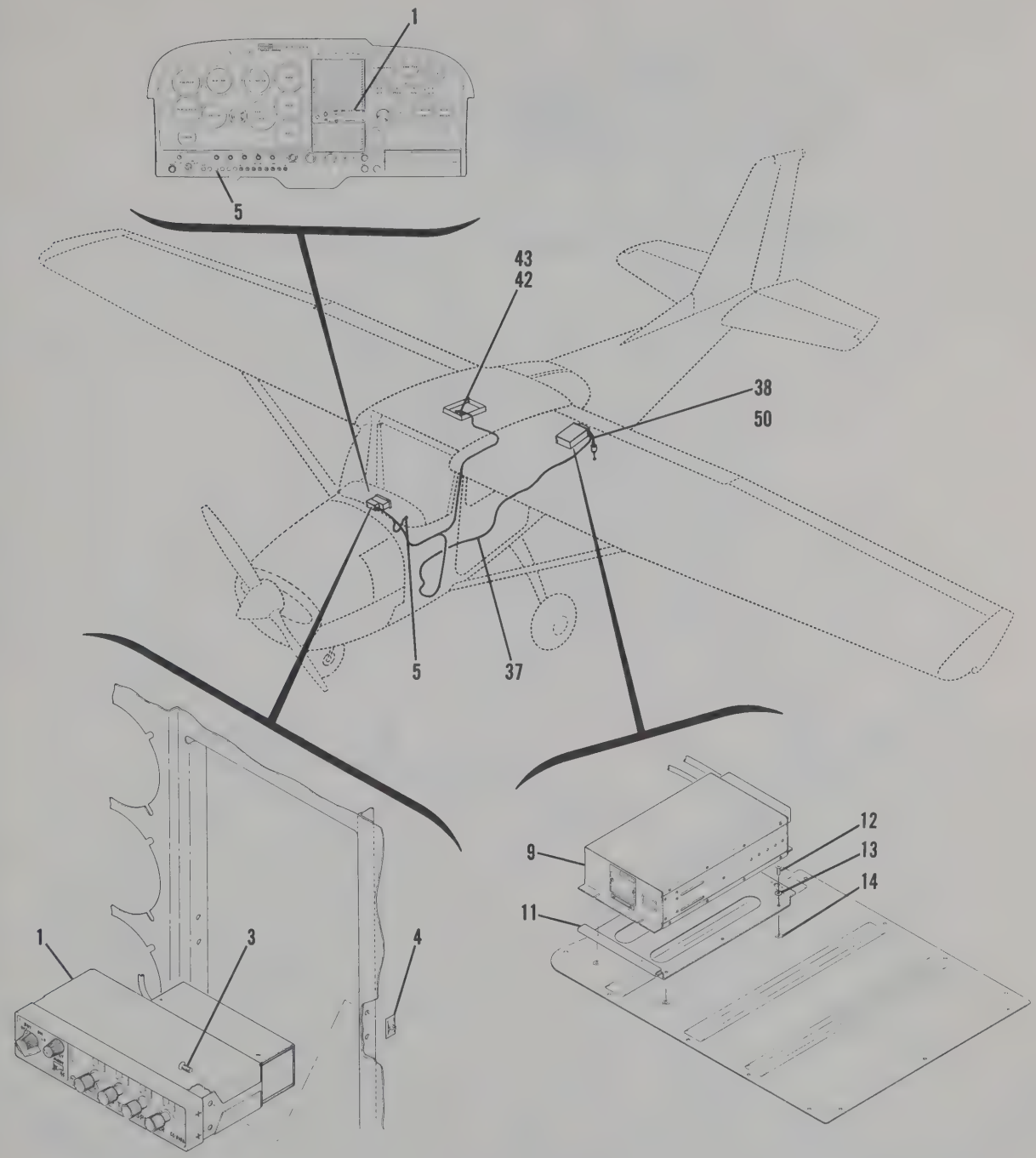

172 SERIAL 17257162 & ON
F172 SERIAL F172-0560 & ON
FR172 SERIAL FR172-0061 & ON

Figure 1-3. Cessna 300 Transponder (Type KT-75R) (Sheet 2 of 9)

CESSNA 300 TRANSPONDER RADIO INSTALLATION

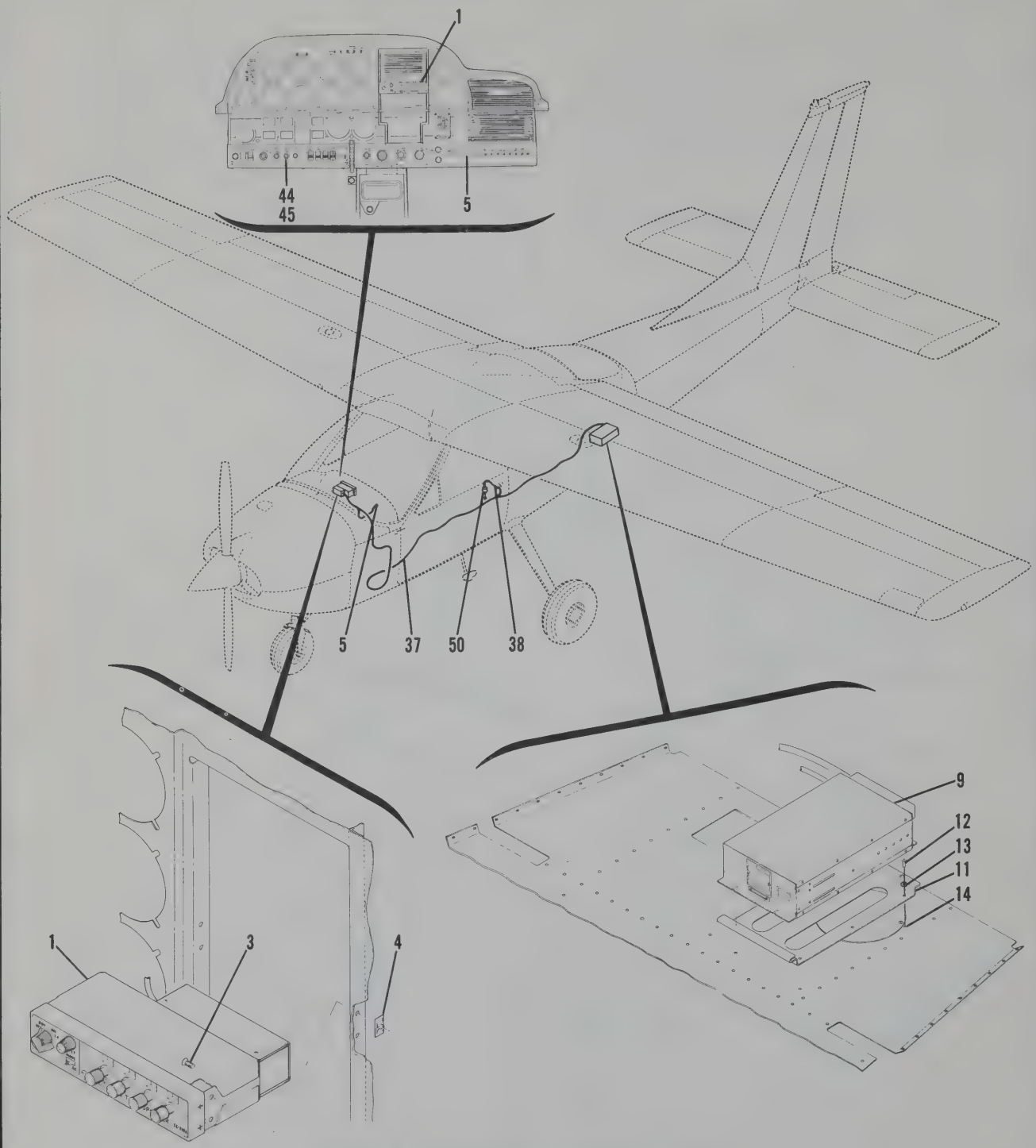

177 SERIAL 17701165 & ON

Figure 1-3. Cessna 300 Transponder (Type KT-75R) (Sheet 3 of 9)

CESSNA 300 TRANSPONDER RADIO INSTALLATION

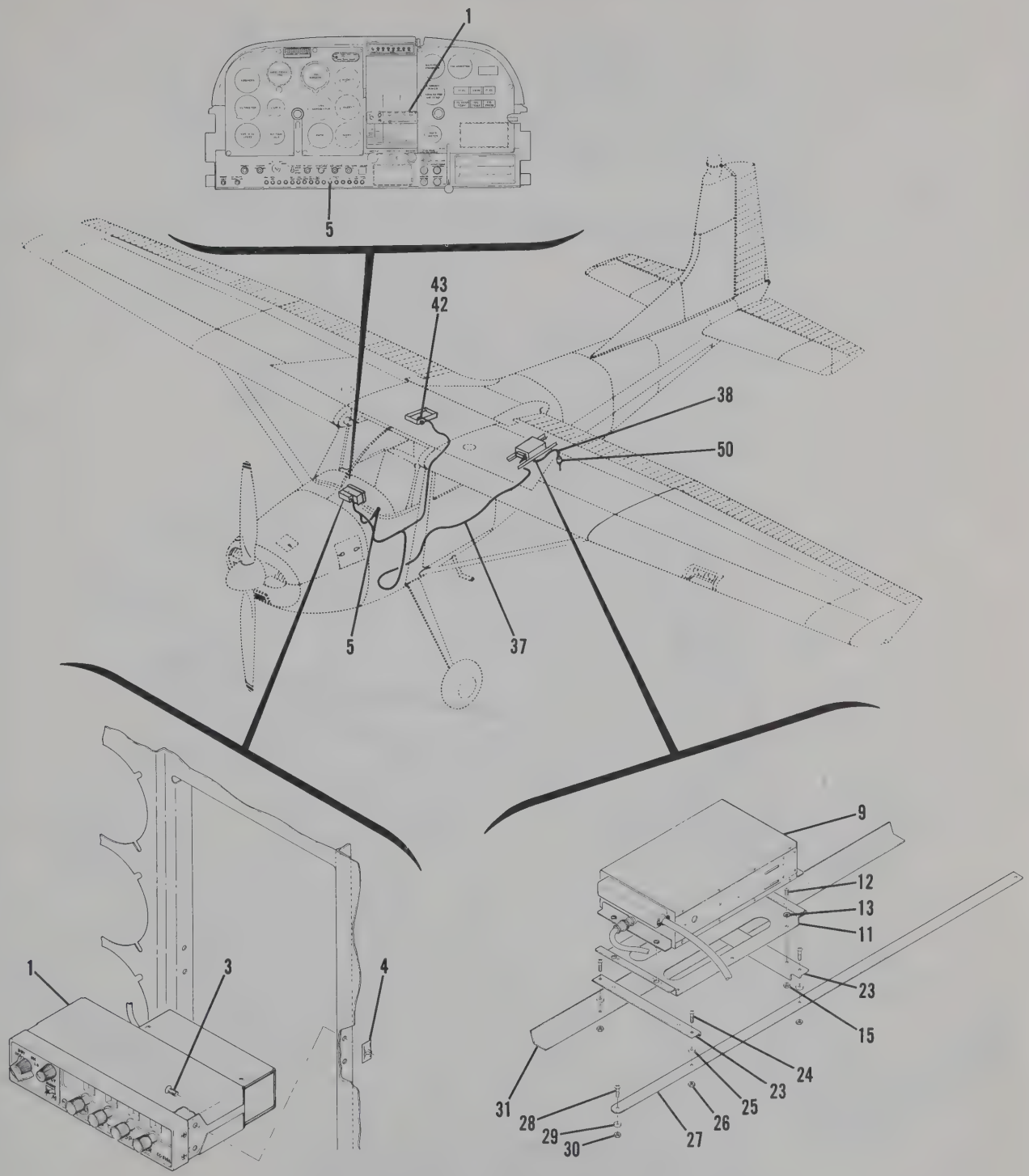

180 SERIAL 18051994 & ON
185 SERIAL 185-1448 & ON

Figure 1-3. Cessna 300 Transponder (Type KT-75R) (Sheet 4 of 9)

CESSNA 300 TRANSPONDER RADIO INSTALLATION

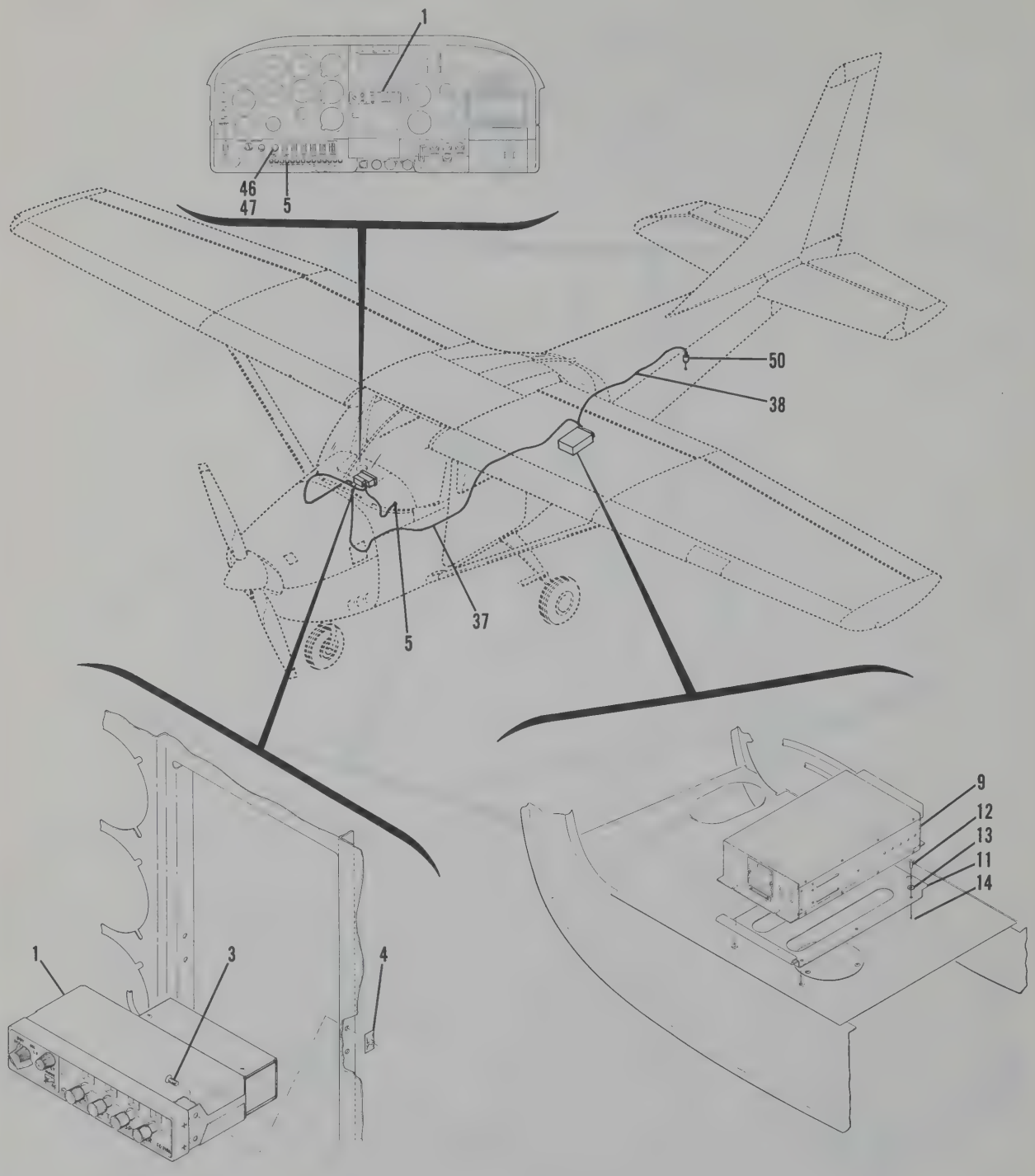

182 SERIAL 18259306 & ON
A182 SERIAL A182-0117 & ON

Figure 1-3. Cessna 300 Transponder (Type KT-75R) (Sheet 5 of 9)

CESSNA 300 TRANSPONDER RADIO INSTALLATION

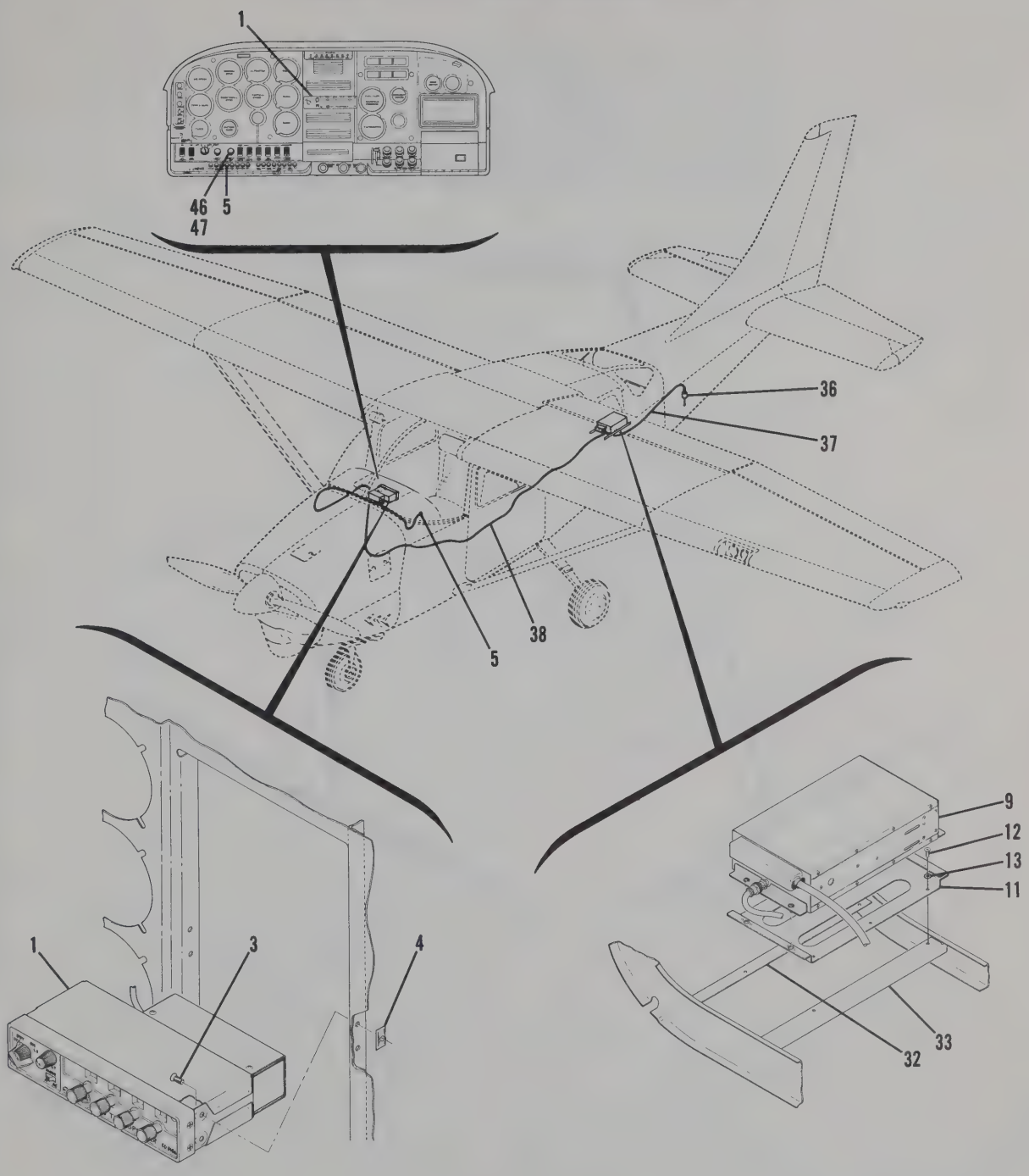

P206 SERIAL P206-0520 & ON
U206 SERIAL U206-1235 & ON
TP206 SERIAL TP206-0520 & ON
TU206 SERIAL TU206-1235 & ON

Figure 1-3. Cessna 300 Transponder (Type KT-75R) (Sheet 6 of 9)

CESSNA 300 TRANSPONDER RADIO INSTALLATION

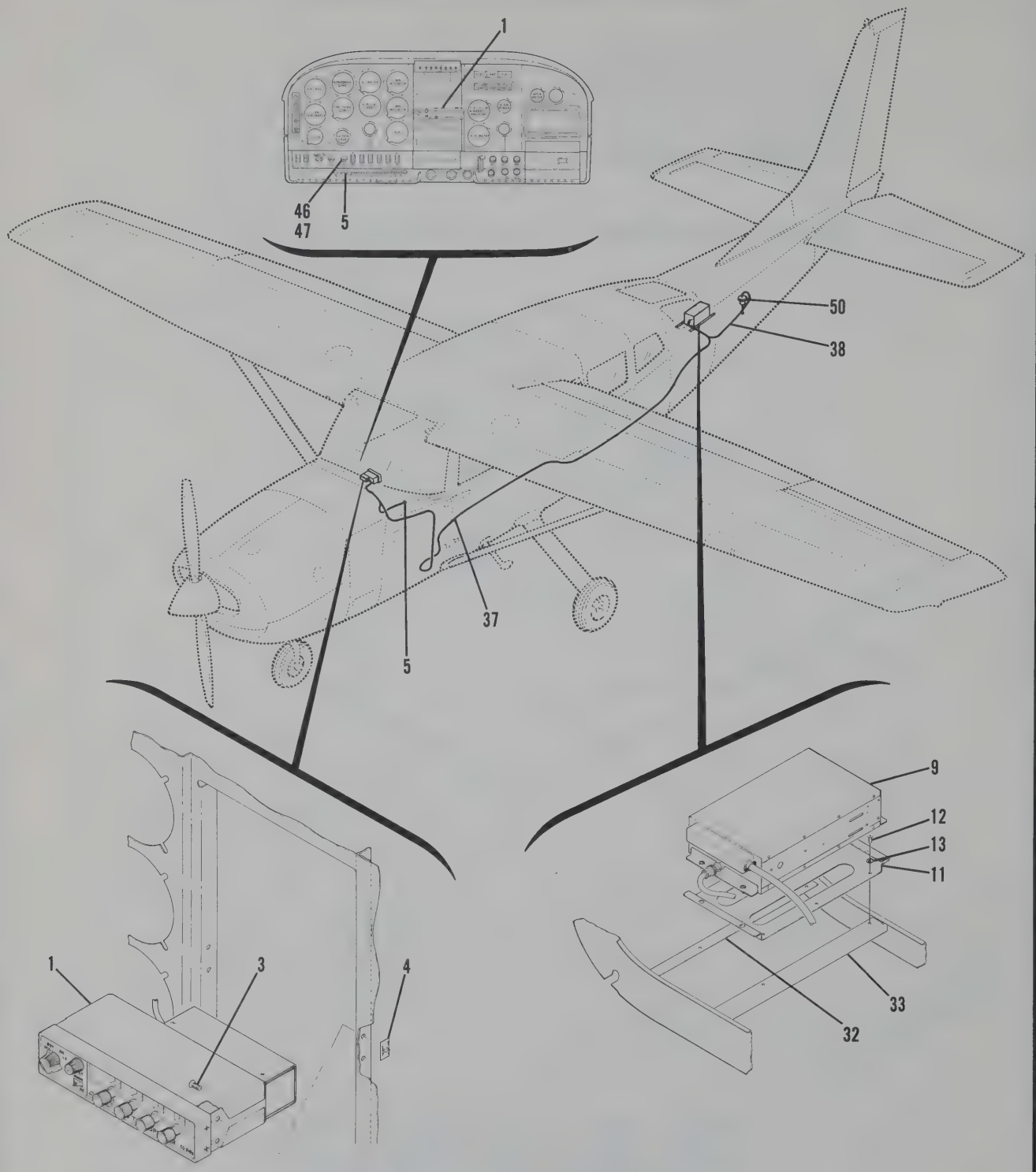

207 SERIAL 20700001 & ON
T207 SERIAL 20700001 & ON

Figure 1-3. Cessna 300 Transponder (Type KT-75R) (Sheet 7 of 9)

CESSNA 300 TRANSPONDER RADIO INSTALLATION

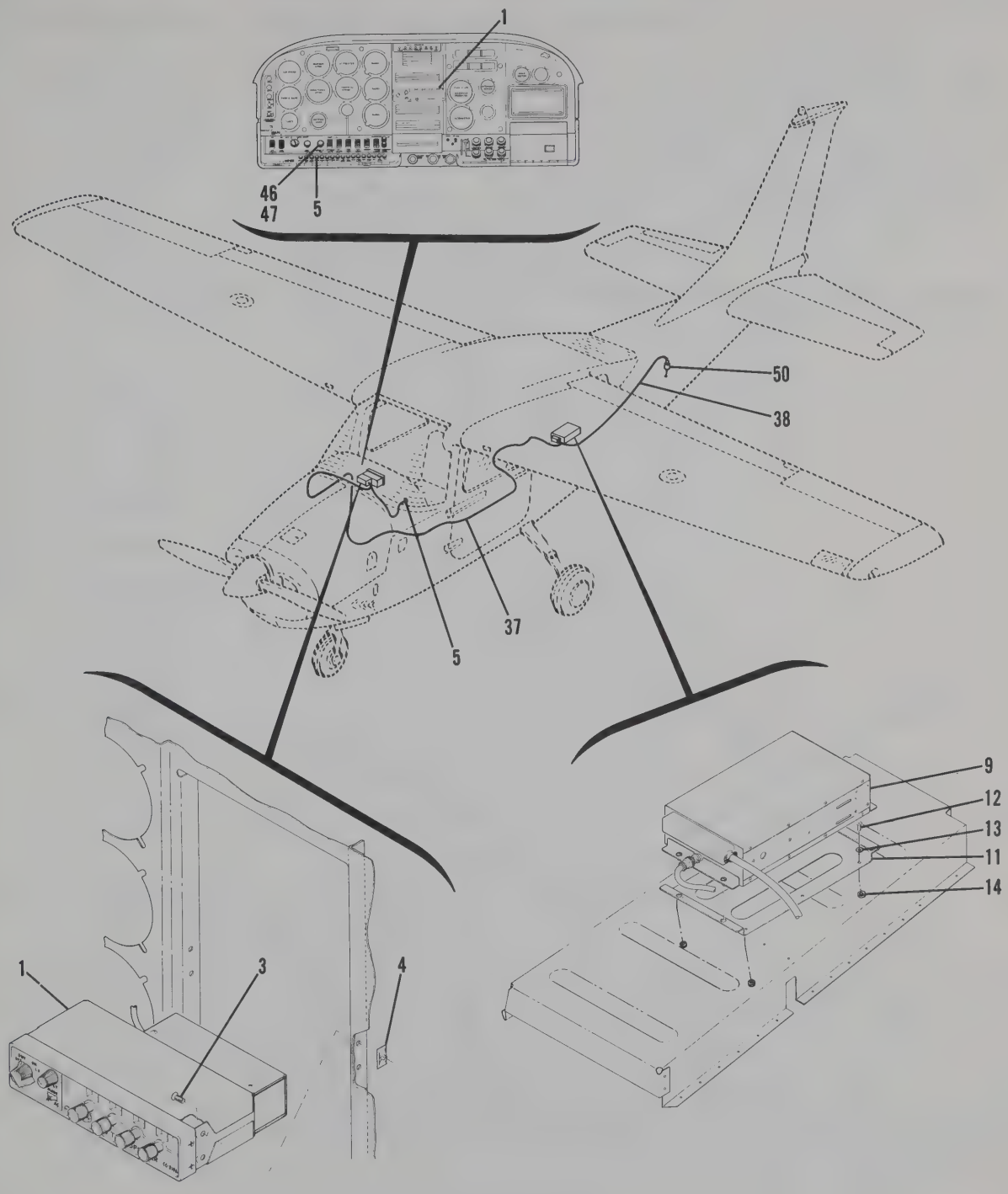

210 SERIAL 21059062 & ON
T210 SERIAL T210-0393 & ON

Figure 1-3. Cessna 300 Transponder (Type KT-75R) (Sheet 8 of 9)

CESSNA 300 TRANSPONDER RADIO INSTALLATION

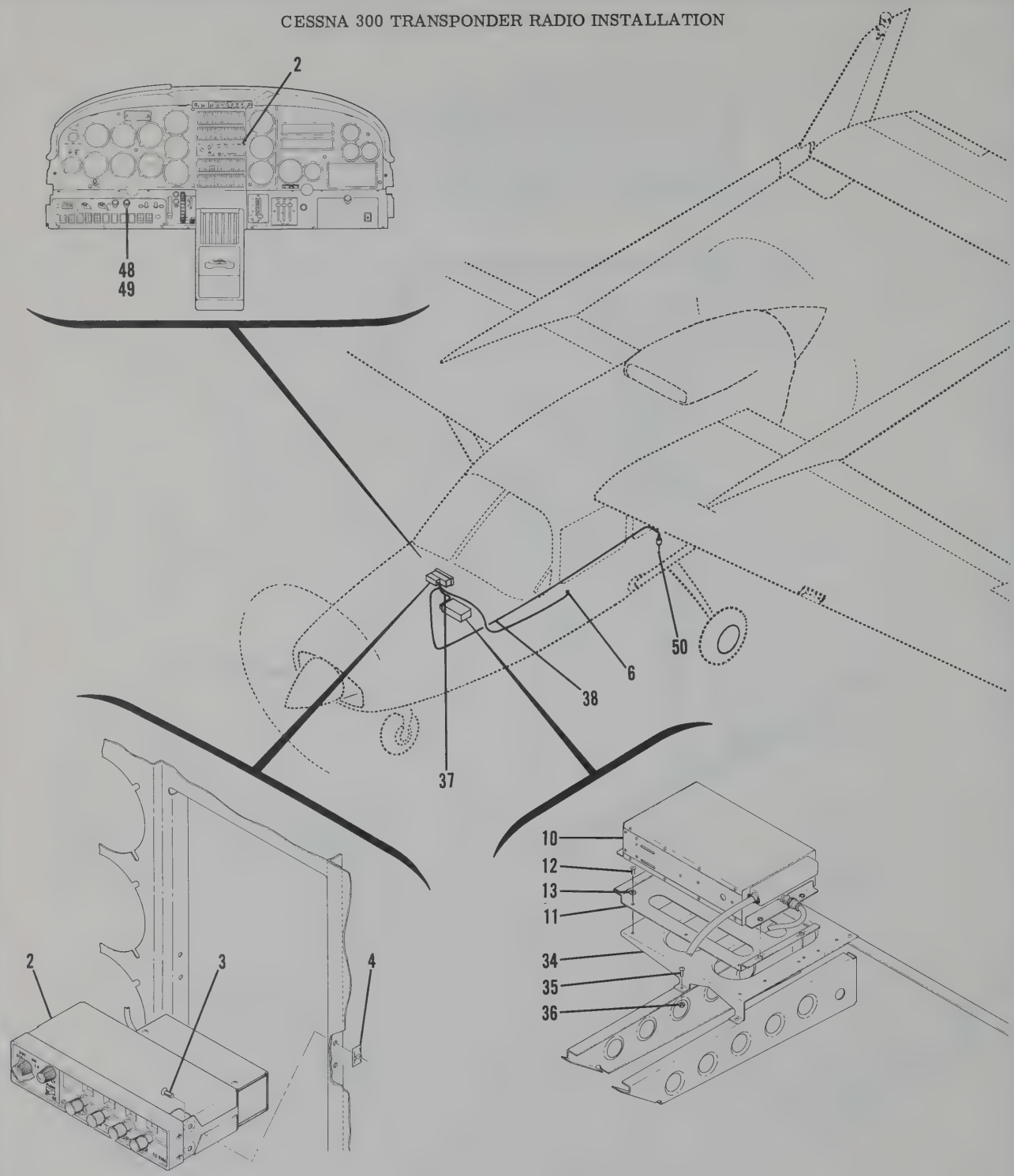

337 SERIAL 337-0979 & ON
T337 SERIAL T337-0979 & ON

Figure 1-3. Cessna 300 Transponder (Type KT-75R) (Sheet 9 of 9)

FIGURE AND INDEX NO.	PART NUMBER	DESCRIPTION 1 2 3 4 5 6 7	UNITS PER ASSY	USABLE ON CODE
1-3-		CESSNA 300 TRANSPONDER RADIO INSTALLATION TYPE KT-75R -----	NP	
		ALL MODELS EXCEPT 188		
- 1	C589503-0101	CONTROL UNIT 14 VOLT SYSTEM KG ALL MODELS -------	1	
		EXCEPT 337 SERIES		
- 2	C589503-0201	CONTROL UNIT 28 VOLT SYSTEM KG 337 SERIES ONLY --	1	
		ATTACHING PARTS		
- 3	S1022Z8-8	SCREW ----------	4	
- 4	NAS446-4-3	NUT ----------	4	
		---*---		
- 5	S1360-5	CIRCUIT BREAKER ALL MODELS EXCEPT 150 & 337 SERIES ------	1	
- 6	S1360-2	CIRCUIT BREAKER 337 SERIES ONLY ----------	1	
- 7	S1091-5	FUSE 150 ONLY ----------	1	
- 8	S1C90-2	FUSE ASSY 150 ONLY ----------	1	
- 9	C589504-0101	RECEIVER-TRANSMITTER 14 VOLT SYSTEM KG ALL ------	1	
		MODELS EXCEPT 337 SERIES		
- 10	C589504-0201	RECEIVER-TRANSMITTER 28 VOLT SYSTEM KG 337 ------	1	
		SERIES ONLY		
- 11	C47-1744-01	RACK-MOUNTING SUPPLIED WITH ITEMS 7 OR 8 KG -------	REF	
		ATTACHING PARTS		
- 12	AN515-8R8	SCREW ----------	4	
- 13	AN936A8	WASHER ----------	4	
- 14	NAS1329-08-120	RIVNUT 172, 177, 182 & 210 SERIES ONLY ----------	4	
- 15	NAS679A08	NUT 150, 180, 185 ----------	4	
		---*---		
- 16	0411547-2	SUPPORT 150 ONLY ----------	1	
		ATTACHING PARTS		
- 17	AN515-8R8	SCREW ----------	2	
- 18	NAS679A08	NUT ----------	2	
		---*---		
- 19	0411547-1	SUPPORT 150 ONLY ----------	1	
		ATTACHING PARTS		
- 20	AN515-8R8	SCREW ----------	2	
- 21	NAS679A08	NUT ----------	2	
		---*---		
- 22	C47C103-1	BRACKET ASSY 150 ONLY ----------	1	
- 23	C77C713-1	ANGLE 180 & 185 ONLY ----------	2	
		ATTACHING PARTS		
- 24	AN515-8R8	SCREW ----------	4	
- 25	AN936A8	WASHER ----------	4	
- 26	NAS679A08	NUT ----------	4	
		---*---		
- 27	0770049-1	ANGLE 180 & 185 ONLY ----------	1	
		ATTACHING PARTS		
- 28	S355	SCREW ----------	2	
- 29	AN515-8R8	SPACER ----------	2	
- 30	NAS679A08	NUT ----------	2	
		---*---		
- 31	C770712-1	ANGLE 180 & 185 ONLY STD EQUIP ON AIRPLANE ----------	REF	
- 32	1270659-2	SUPPORT ASSY-RH 206 SERIES & 207 SERIES ONLY ----------	1	
- 33	1270659-1	SUPPORT ASSY-LH 206 SERIES & 207 SERIES ONLY ----------	1	
- 34	1570197-1	SUPPORT ASSY 337 & T337 ONLY ----------	1	
		ATTACHING PARTS		
- 35	AN515-8R8	SCREW ----------	5	
- 36	NAS679A08	NUT ----------	2	
		---*---		
- 37		CABLE ASSY CONTROL UNIT TO RECEIVER-TRANSMITTER ---------	NP	
	RG-174/U	COAXIAL CABLE USED ONLY WITH CESSNA 300 DME BULK --	AR	
		ITEM		
	030-2109-00	CONNECTOR CONNECTS TO RECEIVER-TRANSMITTER KG -----	1	
	030-2102-00	CONNECTOR CONNECTS TO CONTROL UNIT KG ----------	1	
- 38		CABLE ASSY RECEIVER-TRANSMITTER TO ANTENNA ----------		
	RG-58A/U	COAXIAL CABLE BULK ITEM ----------	AR	
	030-2107-00	CONNECTOR CONNECTS TO ANTENNA ----------	1	
	030-0060-00	CONNECTOR CONNECTS TO RECEIVER-TRANSMITTER ----------	1	

CONTINUED ON NEXT PAGE

FIGURE AND INDEX NO.	PART NUMBER	DESCRIPTION 1 2 3 4 5 6 7	UNITS PER ASSY	USABLE ON CODE
1-3- 39	SEE FIG 3-8	TRANSPONDER ANTENNA INSTALLATION - TYPE KA-28 ----------	1	
- 40	S1880-1	RHEOSTAT 150 ONLY ----------	1	
- 41	S1918-1	KNOB-RHEOSTAT 150 ONLY ----------	1	
- 42	C413126-5	RHEOSTAT 172, 180 & 185 ONLY ----------	1	
- 43	S1390-5	KNOB-RHEOSTAT 172, 180 & 185 ONLY ----------	1	
- 44	C413126-5	RHEOSTAT 177 ONLY ----------	1	
- 45	S1753-6	KNOB-RHEOSTAT 177 ONLY ----------	1	
	S1780-4	INSERT-KNOB 177 ONLY ----------	1	
- 46	S1880-3	RHEOSTAT 182, 206 SERIES, 207 SERIES & 210 SERIES ONLY --	1	
- 47	S1753-7	KNOB-RHEOSTAT 182, 206 SERIES, 207 SERIES & 210 SERIES -- ONLY	1	
- 48	1570164-1	SWITCH ASSY-LIGHT DIMMING 337 SERIES ONLY ----------	1	
	9341GL	RHEOSTAT CPH ----------	1	
	S1832-1	SWITCH ----------	1	
- 49	S1753-6	KNOB-RHEOSTAT 337 SERIES ONLY ----------	1	
- 50	SEE FIG 3-8	CESSNA 300 TRANSPONDER ANTENNA INSTALLATION ----------	1	

CESSNA 300 NAV/COM RADIO INSTALLATION

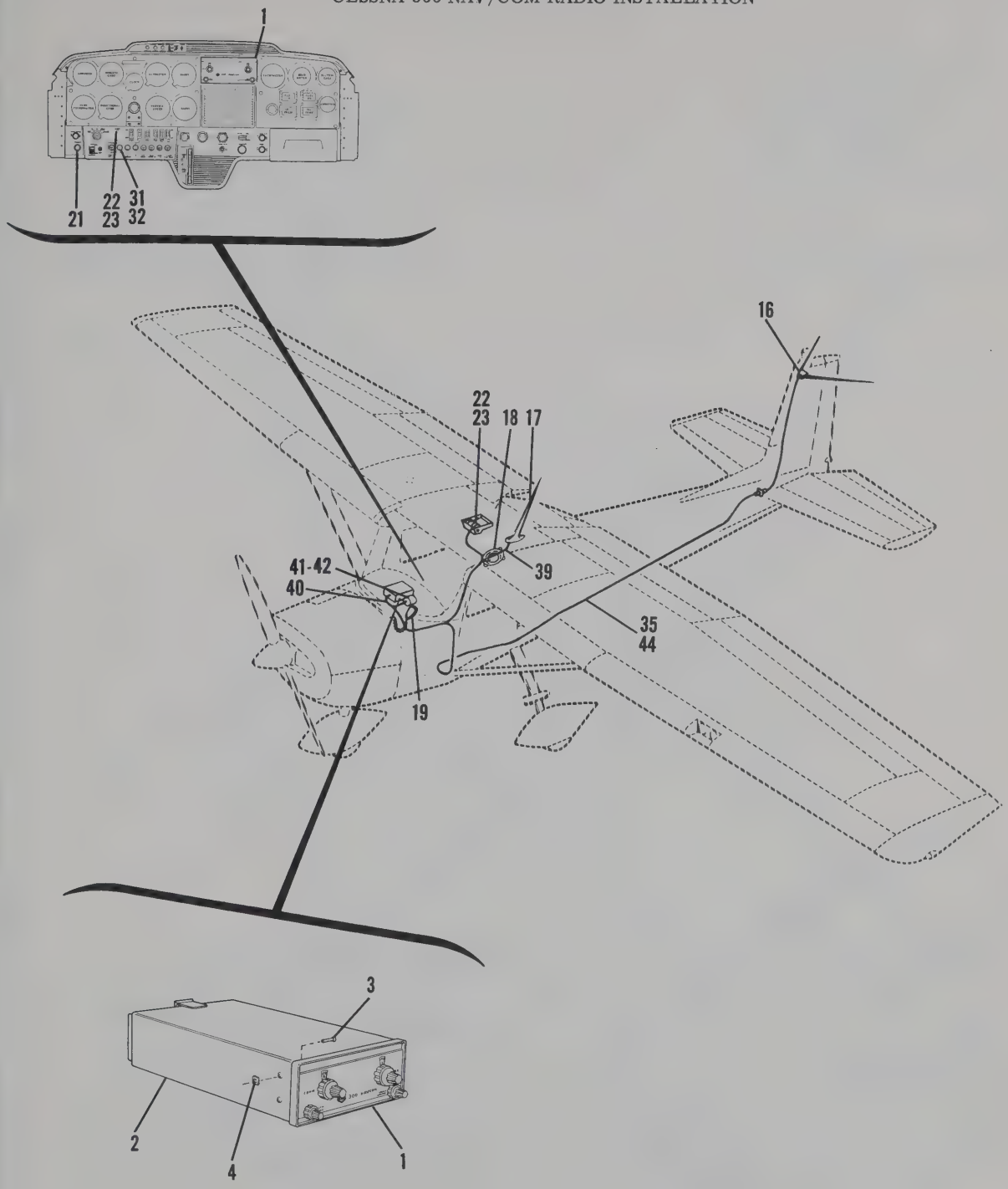

150 SERIAL 15069309 & ON
F150 SERIAL F150-0390 & ON

Figure 1-4. Cessna 300 Nav/Com (Type RT-540A or RT-517R) Radio Installation (Sheet 1 of 9)

CESSNA 300 NAV/COM RADIO INSTALLATION

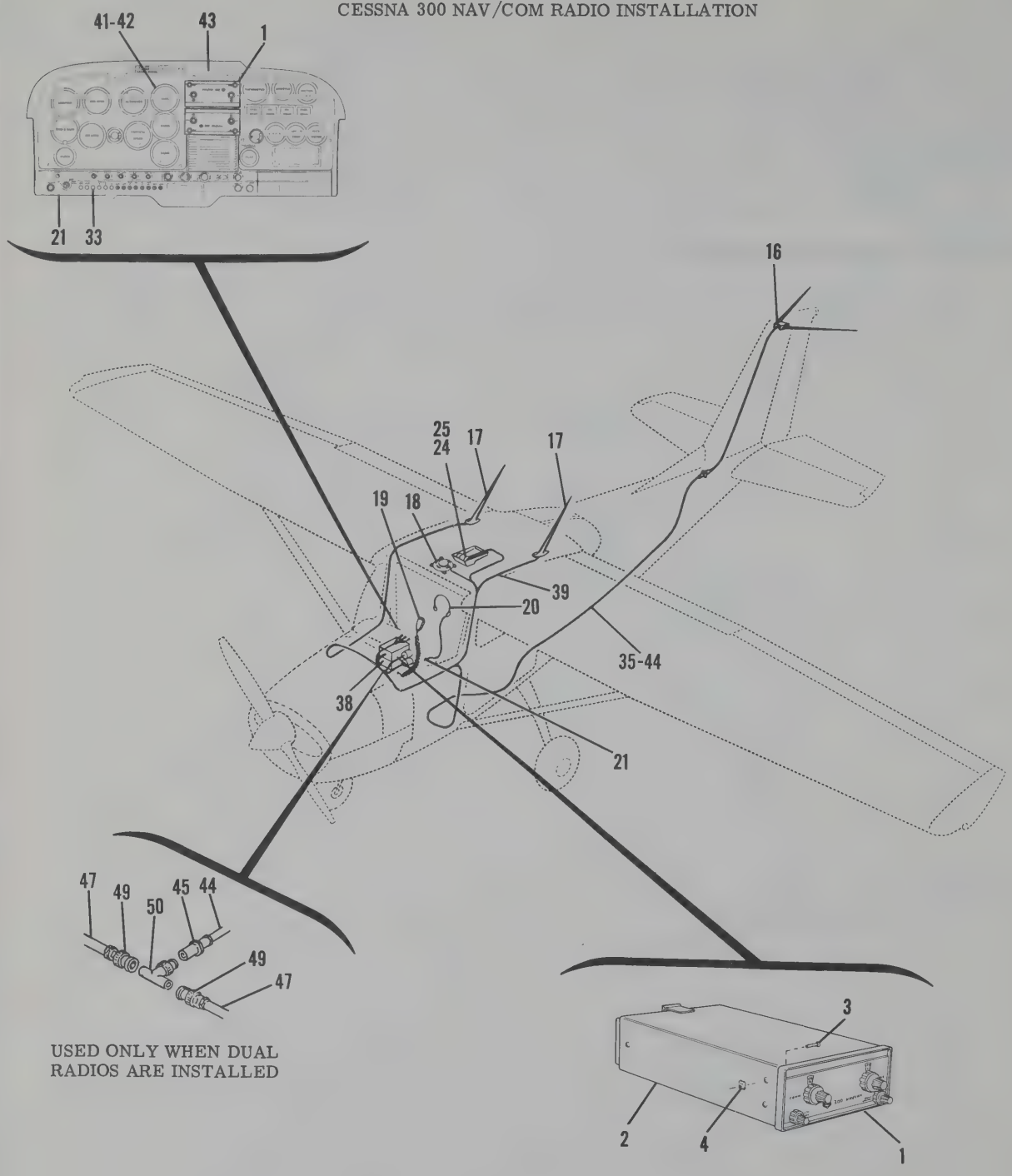

USED ONLY WHEN DUAL RADIOS ARE INSTALLED

172 SERIAL 17257162 & ON
F172 SERIAL F172-0560 & ON
FR172 SERIAL FR172-0061 & ON

Figure 1-4. Cessna 300 Nav/Com (Type RT-540A or RT-517R) Radio Installation (Sheet 2 of 9)

CESSNA 300 NAV/COM RADIO INSTALLATION

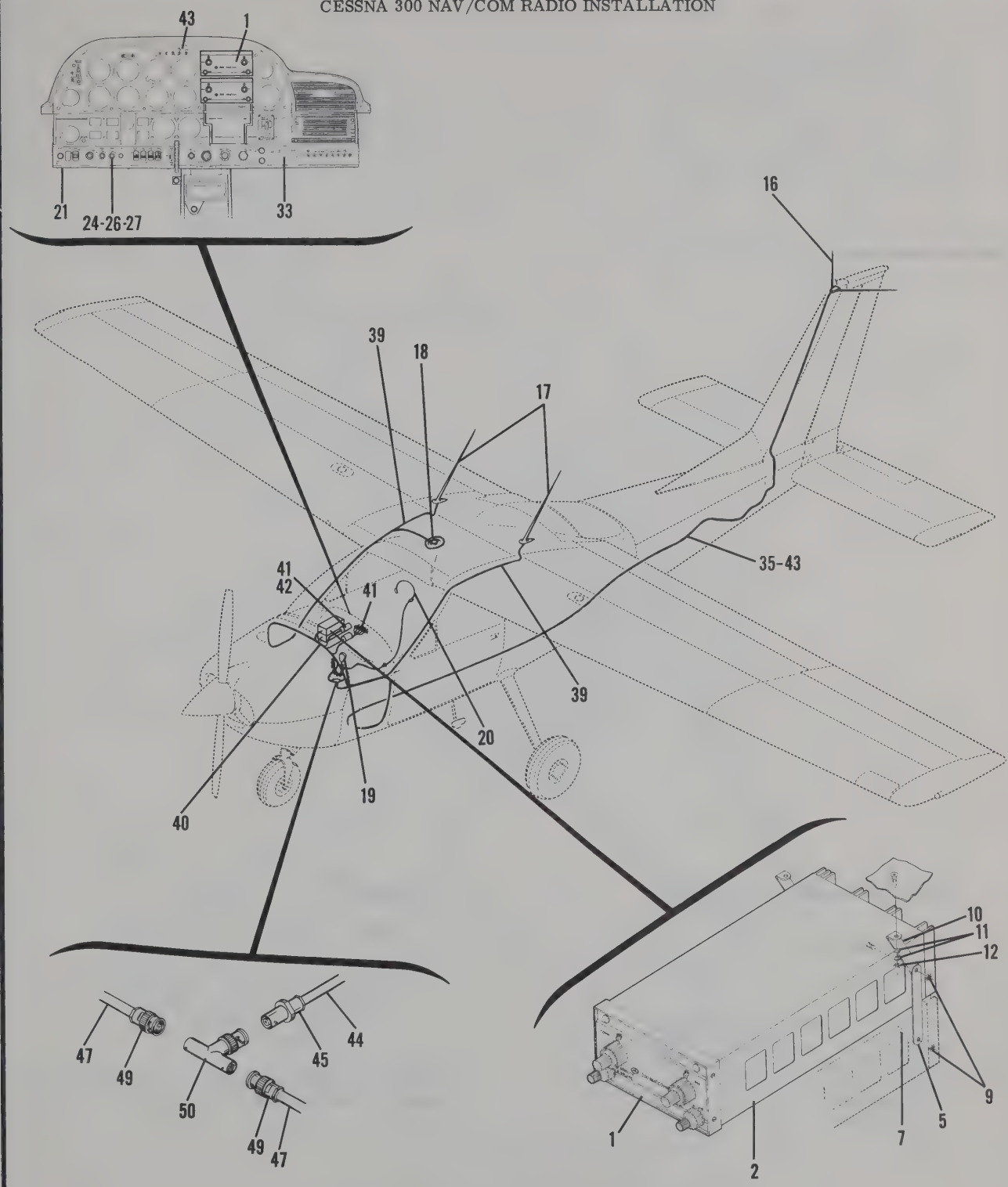

177 SERIAL 17701165 & ON

Figure 1-4. Cessna 300 Nav/Com (Type RT-540A or RT-517R) Radio Installation (Sheet 3 of 9)

CESSNA 300 NAV/COM RADIO INSTALLATION

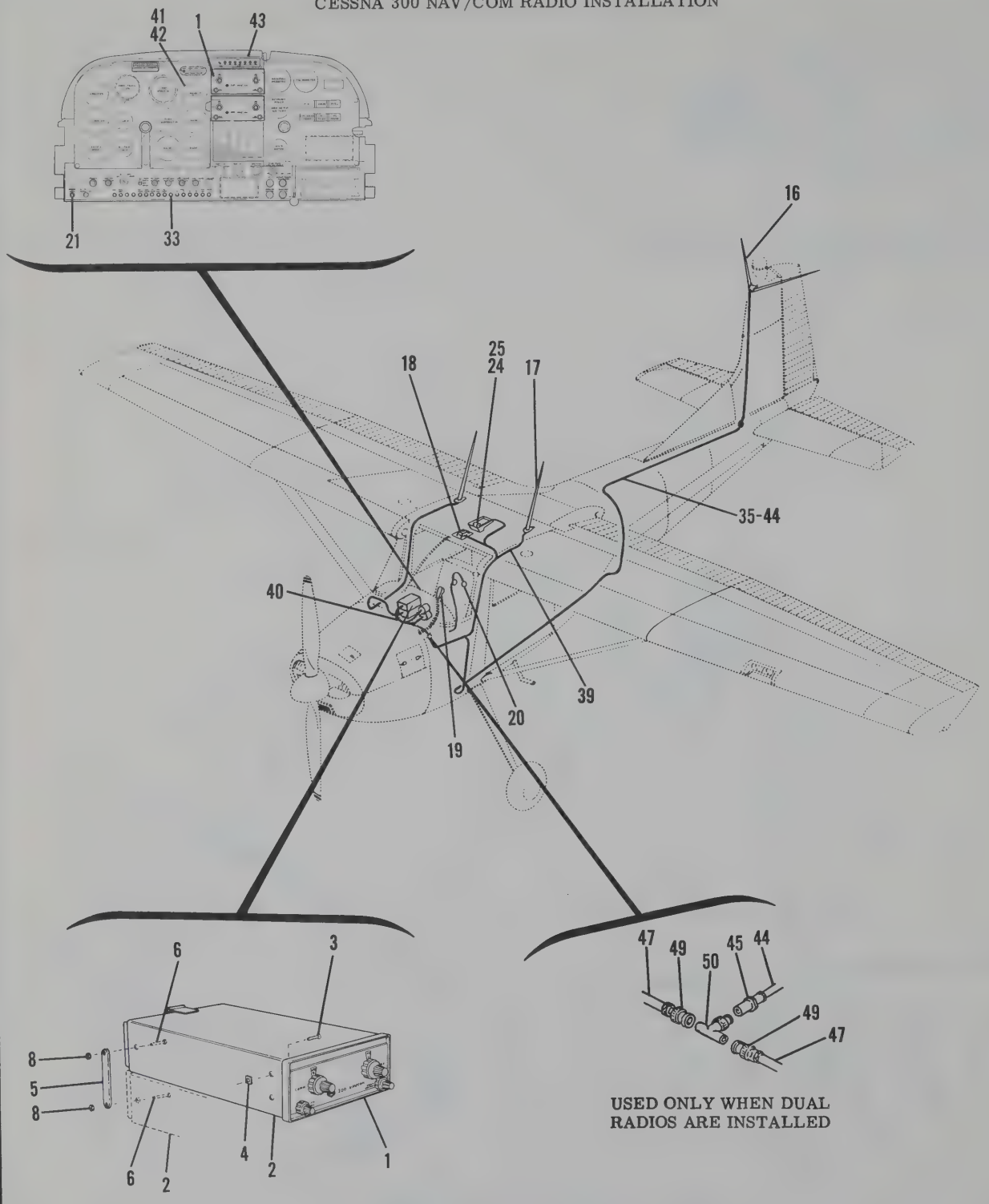

180 SERIAL 18051994 & ON
185 SERIAL 185-1448 & ON

Figure 1-4. Cessna 300 Nav/Com (Type RT-540A or RT-517R) Radio Installation (Sheet 4 of 9)

CESSNA 300 NAV/COM RADIO INSTALLATION

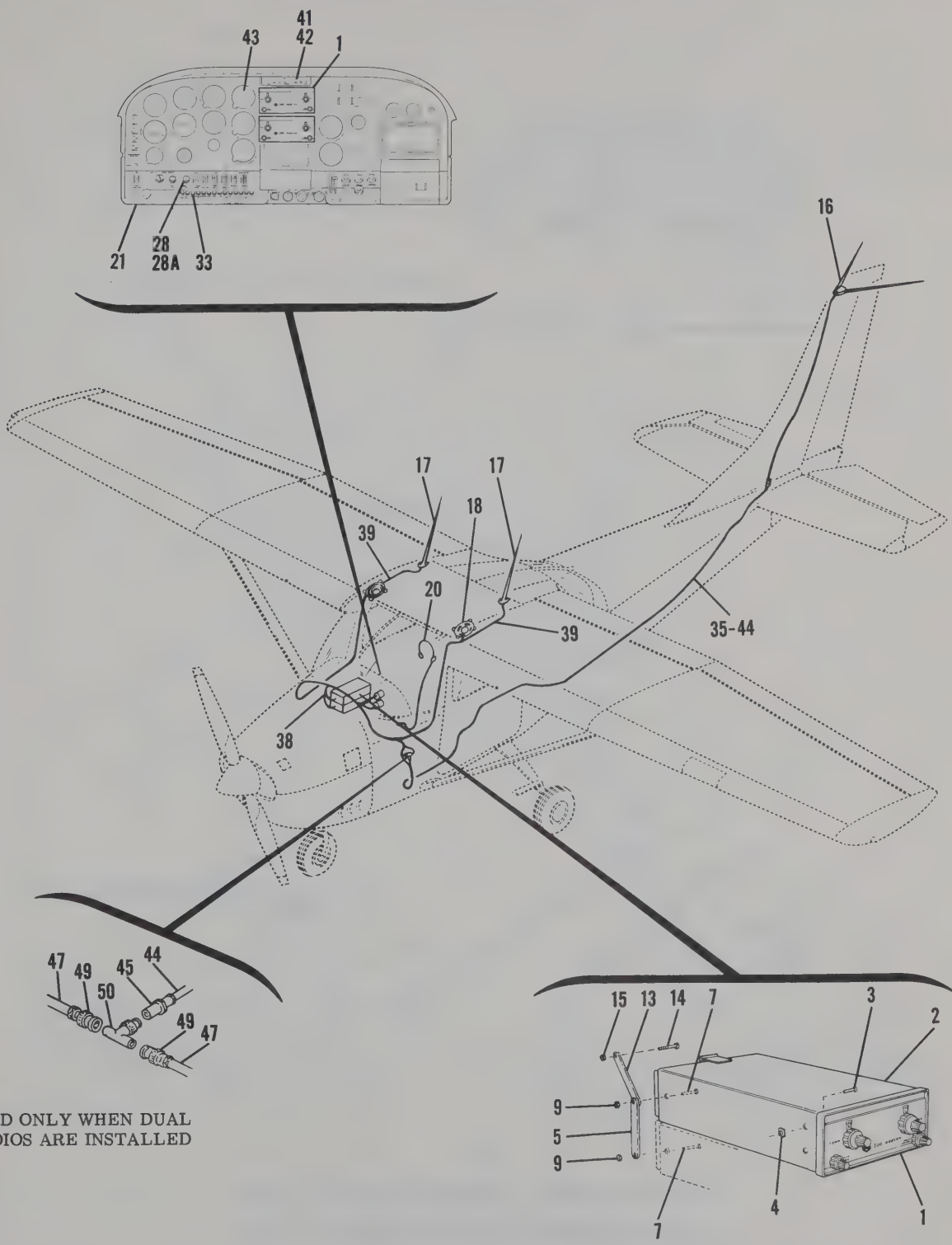

USED ONLY WHEN DUAL RADIOS ARE INSTALLED

182 SERIAL 18259306 & ON
A182 SERIAL A182-0117 & ON

Figure 1-4. Cessna 300 Nav/Com (Type RT-540A or RT-517R) Radio Installation (Sheet 5 of 9)

CESSNA 300 NAV/COM RADIO INSTALLATION

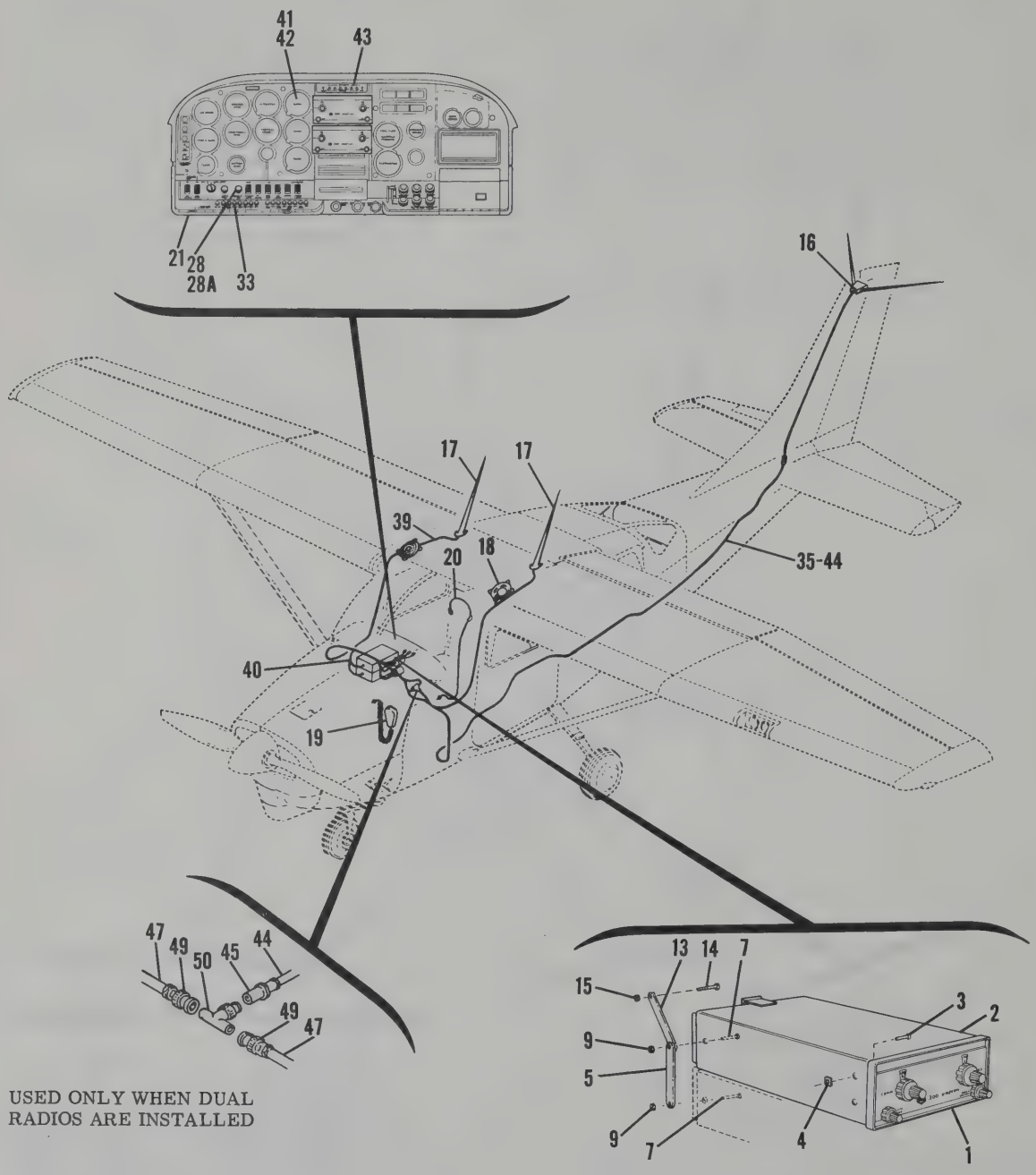

USED ONLY WHEN DUAL RADIOS ARE INSTALLED

P206 SERIAL P206-0520 & ON
U206 SERIAL U206-1235 & ON
TP206 SERIAL TP206-0520 & ON
TU206 SERIAL TU206-1235 & ON

Figure 1-4. Cessna 300 Nav/Com (Type RT-540A or RT-517R) Radio Installation (Sheet 6 of 9)

CESSNA 300 NAV/COM RADIO INSTALLATION

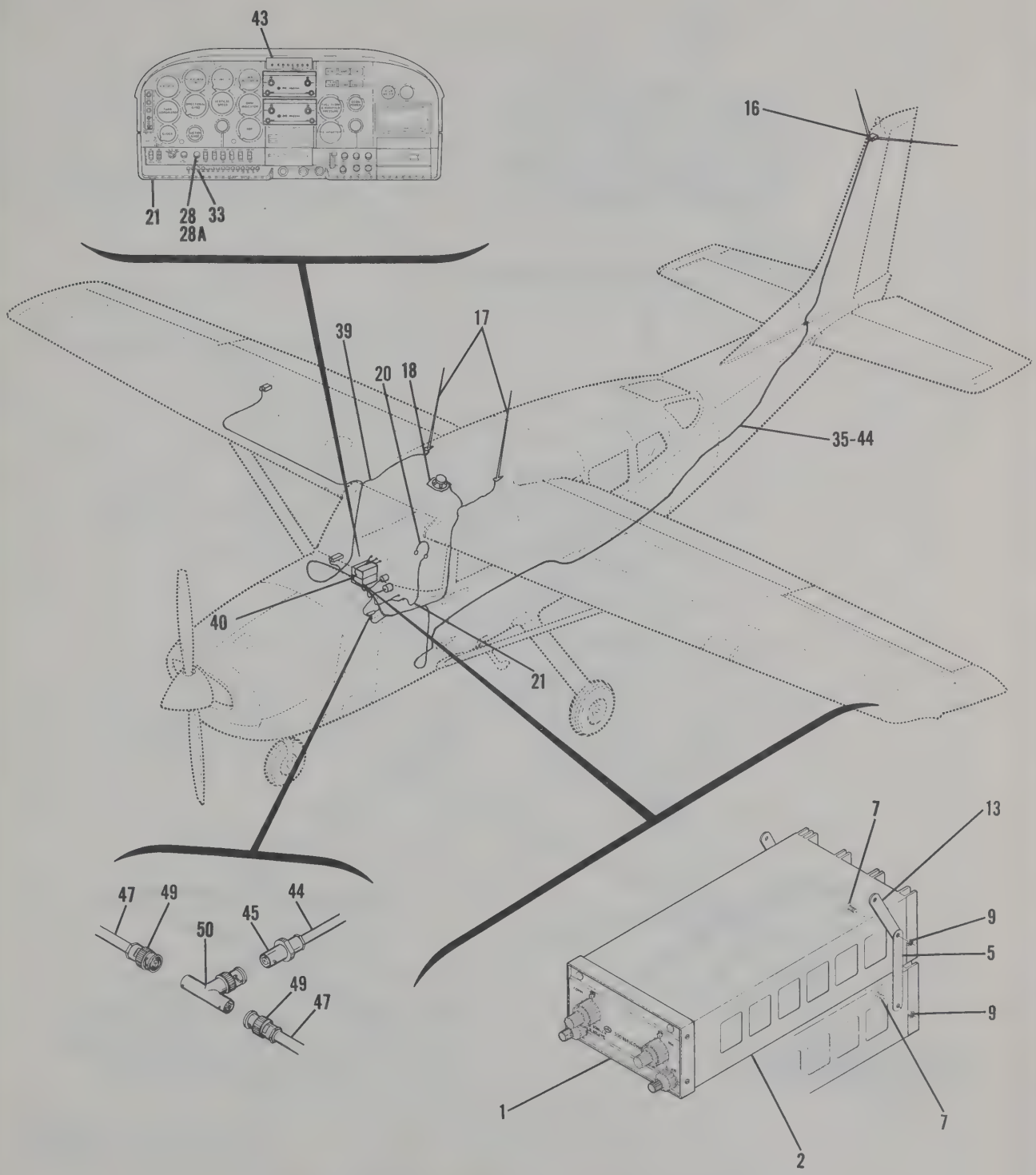

207 SERIAL 20700001 & ON
T207 SERIAL 20700001 & ON

Figure 1-4. Cessna 300 Nav/Com (Type RT-540A or RT-517R) Radio Installation (Sheet 7 of 9)

CESSNA 300 NAV/COM RADIO INSTALLATION

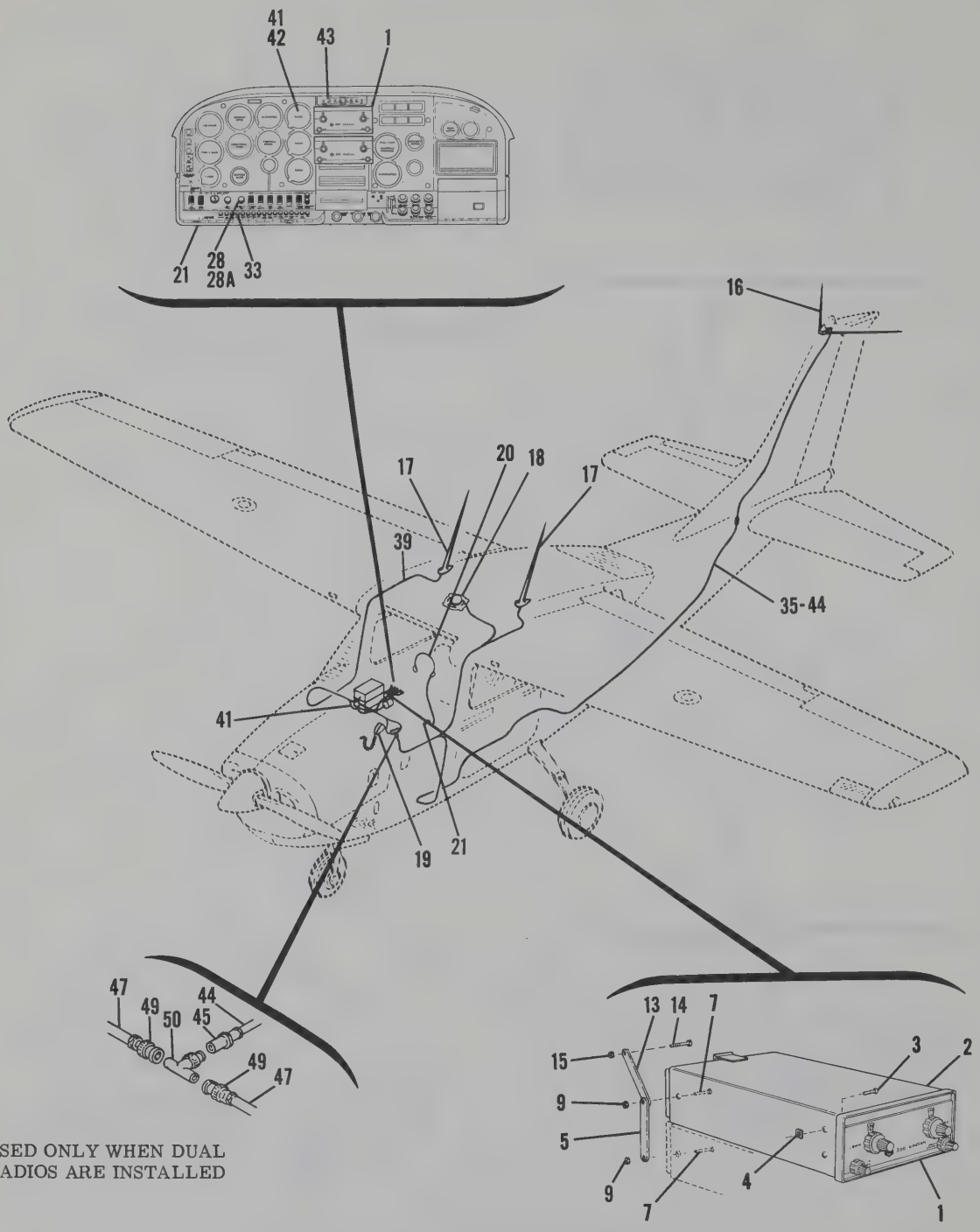

USED ONLY WHEN DUAL RADIOS ARE INSTALLED

210 SERIAL 21059062 & ON
T210 SERIAL T210-0393 & ON

Figure 1-4. Cessna 300 Nav/Com (Type RT-540A or RT-517R) Radio Installation (Sheet 8 of 9)

CESSNA 300 NAV/COM RADIO INSTALLATION

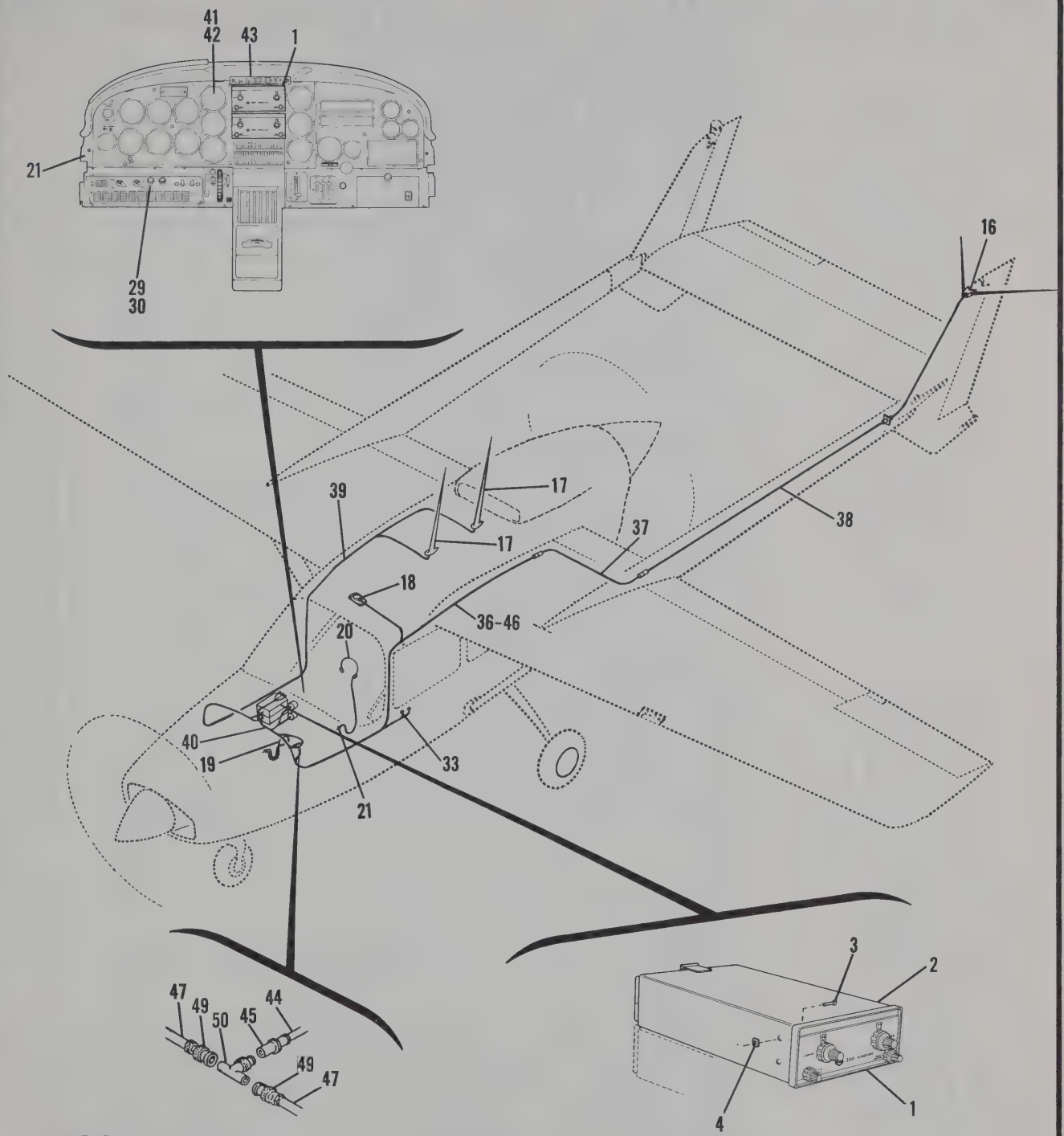

USED ONLY WHEN DUAL RADIOS ARE INSTALLED

337 SERIAL 337-0979 & ON
T337 SERIAL T337-0979 & ON

Figure 1-4. Cessna 300 Nav/Com (Type RT-540A or RT-517R) Radio Installation (Sheet 9 of 9)

FIGURE AND INDEX NO.	PART NUMBER	DESCRIPTION 1 2 3 4 5 6 7	UNITS PER ASSY	USABLE ON CODE
1-4-		CESSNA 300 NAV/COM - TYPES RT-517R OR RT-540A RADIO	NP	
		INSTALLATION ALL MODELS EXCEPT 188 THE RT-517R IS NOT INSTALLED ON THE 337 & T337		
- 1		CESSNA 300 NAV/COM TRANSCEIVERS - REMOTE INDICATOR	NP	
	36120-1114	TRANSCEIVER-90 CHANNEL - 14 VOLT - TYPE RT-517R	AR	
	37600-1114	TRANSCEIVER-360 CHANNEL - 14 VOLT - TYPE RT-540A	AR	
		INCLUDES G.S. AND DME SWITCHING WAFERS AND RECEPTACLE FOR WIRE HARNESS ARC		
	37600-1128	TRANSCEIVER-360 CHANNEL-28 VOLT-TYPE RT-540A	AR	
		INCLUDES G.S. AND DME SWITCHING WAFERS AND RECEPTACLE FOR WIRE HARNESS ARC		
- 2	32570-0000	MOUNTING - TYPE M-514R ARC	1	
	32604-0000	PLUG SUPPLIED WITH MOUNTING - USED WHEN TYPE IN-514R INDICATOR IS INSTALLED ARC	1	
	MS3057-10A	CLAMP SUPPLIED WITH MOUNTING - USED WHEN THE TYPE IN-514R INDICATOR IS INSTALLED	1	
	18397-0000	CONNECTOR REPLACES 32604 WHEN TYPE IN-525 GLIDE SLOPE INDICATOR IS INSTALLED ARC	1	
	MS3057-12A	CLAMP USED WITH 18397-0000 CONNECTOR WHEN TYPE IN-525A GLIDE SLOPE INDICATOR IS INSTALLED	1	
		ATTACHING PARTS		
- 3	AN507-632R8	SCREW	2	
- 4	NAS679A06	NUT	2	
		---*---		
- 5	1270465-3	SUPPORT STRAP 177, 180, 182, 185, 206 SERIES, 207 SERIES & 210 SERIES ONLY	1	
		ATTACHING PARTS		
- 6	S1022Z8-8	SCREW 172, 180 & 185 ONLY	2	
- 7	AN507-632R8	SCREW 177, 182, 206 SERIES, 207 SERIES & 210 SERIES ONLY	2	
- 8	NAS395-16-3	NUT 172, 180 & 185 ONLY	2	
- 9	NAS679A06	NUT 177, 182, 206 SERIES, 207 SERIES & 210 SERIES ONLY	2	
		---*---		
- 10	1713125-1	SUPPORT STRAP 177 ONLY	2	
		ATTACHING PARTS		
- 11	AN960-8	WASHER	AR	
- 12	NAS679A08	NUT	2	
		---*---		
- 13	1270465-1	SUPPORT STRAP 182, 206 SERIES, 207 SERIES & 210 SERIES ONLY	2	
		ATTACHING PARTS		
- 14	AN515-6R6	SCREW	4	
- 15	NAS679A06	NUT	4	
		---*---		
- 16	SEE FIG 3-2	OMNI ANTENNA INSTALLATION	1	
- 17	SEE FIG 3-1	VHF ANTENNA INSTALLATION	1	
	SEE FIG 5-1	RADIO COOLING INSTALLATION	1	
- 18	SEE FIG 4-2	SPEAKER INSTALLATION	1	
- 19	SEE FIG 4-3	MICROPHONE INSTALLATION	1	
- 20	SEE FIG 4-4	HEADSET INSTALLATION	1	
- 21	SEE FIG 4-4	PHONE JACK ALL MODELS EXCEPT 150	1	
- 22	S1880-1	RHEOSTAT 150 ONLY	1	
- 23	S1918-1	KNOB-RHEOSTAT 150 ONLY	1	
- 24	C413126-5	RHEOSTAT 172, 177, 180 & 185 ONLY	1	
- 25	S1390-5	KNOB-RHEOSTAT 172, 180 & 185 ONLY	1	
- 26	S1753-6	KNOB-RHEOSTAT 177 ONLY	1	
- 27	S1780-4	INSERT-RHEOSTAT KNOB 177 ONLY	1	
- 28	S1880-3	RHEOSTAT 182, 206 SERIES 207 SERIES & 210 SERIES ONLY	1	
-28A	S1753-7	KNOB-RHEOSTAT 182, 206 SERIES 207 SERIES & 210 SERIES ONLY	1	
- 29	157C164-1	SWITCH ASSY-RADIO LIGHT DIM 337 SERIES ONLY	1	
	9341GL	RHEOSTAT CPH	1	
	S1832-1	SWITCH	1	
- 30	S1753-6	KNOB-RHEOSTAT 337 ONLY	1	
- 31	S1091-15	FUSE 150 ONLY	1	
- 32	S1090-4	FUSE HOLDER ASSY 150 ONLY	1	
- 33	S1360-15	CIRCUIT BREAKER 172, 177, 180, 182, 185, 206 SERIES, 207 SERIES & 210 SERIES ONLY	1	
- 34	S1360-8	CIRCUIT BREAKER 337 SERIES ONLY	1	

CONTINUED ON NEXT PAGE

FIGURE AND INDEX NO.	PART NUMBER	DESCRIPTION 1 2 3 4 5 6 7	UNITS PER ASSY	USABLE ON CODE
1-4-	36300-0000	GLIDE SLOPE PIGTAIL KIT ARC	1	
- 35		CABLE ASSY - TRANSCEIVER TO BALUN STUB ALL MODELS EXCEPT 337 SERIES	NP	
	RG-58A/U	COAXIAL CABLE-BULK ITEM	AR	
	UG-291/U	JACK-COAXIAL - CONNECTS TO BALUN STUB CONNECTOR 150, 172 & 177 ONLY	1	
	UG-88C/U	PLUG-COAXIAL - CONNECTS TO BALUN STUB CONNECTOR 180, 182, 185, 206 SERIES, 207 SERIES AND 210 SERIES ONLY	1	
	UG-1050/U	CONNECTOR-COAXIAL - CONNECTS TO TRANSCEIVER	1	
- 36		CABLE ASSY - TRANSCEIVER TO OMNI CABLE CONNECTION AT WING ROOT 337 & T337	NP	
	RG-58A/U	COAXIAL CABLE - BULK ITEM	AR	
	UG-1050/U	CONNECTOR-COAXIAL - CONNECTS TO TRANSCEIVER	1	
	UG-88C/U	PLUG-COAXIAL - CONNECTS TO WING ROOT CONNECTION	1	
- 37		CABLE ASSY - WING ROOT TO BOOM CONNECTION - SUPPLIED ON AIRCRAFT AS STANDARD EQUIPMENT 337 SERIES ONLY	NP	
	RG-58A/U	COAXIAL CABLE - BULK ITEM	AR	
	UG-88C/U	PLUG-COAXIAL	1	
	UG-89/U	RECEPTACLE-COAXIAL	1	
- 38		CABLE ASSY - BOOM CONNECTION TO BALUN STUB 337 SERIES ONLY	NP	
	RG-58A/U	COAXIAL CABLE - BULK ITEM	AR	
	UG-89/U	RECEPTACLE-COAXIAL	1	
	UG-88C/U	PLUG-COAXIAL	1	
- 39		CABLE ASSY - TRANSCEIVER TO VHF ANTENNA	NP	
	RG-58A/U	COAXIAL CABLE - BULK ITEM	AR	
	UG-88C/U	PLUG-COAXIAL - ANT END 150, 172, 177, 180, 185, 337 SERIES ONLY	1	
	UG-913/U	PLUG-COAXIAL - RIGHT ANGLE - ANT END 182, 206 SERIES, 207 SERIES & 210 SERIES ONLY	1	
	UG-1051/U	CONNECTOR-COAXIAL - CONNECTS TO TRANSCEIVER	1	
- 40		CABLE ASSY - MAIN CABLE ASSY	NP	
	29747-0026	CONNECTOR - TRANSCEIVER END 300 NAV/COM TYPES RT-540A AND RT-517R	AR	
	32604-0000	PLUG - REMOTE INDICATOR END 300 NAV/COM TYPE IN-514R INDICATOR	AR	
	MS3057-10A	CLAMP-REMOTE INDICATOR END 300 NAV/COM TYPE IN-514R INDICATOR	AR	
	18397-0000	CONNECTOR REPLACES 32604-0000 WHEN TYPE IN-525 GLIDE SLOPE INDICATOR IS INSTALLED	1	
	S1838-2	HOUSING 36 PIN - P1	1	
- 41	31640-0000	INDICATOR - VOR/LOC - TYPE IN-514R USED ON 300 NAV/COM TYPES RT-540A AND RT-517R ARC	AR	
- 42	32350-0000	INDICATOR - VOR/LOC/ILS - TYPE IN-525A ARC USED ON 300 NAV/COM	AR	
		ATTACHING PARTS		
	AN515B6R10	SCREW	3	
	NAS487-20	NUT	3	
		---*---		

CONTINUED ON NEXT PAGE

FIGURE AND INDEX NO.	PART NUMBER	DESCRIPTION 1 2 3 4 5 6 7	UNITS PER ASSY	USABLE ON CODE
1-4-		DUAL RADIO INSTALLATION - THE FOLLOWING PARTS ARE ---------- REQUIRED IN ADDITION TO THOSE REQUIRED FOR A SINGLE RADIO INSTALLATION. ITEM 43 REPLACES ITEM 35 WHEN DUAL RADIOS ARE INSTALLED		
- 43	SEE FIG 4-1	TRANSMITTER SELECTOR SWITCH & AUDIO AMPLIFIER INSTL ---------	1	
		CABLE ASSY-OMNI TEE ADAPTER TO BALUN STUB ----------	NP	
		REPLACES ITEM 35 WHEN DUAL RADIOS ARE INSTALLED --------- ALL RADIOS EXCEPT 337 SERIES		
- 44	RG-58A/U	COAXIAL CABLE - BULK ITEM ----------	AR	
	UG-88C/U	PLUG-COAXIAL - CONNECTS TO BALUN CONNECTOR ---------- 177, 180, 182, 185, 206 SERIES, 207 SERIES AND 210 SERIES ONLY	AR	
	UG-291/U	PLUG-COAXIAL - CONNECTS TO BALUN CONNECTOR 172 ONLY ---	1	
- 45	UG-89/U	JACK-COAXIAL - CONNECTS TO TEE ADAPTER ----------	1	
- 46		CABLE ASSY-OMNI TEE ADAPTER TO OMNI CABLE CONNECTION -------- AT WING ROOT REPLACES ITEM 35 WHEN DUAL RADIOS ARE INSTALLED 337 SERIES ONLY	NP	
	RG-58A/U	COAXIAL CABLE - BULK ITEM ----------	AR	
	UG-88C/U	PLUG-COAXIAL - CONNECTS TO WING ROOT CONNECTION ----------	1	
- 47	UG-89/U	JACK-COAXIAL - CONNECTS TO TEE ADAPTER ----------	1	
		CABLE ASSY - TRANSCEIVER TO OMNI TEE ADAPTER ----------	NP	
- 48	RG-58A/U	COAXIAL CABLE - TWO LEADS 17 INCHES LONG-BULK ITEM --------	AR	
- 49	UG-88C/U	PLUG-COAXIAL - TEE ADAPTER END ----------	2	
	UG-1050/U	CONNECTOR-COAXIAL - TRANSCEIVER END ----------	1	
- 50	UG-274/U	TEE ADAPTER - OMNI ----------	1	
	S1832-2	HOUSING 36 PIN - P4 USED ON MAIN CABLE ASSY --------- ON SECOND INSTL	1	

CESSNA 300 MARKER BEACON RECEIVER INSTALLATION

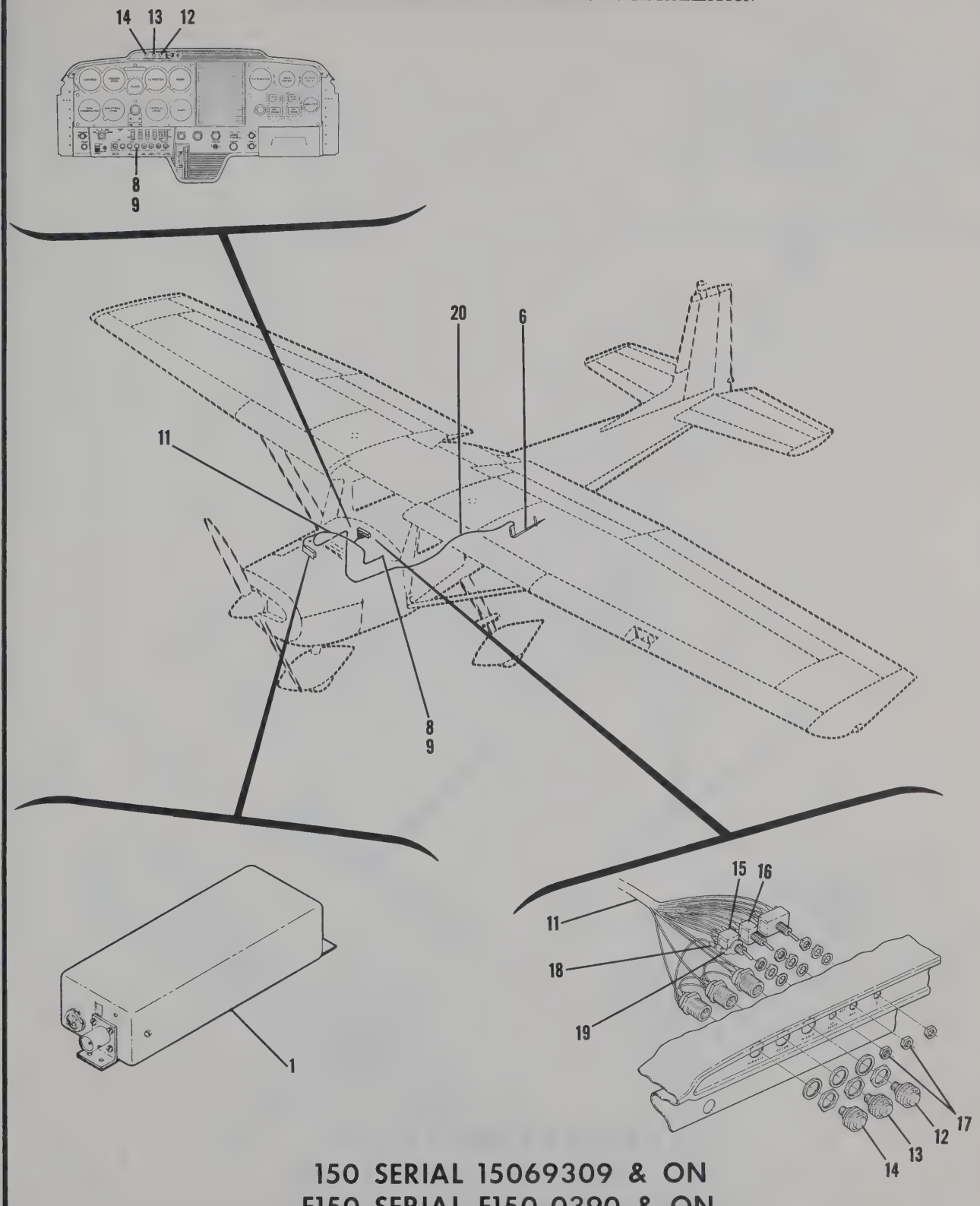

150 SERIAL 15069309 & ON
F150 SERIAL F150-0390 & ON

Figure 1-5. Cessna 300 Marker Beacon (Type R-502B) Receiver Installation (Sheet 1 of 9)

CESSNA 300 MARKER BEACON RECEIVER INSTALLATION

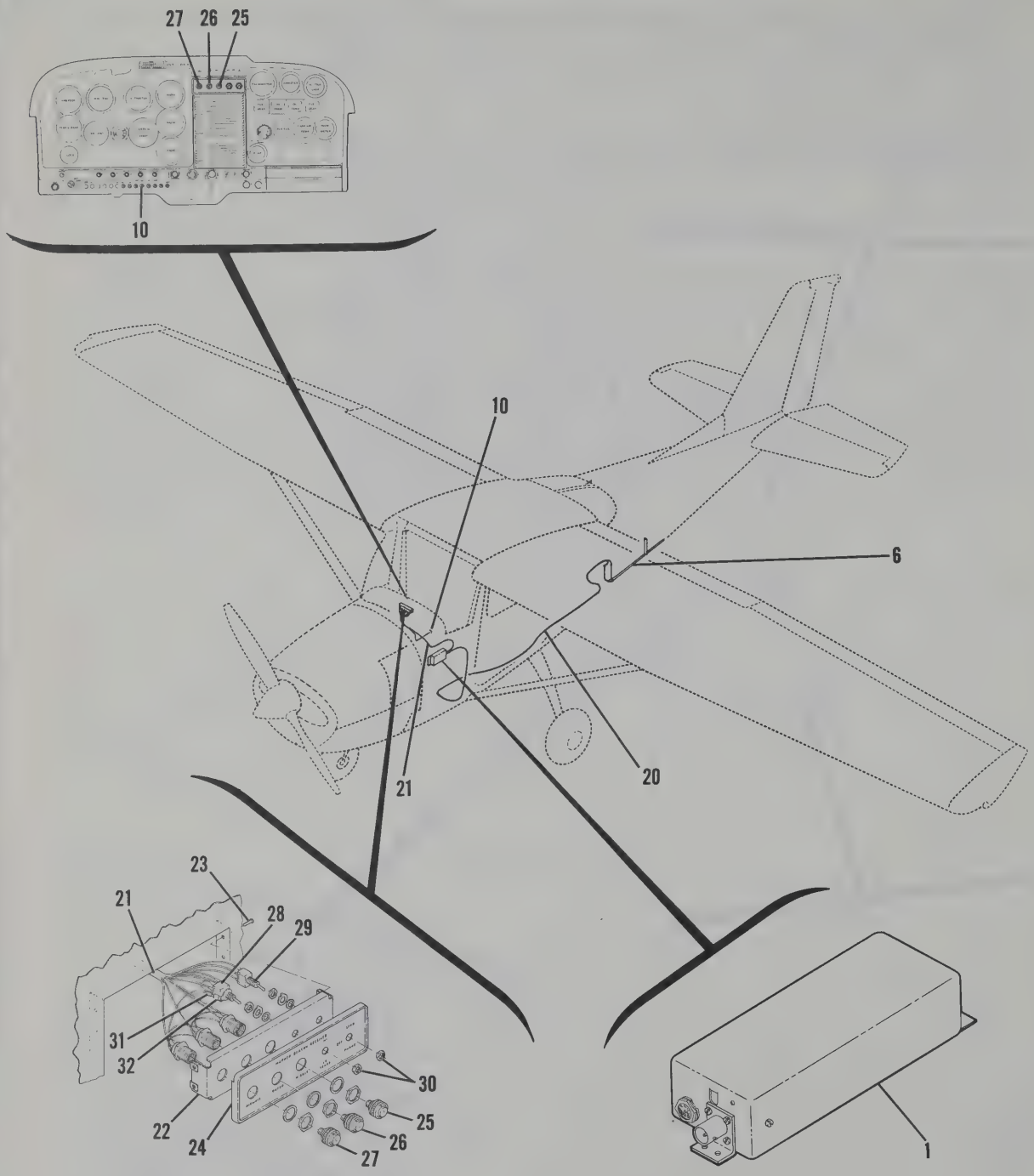

172 SERIAL 17257162 & ON
F172 SERIAL F172-0560 & ON
FR172 SERIAL FR172-0061 & ON

Figure 1-5. Cessna 300 Marker Beacon (Type R-502B) Receiver Installation (Sheet 2 of 9)

CESSNA 300 MARKER BEACON RECEIVER INSTALLATION

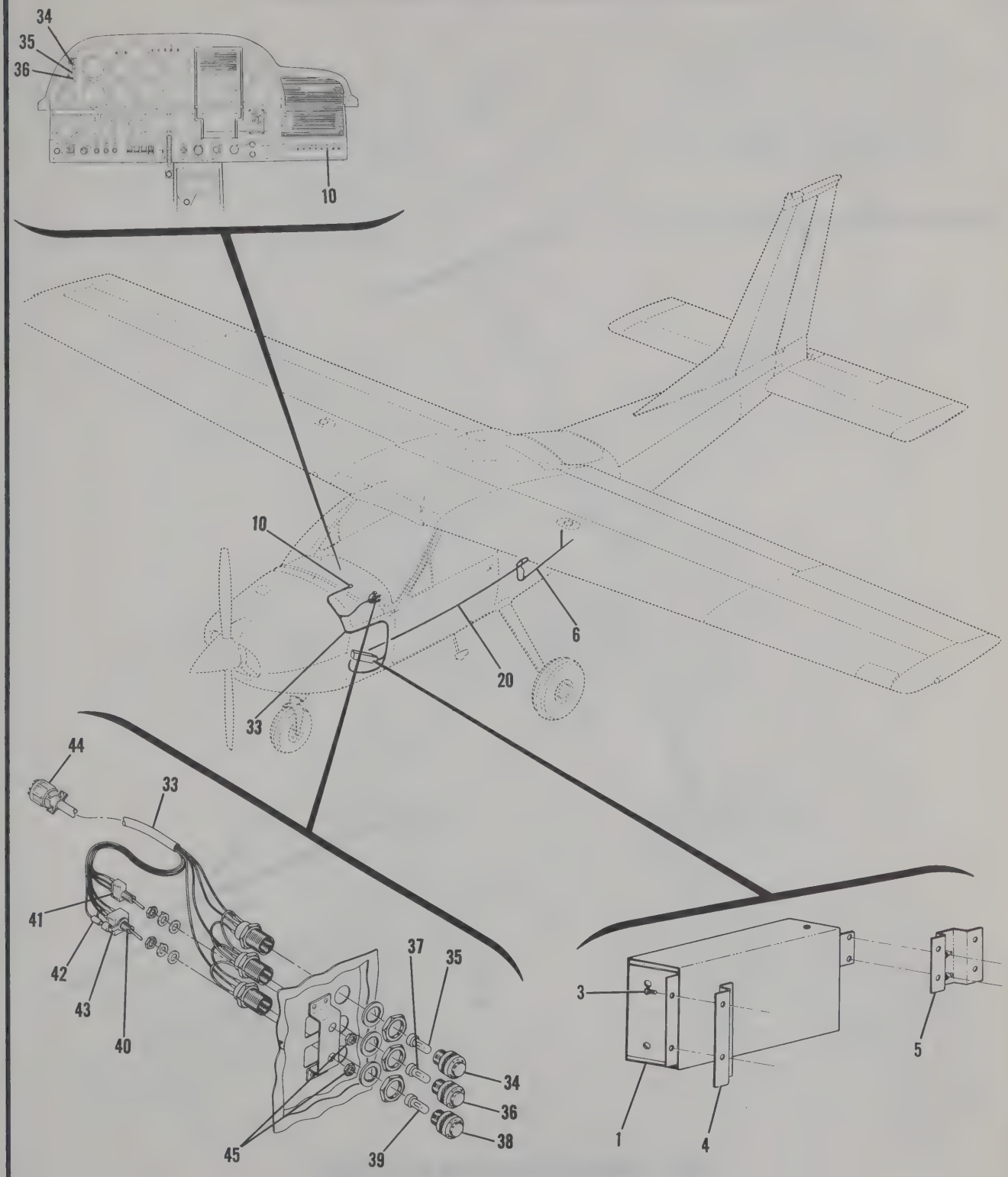

177 SERIAL 17701165 & ON

Figure 1-5. Cessna 300 Marker Beacon (Type R-502B) Receiver Installation (Sheet 3 of 9)

CESSNA MARKER BEACON 300 RECEIVER INSTALLATION

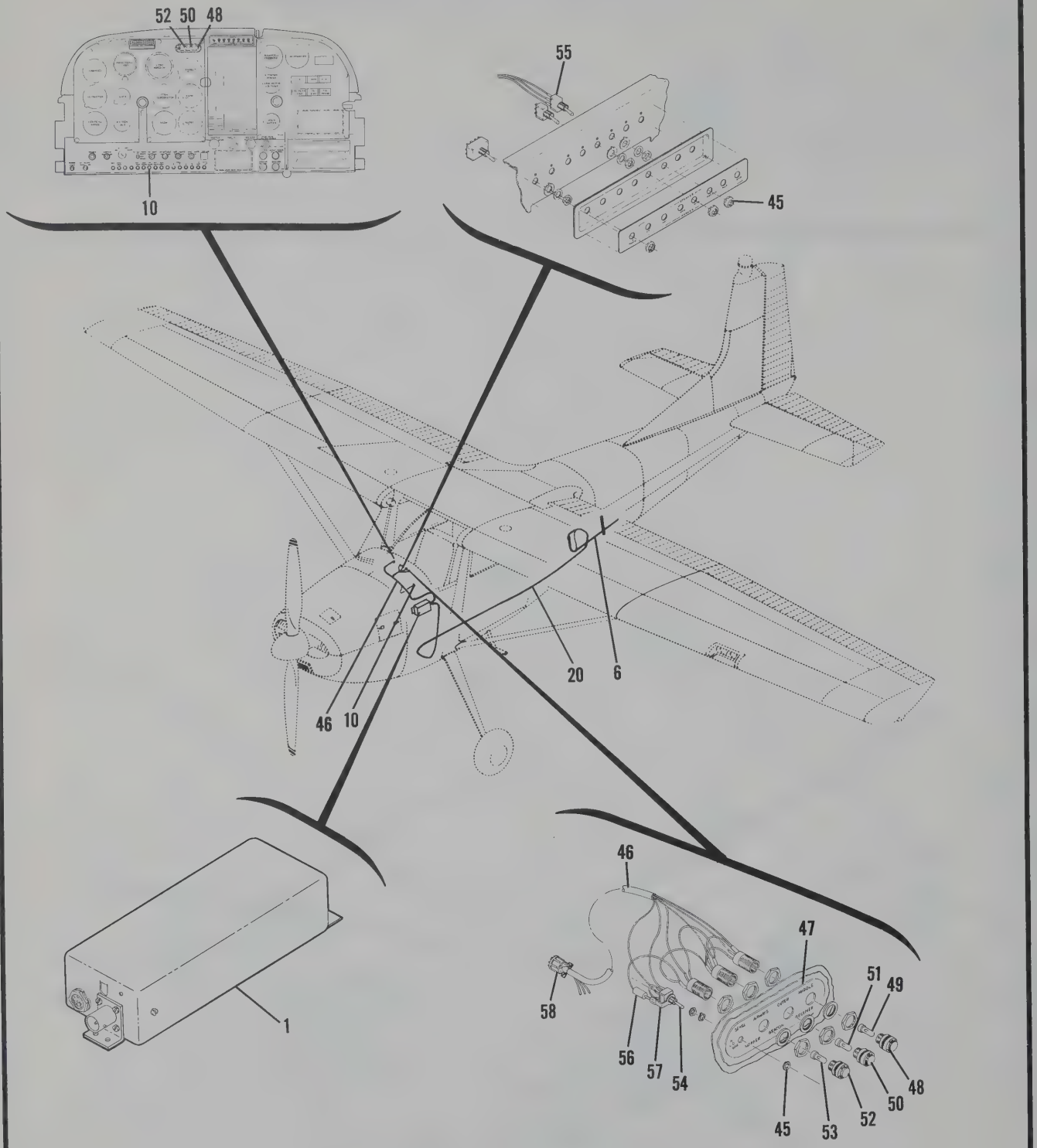

180 SERIAL 18051994 & ON
185 SERIAL 185-1448 & ON

Figure 1-5. Cessna 300 Marker Beacon (Type R-502B) Receiver Installation (Sheet 4 of 9)

CESSNA MARKER BEACON 300 RECEIVER INSTALLATION

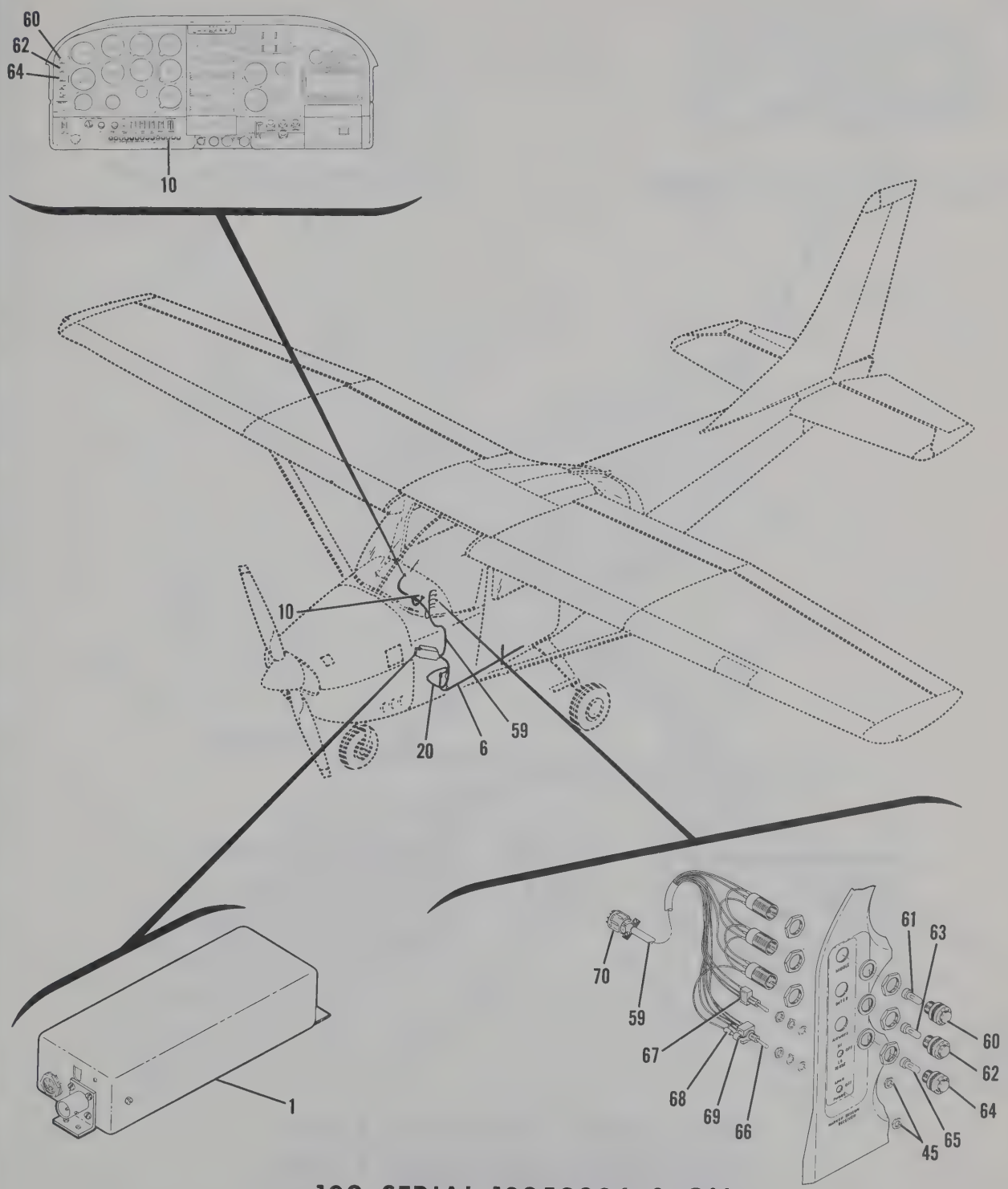

182 SERIAL 18259306 & ON
A182 SERIAL A182-0117 & ON

Figure 1-5. Cessna 300 Marker Beacon (Type R-502B) Receiver Installation (Sheet 5 of 9)

CESSNA MARKER BEACON 300 RECEIVER INSTALLATION

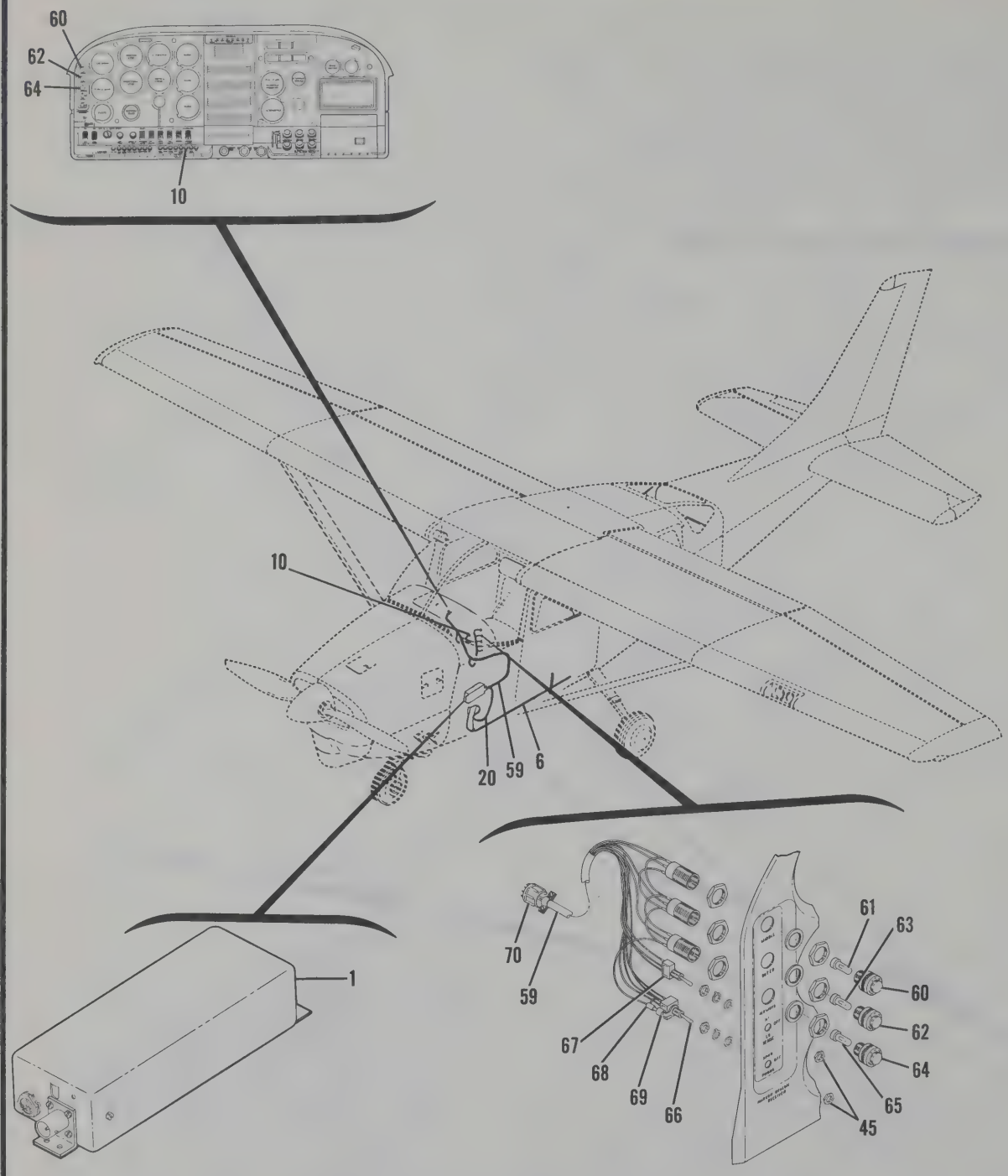

P206 SERIAL P206-0520 & ON
U206 SERIAL U206-1235 & ON
TP206 SERIAL TP206-0520 & ON
TU206 SERIAL TU206-1235 & ON

Figure 1-5. Cessna 300 Marker Beacon (Type R-502B) Receiver Installation (Sheet 6 of 9)

CESSNA MARKER BEACON 300 RECEIVER INSTALLATION

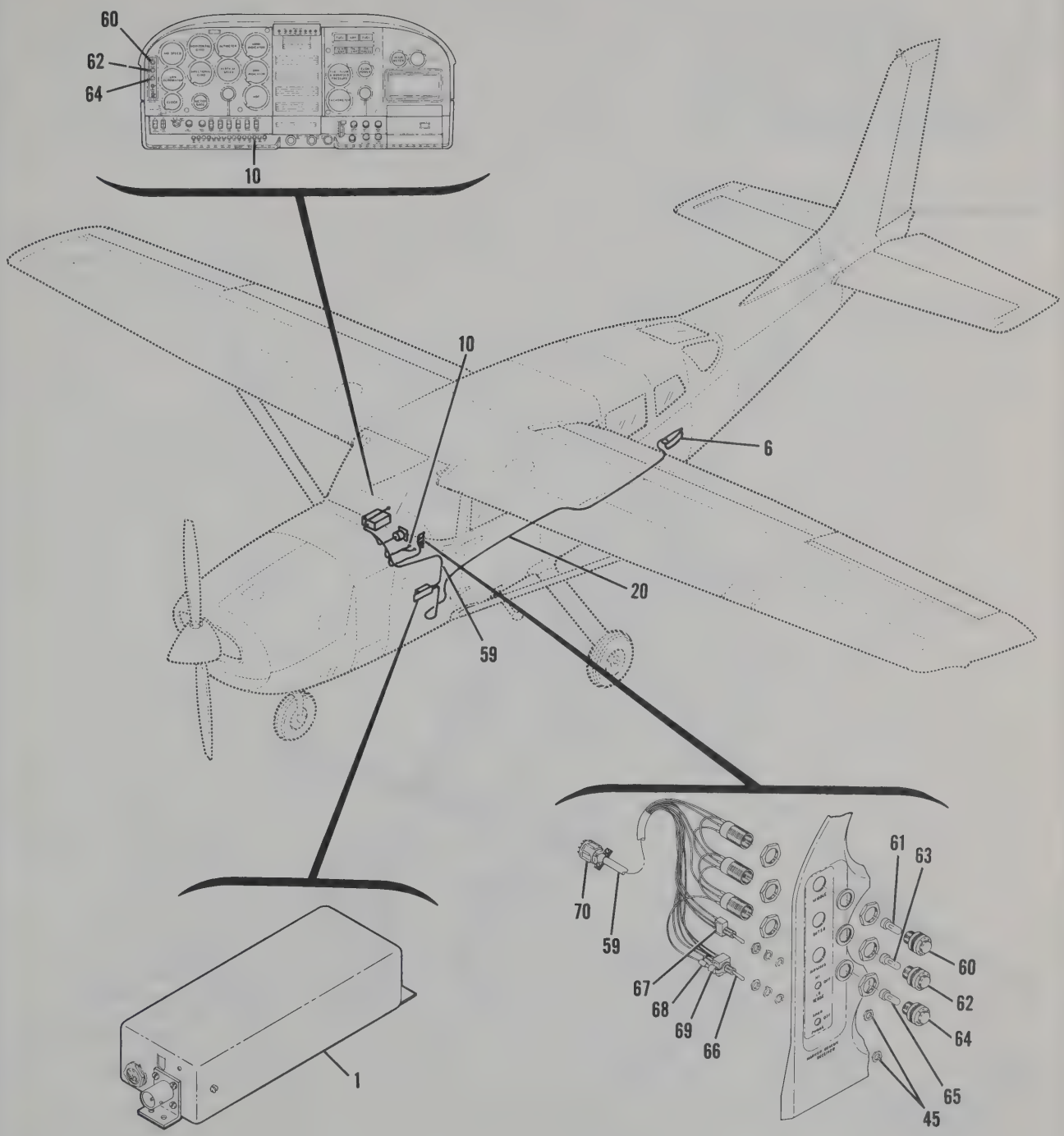

207 SERIAL 20700001 & ON
T207 SERIAL 20700001 & ON

Figure 1-5. Cessna 300 Marker Beacon (Type R-502B) Radio Installation (Sheet 7 of 9)

CESSNA MARKER BEACON 300 RECEIVER INSTALLATION

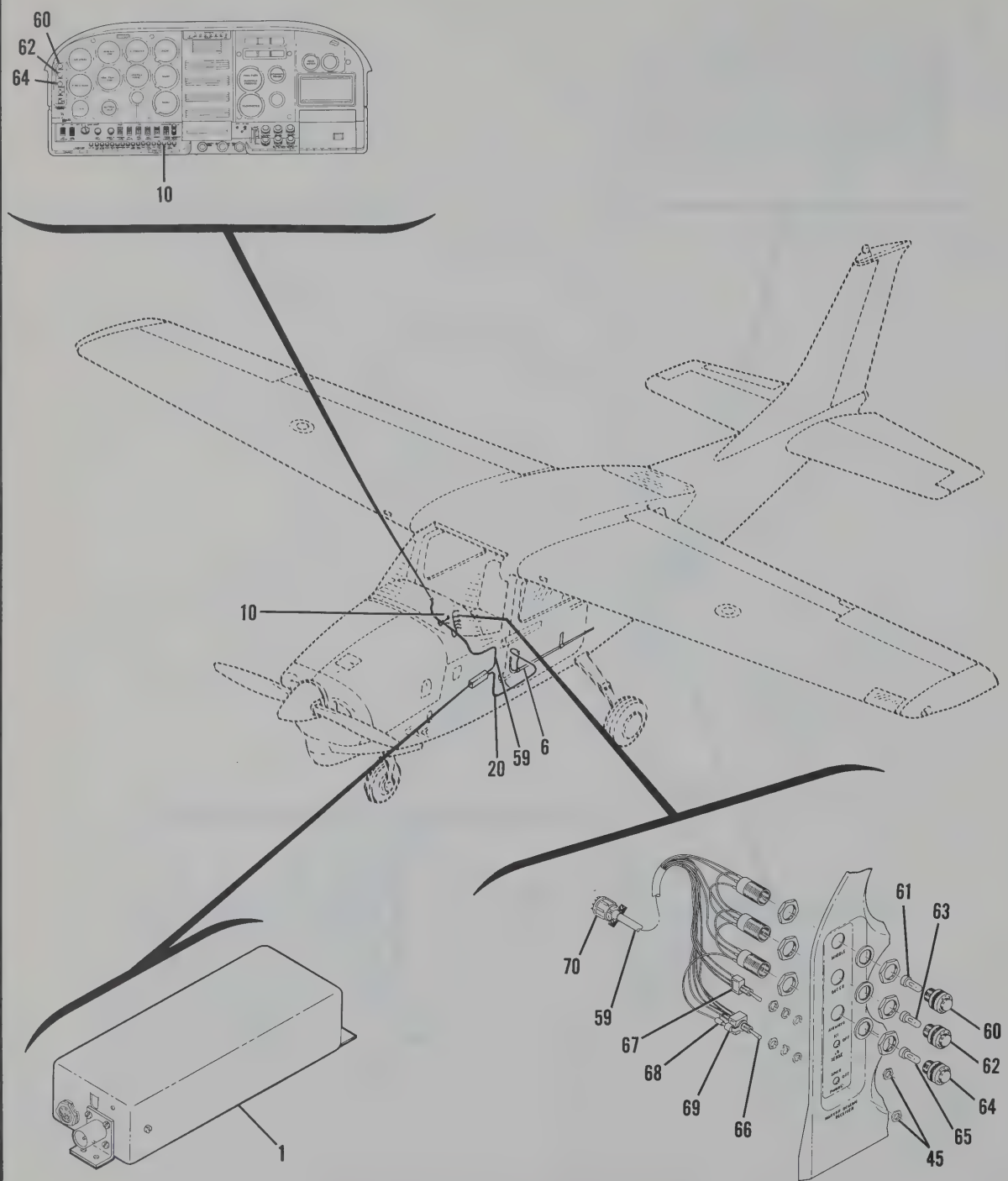

210 SERIAL 21059062 & ON
T210 SERIAL T210-0393 & ON

Figure 1-5. Cessna 300 Marker Beacon (Type R-502B) Receiver Installation (Sheet 8 of 9)

CESSNA MARKER BEACON 300 RECEIVER INSTALLATION

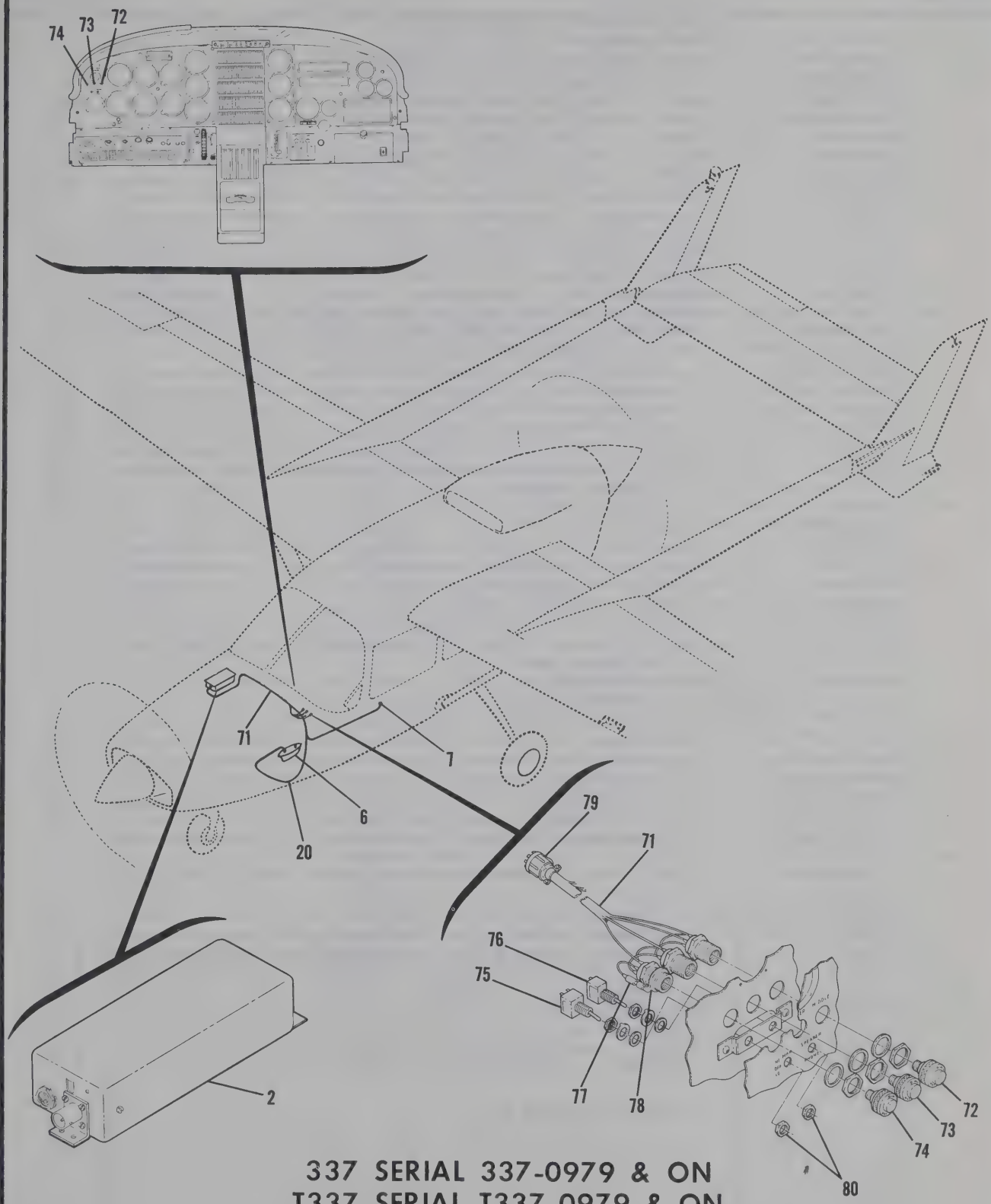

337 SERIAL 337-0979 & ON
T337 SERIAL T337-0979 & ON

Figure 1-5. Cessna 300 Marker Beacon (Type R-502B) Receiver Installation (Sheet 9 of 9)

FIGURE AND INDEX NO.	PART NUMBER	DESCRIPTION 1 2 3 4 5 6 7	UNITS PER ASSY	USABLE ON CODE
1-5-		CESSNA 300 MARKER BEACON INSTALLATION ALL MODELS EXCEPT MODEL 188	NP	
- 1	31240-0014	MARKER BEACON RECEIVER-TYPE R-502B-14 VOLT SYSTEM ARC	1	
- 2	31240-0028	MARKER BEACON RECEIVER-TYPE R-502B-28 VOLT SYSTEM ARC	1	
		ATTACHING PARTS		
- 3	AN515-6R8	SCREW 150, 172, 177, 180 & 185 ONLY	4	
	AN507-632R8	SCREW 182, 206 SERIES, 207 SERIES & 210 SERIES ONLY	4	
	AN515-6R6	SCREW 337 & T337 ONLY	4	
	AN960-6L	WASHER 172, 180 & 185 ONLY	4	
	AN960-10L	WASHER 182, 206 SERIES, 207 SERIES & 210 SERIES ONLY	4	
	NAS679A06	NUT ALL MODELS EXCEPT 177	4	
- 4	1713126-1	SUPPORT ASSY 177 ONLY	1	
- 5	1713126-3	SUPPORT ASSY 177 ONLY ---*---	1	
- 6	SEE FIG 3-4	MARKER BEACON ANTENNA INSTALLATION	1	
- 7	S1360-2	CIRCUIT BREAKER 337 & T337 ONLY	1	
- 8	S1090-5	FUSE 150 ONLY	1	
- 9	S1090-11	FUSEHOLDER ASSY 150 ONLY	1	
- 10	S1360-10	CIRCUIT BREAKER-NAV LTS ALL MODELS EXCEPT 150, 337 & T337	REF	
- 11	0470400-238	CABLE ASSY MKR BCN RCVR TO MKR BCN LTS 150 ONLY	1	
- 12	MS25041-4-328	LAMP ASSY-MIDDLE-AMBER LENS	1	
	MS25237-328	LAMP-MIDDLE	1	
- 13	MS25041-10-328	LAMP ASSY-OUTER-BLUE LENS	1	
	MS25237-328	LAMP-OUTER	1	
- 14	MS25041-1-328	LAMP ASSY-AIRWAYS-WHITE LENS	1	
	MS25237-328	LAMP-AIRWAY	1	
- 15	S1696-2	SWITCH	1	
- 16	S1695-1	SWITCH	1	
- 17	S1216-3	NUT REPLACES NUT SUPPLIED WITH S1696-2 & S1695-1 SWITCHES	2	
- 18	400HM3W	RESISTOR OHM	1	
	28371-0009	PLUG ARC	1	
- 19	S1367-1-12	TERMINAL	1	
	S1694-3-0.5	SHRINK TUBING	9	
- 20		CABLE ASSY RECEIVER TO ANTENNA	1	
	RG-58A/U	COAXIAL CABLE-BULK ITEM	AR	
	UG-88C/U	PLUG TWO REQD ON 337 & T337	1	
	S1367-2-8	TERMINAL ALL MODELS EXCEPT 337 & T337	1	
	S1367-1-10	TERMINAL ALL MODELS EXCEPT 337 & T337	1	
- 21	0570400-299	CABLE ASSY-MARKER BEACON RECEIVER TO MKR BCN LIGHTS 172 SERIES ONLY	1	
- 22	0470412-3	MOUNTING PLATE ASSY	1	
		ATTACHING PARTS		
- 23	S1021Z6-6	SCREW ---*---	4	
- 24	0470413-3	FACE PLATE	1	
- 25	MS25041-4-328	LAMP ASSY-MIDDLE-AMBER LENS	1	
	MS25237-328	LAMP-MIDDLE	1	
- 26	MS25041-10-328	LAMP ASSY-OUTER-BLUE LENS	1	
	MS25237-328	LAMP-OUTER	1	
- 27	MS25041-1-328	LAMP ASSY-AIRWAYS-WHITE LENS	1	
	MS25237-328	LAMP-AIRWAYS	1	
- 28	S1696-2	SWITCH	1	
	0570400-2003	CABLE ASSY CONNECTS SELECTOR SWITCH INSTL TO AUDIO JCT BOX	1	
- 29	S1695-1	SWITCH	1	
	S1694-3-0.5	TUBING	3	
	S1837-1	TERMINAL	3	
	S1838-1	HOUSING CONNECTS TO P-2 ON AUDIO JUNCTION BOX	1	
- 30	S1216-3	NUT REPLACES NUT SUPPLIED WITH S1696-2 & S1695-1 SWITCHES	2	
- 31	400HM3W	RESISTOR OHM	1	
- 32	S1367-1-12	TERMINAL	1	
	S1694-3-0.5	TUBING	18	
	28371-0009	PLUG ARC	1	
	S1838-3	HOUSING CONNECTS TO P-3 ON AUDIO JUNCTION BOX	1	

CONTINUED ON NEXT PAGE

FIGURE AND INDEX NO.	PART NUMBER	DESCRIPTION 1 2 3 4 5 6 7	UNITS PER ASSY	USABLE ON CODE
1-5- 33	177C000-223	CABLE ASSY 177 ONLY RECEIVER TO MKR BCN LIGHTS ------	1	
- 34	MS25041-4-328	LAMP ASSY-MIDDLE-AMBER LENS ----------	1	
- 35	MS25237-328	LAMP-MIDDLE ----------	1	
- 36	MS25041-10-328	LAMP ASSY-OUTER-BLUE LENS ----------	1	
- 37	MS25237-328	LAMP-OUTER ----------	1	
- 38	MS25041-1-328	LAMP ASSY-AIRWAYS-WHITE LENS ----------	1	
- 39	MS25237-328	LAMP-AIRWAYS ----------	1	
- 40	S1696-2	SWITCH ----------	1	
	177C000-243	CABLE ASSY CONNECTS SELECTOR SWITCH INSTL TO AUDIO ---- JCT BOX	1	
- 41	S1695-1	SWITCH ----------	1	
	S1694-3-0.5	TUBING ----------	3	
	S1837-1	TERMINAL ----------	3	
	S1838-1	HOUSING CONNECTS TO P-2 ON AUDIO JUNCTION BOX -------		
- 42	40OHM3W	RESISTOR OM ----------	1	
- 43	S1367-1-12	TERMINAL ----------	1	
	S1694-3-0.5	TUBING ----------	18	
- 44	28371-0009	PLUG ARC ----------	1	
	S-1838-3	HOUSING CONNECTS TO P-3 ON AUDIO JUNCTION BOX ---------	REF	
- 45	S1216-3	NUT REPLACES NUT SUPPLIED WITH S1696-2 & S1695-1 SWITCHES MODELS 177, 180, 185, 182, 206 SERIES, 207 SERIES & 210 SERIES ONLY	2	
- 46	0770400-285	CABLE ASSY 180 & 185 ONLY RECEIVER TO MRK BCN LIGHTS	1	
- 47	077C093-1	PLACARD ASSY ----------	1	
- 48	MS25041-4-328	LAMP ASSY-MIDDLE-AMBER LENS ----------	1	
- 49	MS25237-328	LAMP-MIDDLE ----------	1	
- 50	MS25041-10-328	LAMP ASSY-OUTER-BLUE LENS ----------	1	
- 51	MS25237-328	LAMP-OUTER ----------	1	
- 52	MS25041-1-328	LAMP ASSY-AIRWAYS-WHITE LENS ----------	1	
- 53	MS25237-328	LAMP-AIRWAYS ----------	1	
- 54	S1696-2	SWITCH ----------	1	
	077C400-279	CABLE ASSY CONNECTS SELECTOR SWITCH INSTL TO AUDIO ---- JCT BOX	1	
- 55	S1695-1	SWITCH ----------	1	
	S1694-3-0.5	TUBING ----------	3	
	S1837-1	TERMINAL ----------	3	
	S1838-1	HOUSING CONNECTS TO P-2 ON AUDIO JUNCTION BOX -------	1	
- 56	40OHM3W	RESISTOR OM ----------	1	
- 57	S1367-1-12	TERMINAL ----------	1	
	S1694-3-0.5	TUBING ----------	18	
- 58	28371-0009	PLUG ARC ----------	1	
	S1838-3	HOUSING CONNECTS TO P-3 ON AUDIO JUNCTION BOX ---------	1	
- 59	1270475-204	CABLE ASSY-MARKER BEACON 182, 206 SERIES, 207 SERIES & -- 210 SERIES ONLY RECEIVER TO MARKER BEACON LIGHTS	1	
- 60	MS25041-4-328	LAMP ASSY-MIDDLE-AMBER LENS ----------	1	
- 61	MS25237-328	LAMP-MIDDLE ----------	1	
- 62	MS25041-10-328	LAMP ASSY-OUTER-BLUE LENS ----------	1	
- 63	MS25237-328	LAMP-OUTER ----------	1	
- 64	MS25041-1-328	LAMP ASSY-AIRWAYS-WHITE LENS ----------	1	
- 65	MS25237-328	LAMP-AIRWAYS ----------	1	
- 66	S-1696-2	SWITCH ----------	1	
	1270475-296	CABLE ASSY CONNECTS SELECTOR SWITCH INSTL TO AUDIO ---- JCT BOX	1	
- 67	S1695-1	SWITCH ----------	1	
	S1694-3-0.5	TUBING ----------	3	
	S1837-1	TERMINAL ----------	3	
	S1838-1	HOUSING CONNECTS TO P-2 ON AUDIO JUNCTION BOX -------	1	
- 68	40OHM3W	RESISTOR OM ----------	1	
- 69	S1367-1-12	TERMINAL ----------	1	
	S1694-3-0.5	TUBING ----------	18	
- 70	28371-0009	PLUG ARC ----------	1	
	S1838-3	HOUSING CONNECTS TO P-3 ON AUDIO JUNCTION BOX ---------	1	

CONTINUED ON NEXT PAGE

FIGURE AND INDEX NO.	PART NUMBER	DESCRIPTION 1 2 3 4 5 6 7	UNITS PER ASSY	USABLE ON CODE
1-5- 71	1570001-223	CABLE ASSY 337 SERIES ONLY RECEIVER TO MARKER BEACON LIGHTS	1	
- 72	MS25041-4-328	LAMP ASSY-MIDDLE-AMBER LENS	1	
	MS25237-328	LAMP-MIDDLE	1	
- 73	MS25041-10-328	LAMP ASSY-OUTER-BLUE LENS	1	
	MS25237-328	LAMP-OUTER	1	
- 74	MS25041-1-328	LAMP ASSY-AIRWAYS-WHITE LENS	1	
	MS25237-328	LAMP-AIRWAYS	1	
- 75	S-1696-2	SWITCH	1	
	157C001-2017	CABLE ASSY-MARKER BEACON CONNECTS SELECTOR SW & AUDIO - JCT BOX	1	
- 76	S1695-1	SWITCH	1	
	S-1694-3-0.5	TUBING	3	
	S1837-1	TERMINAL	3	
	S1838-1	HOUSING CONNECTS TO P-2 ON AUDIO JUNCTION BOX	1	
- 77	820HM2W	RESISTOR OH	1	
- 78	28487	TERMINAL	1	
	S1694-3-0.5	TUBING	18	
- 79	28371-0009	PLUG ARC	1	
	S1838-3	HOUSING CONNECTS TO P-3 ON AUDIO JUNCTION BOX	1	
- 80	S1216-3	NUT REPLACES NUT SUPPLIED WITH S1696-2 & S1695-1 SWITCHES	2	

CESSNA 300 DME RADIO INSTALLATION

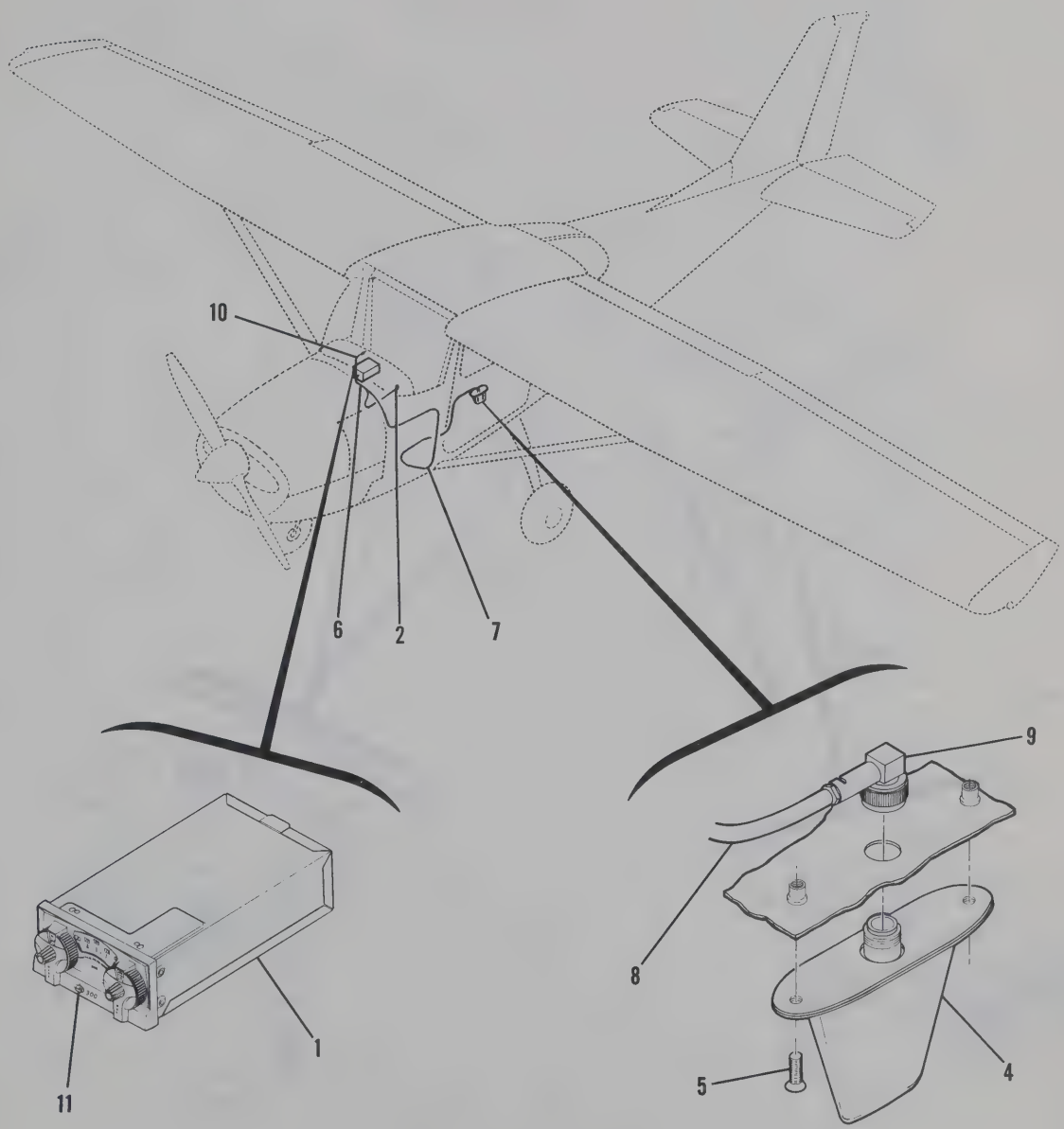

172 SERIAL 17257162 & ON
F172 SERIAL F172-0560 & ON
FR172 SERIAL FR172-0061 & ON

Figure 1-6. Cessna 300 DME (Type KN-60) Radio Installation (Sheet 1 of 8)

CESSNA 300 DME RADIO INSTALLATION

177 SERIAL 17701165 & ON

Figure 1-6. Cessna 300 DME (Type KN-60) Radio Installation (Sheet 2 of 8)

CESSNA 300 DME RADIO INSTALLATION

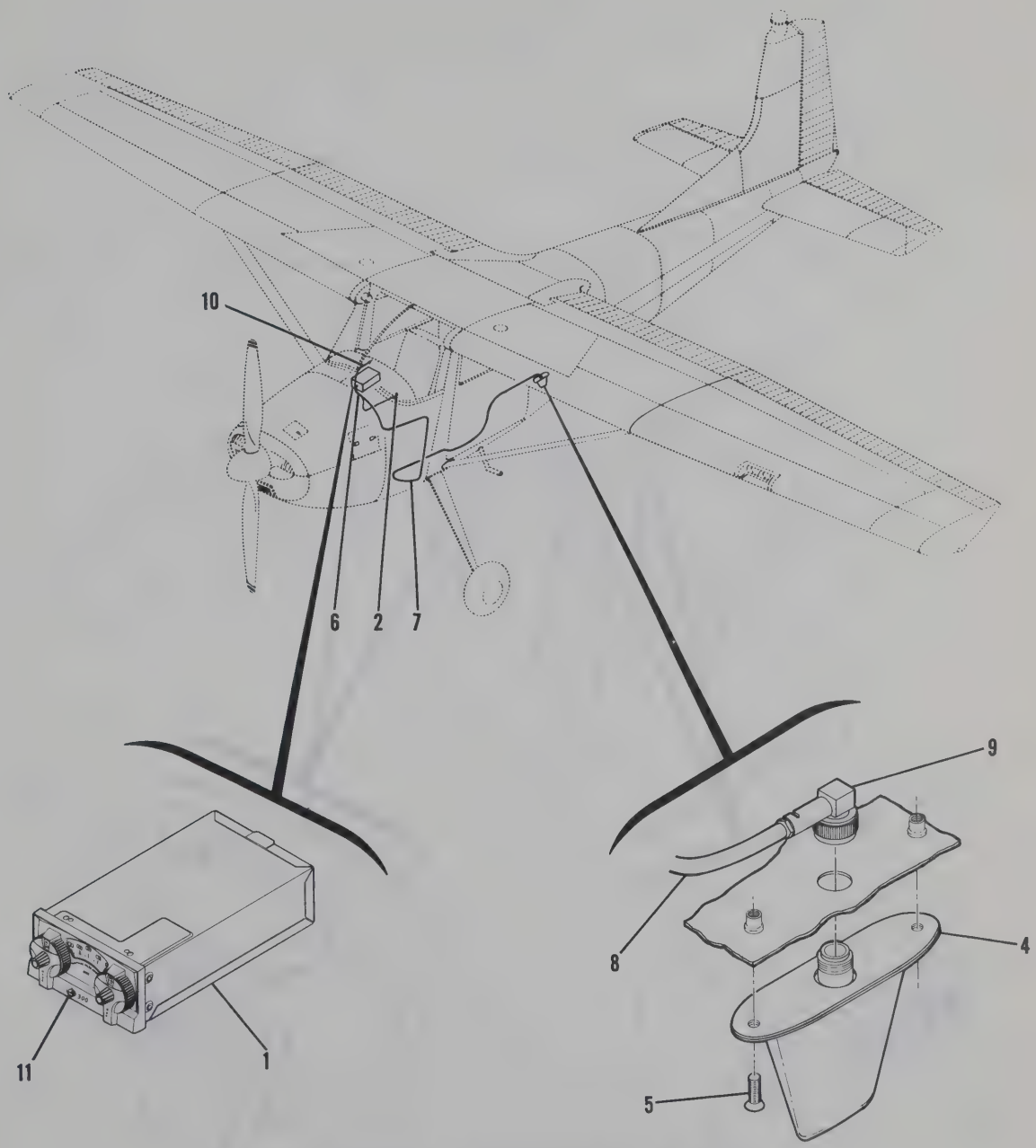

180 SERIAL 18051994 & ON
185 SERIAL 185-1448 & ON

Figure 1-6. Cessna 300 DME (Type KN-60) Radio Installation (Sheet 3 of 8)

CESSNA 300 DME RADIO INSTALLATION

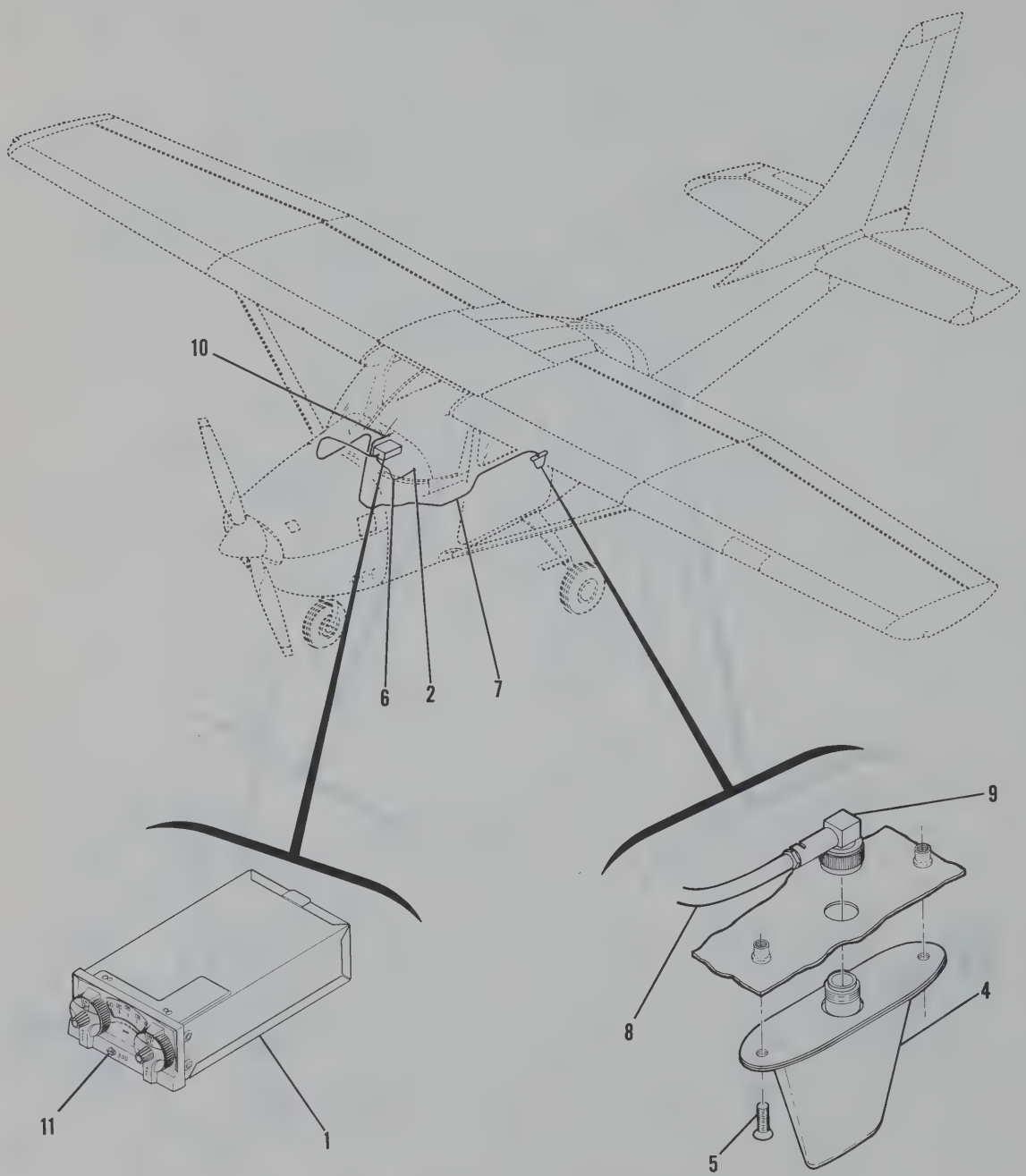

182 SERIAL 18259306 & ON
A182 SERIAL A182-0117 & ON

Figure 1-6. Cessna 300 DME (Type KN-60) Radio Installation (Sheet 4 of 8)

CESSNA 300 DME RADIO INSTALLATION

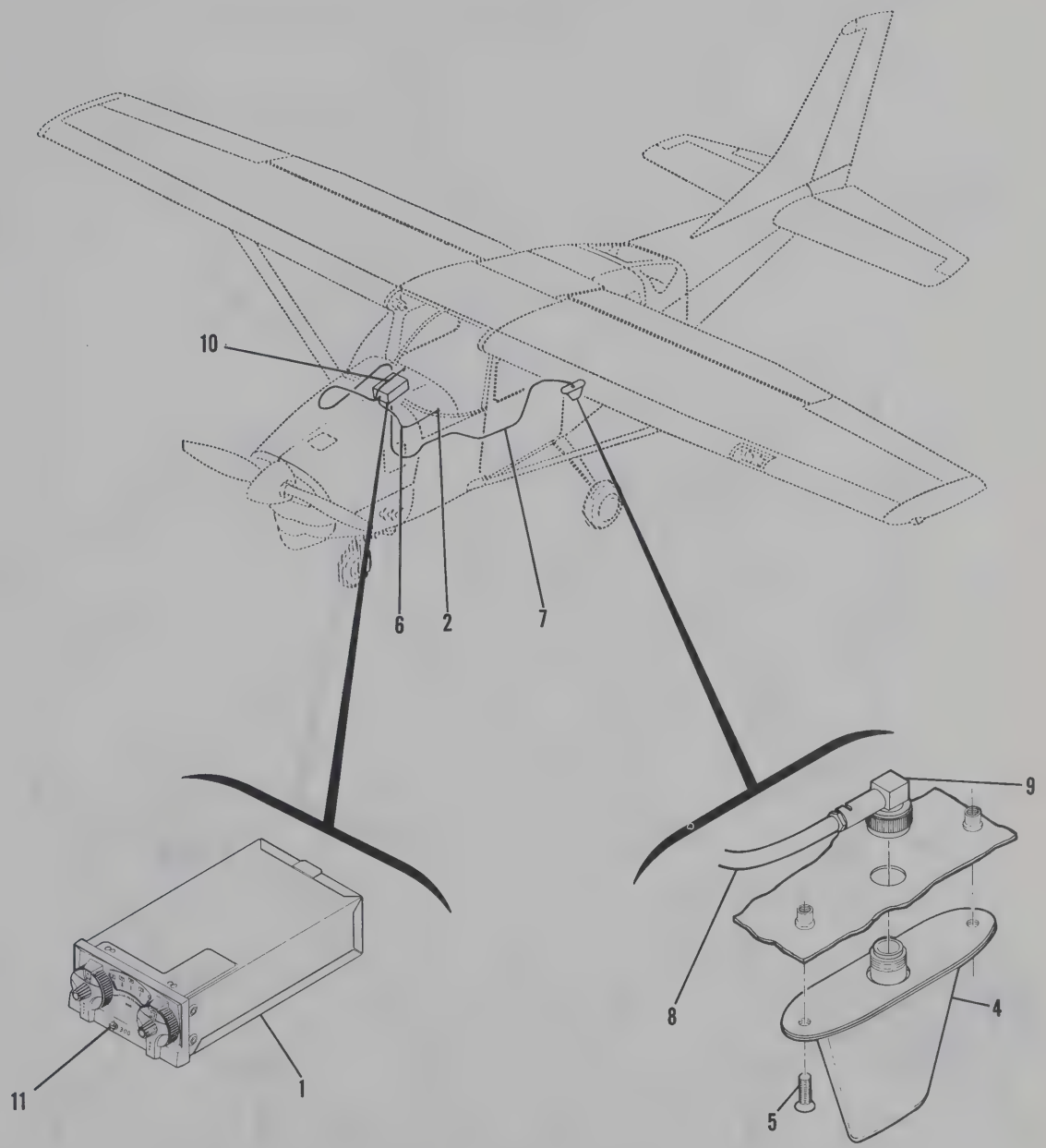

P206 SERIAL P206-0520 & ON
U206 SERIAL U206-1235 & ON
TP206 SERIAL TP206-0520 & ON
TU206 SERIAL TU206-1235 & ON

Figure 1-6. Cessna 300 DME (Type KN-60) Radio Installation (Sheet 5 of 8)

CESSNA 300 DME RADIO INSTALLATION

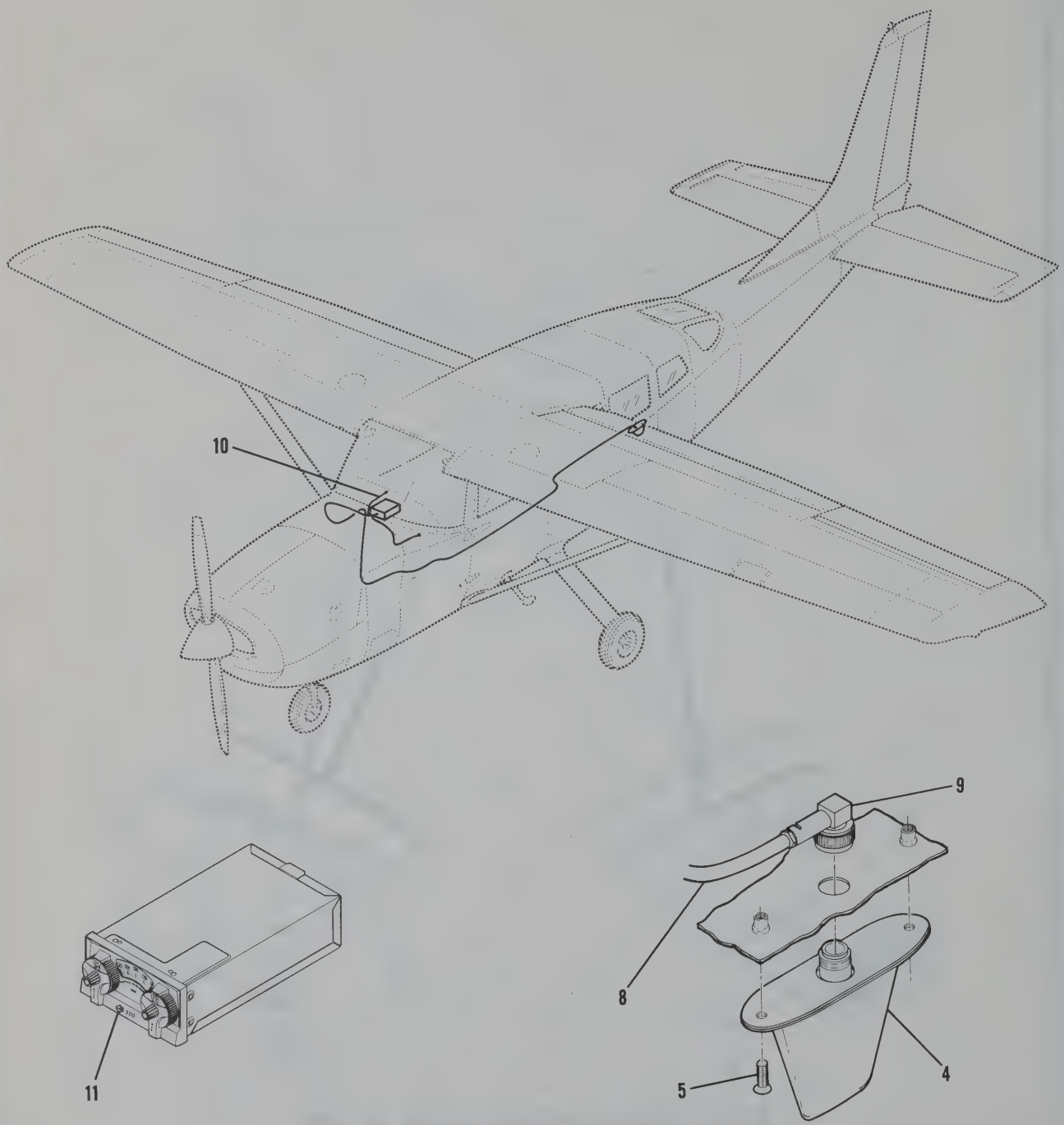

207 SERIAL 20700001 & ON
T207 SERIAL 20700001 & ON

Figure 1-6. Cessna 300 DME (Type KN-60) Radio Installation (Sheet 6 of 8)

CESSNA 300 DME RADIO INSTALLATION

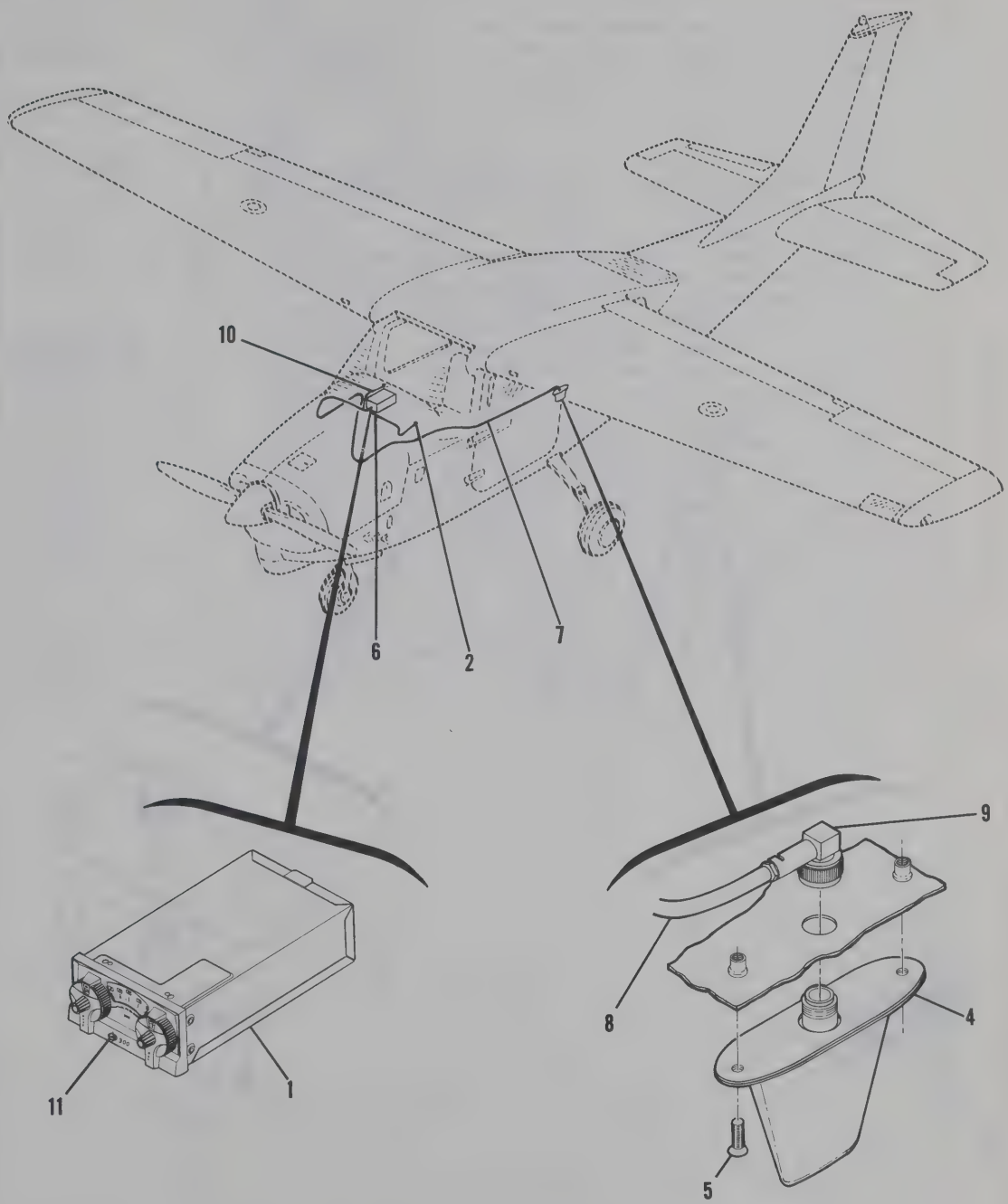

210 SERIAL 21059062 & ON
T210 SERIAL T210-0393 & ON

Figure 1-6. Cessna 300 DME (Type KN-60) Radio Installation (Sheet 7 of 8)

CESSNA 300 DME RADIO INSTALLATION

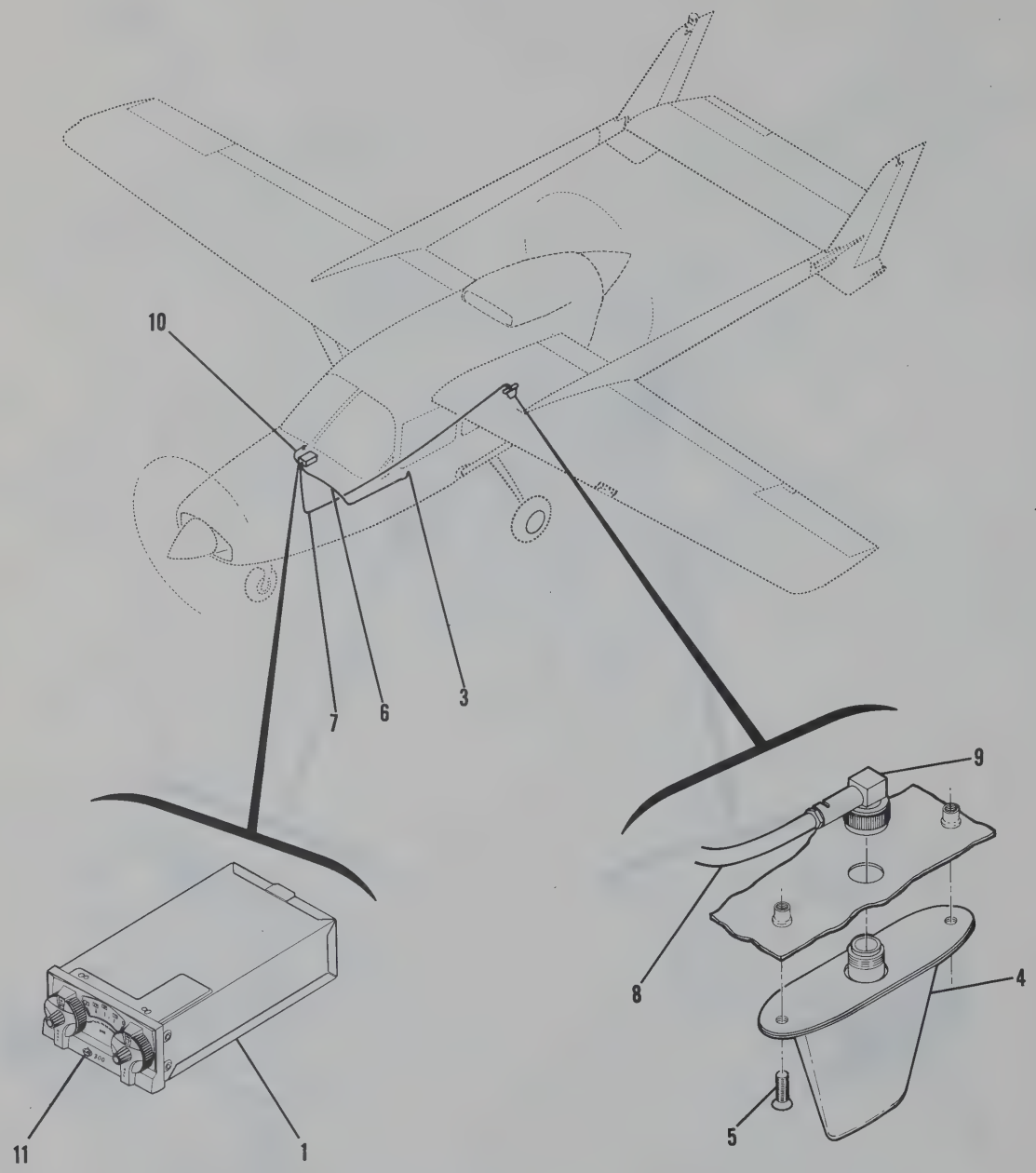

337 SERIAL 337-0979 & ON
T337 SERIAL T337-0979 & ON

Figure 1-6. Cessna 300 DME (Type KN-60) Radio Installation (Sheet 8 of 8)

FIGURE AND INDEX NO.	PART NUMBER	DESCRIPTION 1 2 3 4 5 6 7	UNITS PER ASSY	USABLE ON CODE
1-6-		CESSNA DME 300-TYPE KN-6C ALL MODELS EXCEPT 150 & 188 -----	NP	
- 1	C582602-0201	DME RECEIVER-TYPE KN-6CB KG ----------	1	
		ATTACHING PARTS		
	S1021Z8-6	SCREW ----------	4	
	NAS446-4-3	NUT ----------	4	
		---*---		
- 2	S1360-10	CIRCUIT BREAKER ALL MODELS EXCEPT 337 ----------	1	
- 3	S1360-5	CIRCUIT BREAKER 337 ONLY ----------	1	
- 4	KA-32	DME ANTENNA KG ----------	1	
		ATTACHING PARTS		
	S1648A08K75	RIVNUT ----------	2	
- 5	AN5C7-832R10	SCREW ----------	2	
		---*---		
	SEE FIG 5-1	RADIO COOLING INSTALLATION ----------	1	
	SEE FIG 4-1	SELECTOR SWITCH & ISOLATION AMPLIFIER INSTALLATION ----------	1	
- 6		CABLE ASSY-DME RECEIVER PIGTAIL TO AUDIO JUNCTION BOX -------	NP	
	030-2043-00	PLUG-8 PIN KG ----------	1	
	S1838-3	HOUSING ATTACHES TO P3 ON AUDIO JUNCTION BOX ----------	1	
- 7		CABLE ASSY-DME RECEIVER PIGTAIL TO DME ANTENNA ----------	NP	
- 8	C24-0001-00	RF CABLE KG WHEN EXHAUSTED USE AMPHENOL 21-004 ----	1	
		WITH FIRST ALTERNATE REGO RG-8/U FOAM CABLE AND		
		SECOND ALTERNATE COLUMBIA WIRE PRODUCTS CO., NO. 1198		
- 9	030-0024-00	CONNECTOR ATTACHES TO ANTENNA KG ----------	1	
	030-0020-01	CONNECTOR ATTACHES TO RECEIVER PIGTAIL KG ----------	1	
- 10	0570400-2005	CABLE ASSY-AUDIO JUNCTION BOX TO DME SPEAKER/PHONE SWITCH ---	NP	
	S1695-2	SWITCH ----------	1	
	S1837-1	TERMINALS ----------	3	
	S1694-3-0.5	SHRINK TUBING BULK ITEM ----------	AR	
	S1838-1	HOUSING ATTACHES TO P2 ON AUDIO JUNCTION BOX ----------	1	
	S1216-3	NUT-DECORATIVE ----------	1	
	0413126-5	RHEOSTAT 172, 180 & 185 ONLY ----------	1	
	S1390-5	KNOB-RHEOSTAT 172, 180 & 185 ONLY ----------	1	
	0413126-5	RHEOSTAT 177 ONLY ----------	1	
	S1753-6	KNOB-RHEOSTAT 177 ONLY ----------	1	
	S1780-4	INSERT-KNOB 177 ONLY ----------	1	
	S1880-3	RHEOSTAT 182, 206 SERIES, 207 SERIES & 210 SERIES ONLY --	1	
	S1753-7	KNOB-RHEOSTAT 182, 206 SERIES, 207 SERIES ----------	1	
		& 210 SERIES ONLY		
	1570164-1	SWITCH ASSY-RADIO LIGHT DIMMING 337 SERIES ONLY ----------	1	
	9341GL	RHEOSTAT CPH 337 SERIES ONLY ----------	1	
	S1753-6	KNOB-RHEOSTAT 337 SERIES ONLY ----------	1	
- 11	S1467-1	BUTTON ----------	1	

CESSNA 300 HF TRANSCEIVER RADIO INSTALLATION

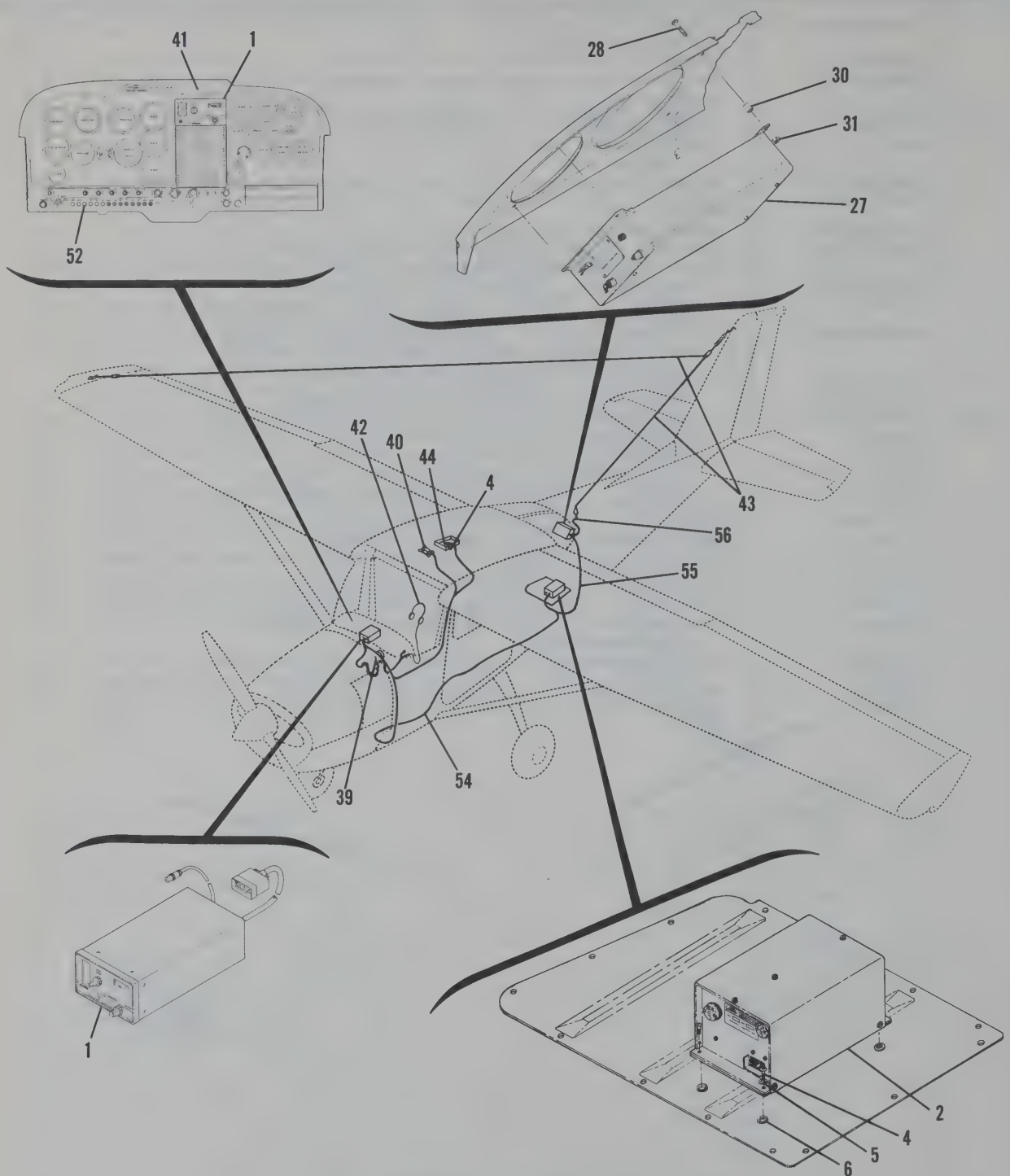

172 SERIAL 17257162 & ON
F172 SERIAL F172-0560 & ON
FR172 SERIAL FR172-0061 & ON

Figure 1-7. Cessna 300 HF Transceiver (Type PT-10A) Radio Installation (Sheet 1 of 8)

CESSNA 300 HF TRANSCEIVER RADIO INSTALLATION

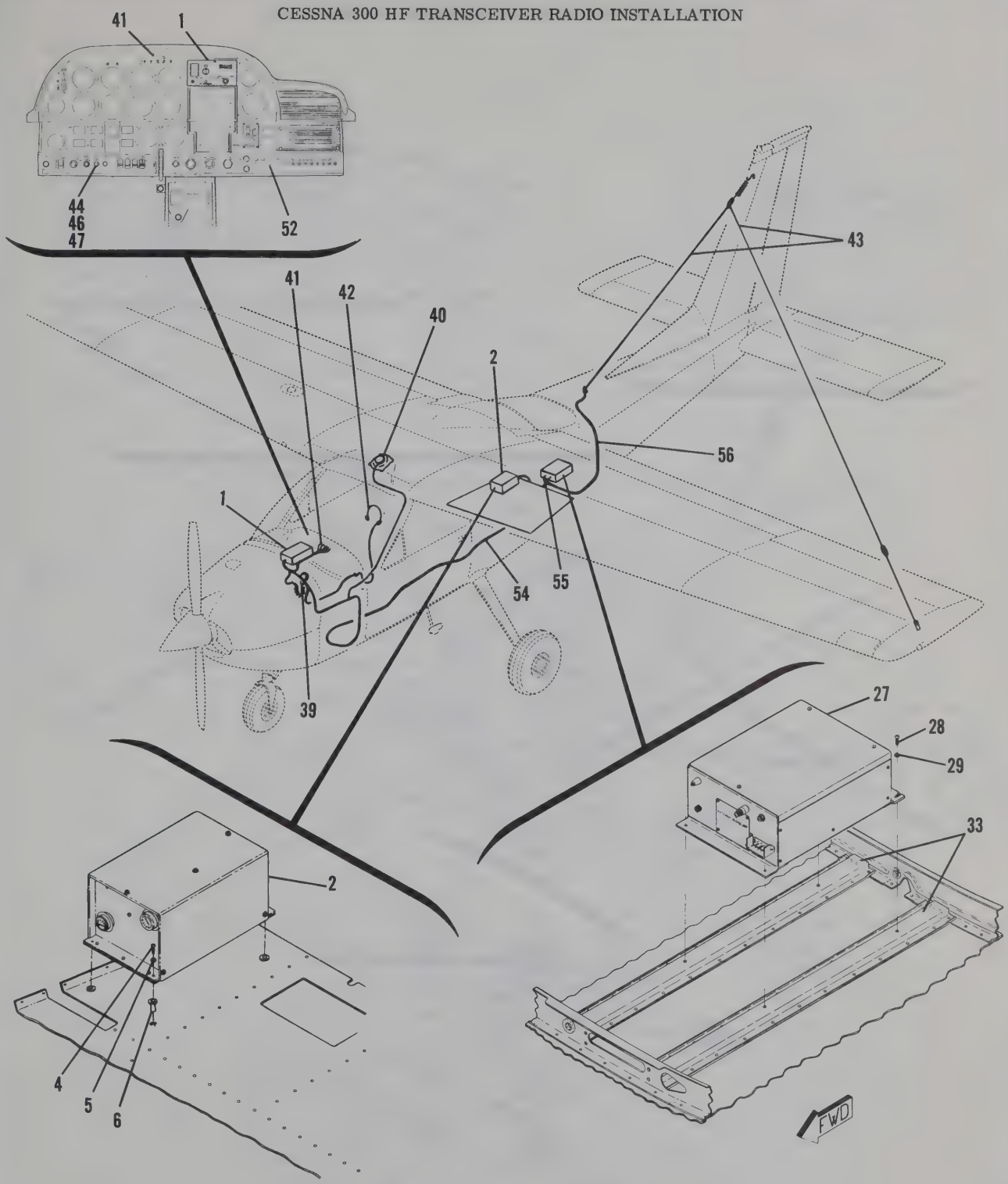

177 SERIAL 17701165 & ON

Figure 1-7. Cessna 300 HF Transceiver (Type PT-10A) Radio Installation (Sheet 2 of 8)

CESSNA 300 HF TRANSCEIVER RADIO INSTALLATION

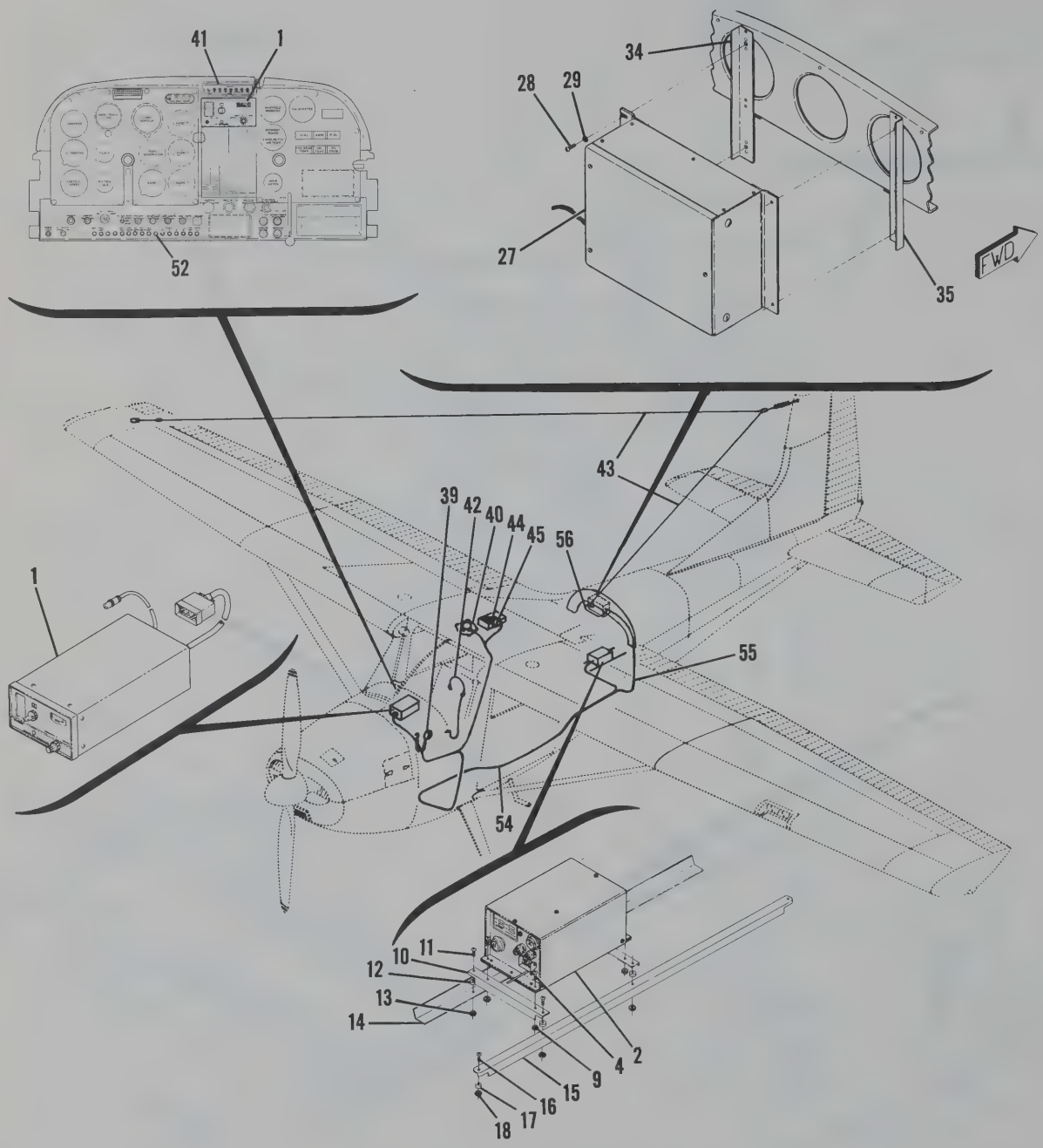

180 SERIAL 18051994 & ON
185 SERIAL 185-1448 & ON

Figure 1-7. Cessna 300 HF Transceiver (Type PT-10A) Radio Installation (Sheet 3 of 8)

CESSNA 300 HF TRANSCEIVER RADIO INSTALLATION

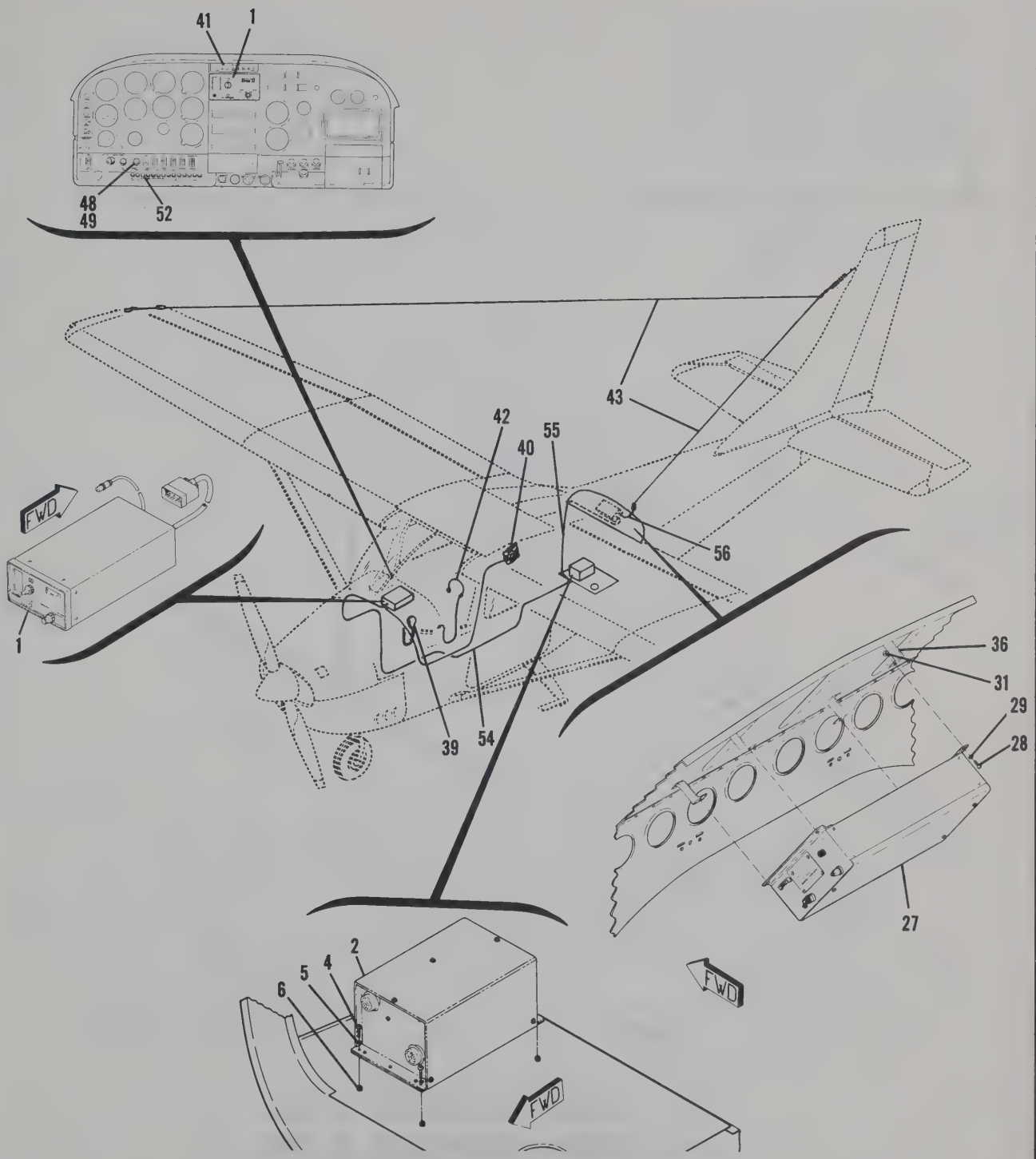

182 SERIAL 18259306 & ON
A182 SERIAL A182-0117 & ON

Figure 1-7. Cessna 300 HF Transceiver (Type PT-10A) Radio Installation (Sheet 4 of 8)

CESSNA 300 HF TRANSCEIVER RADIO INSTALLATION

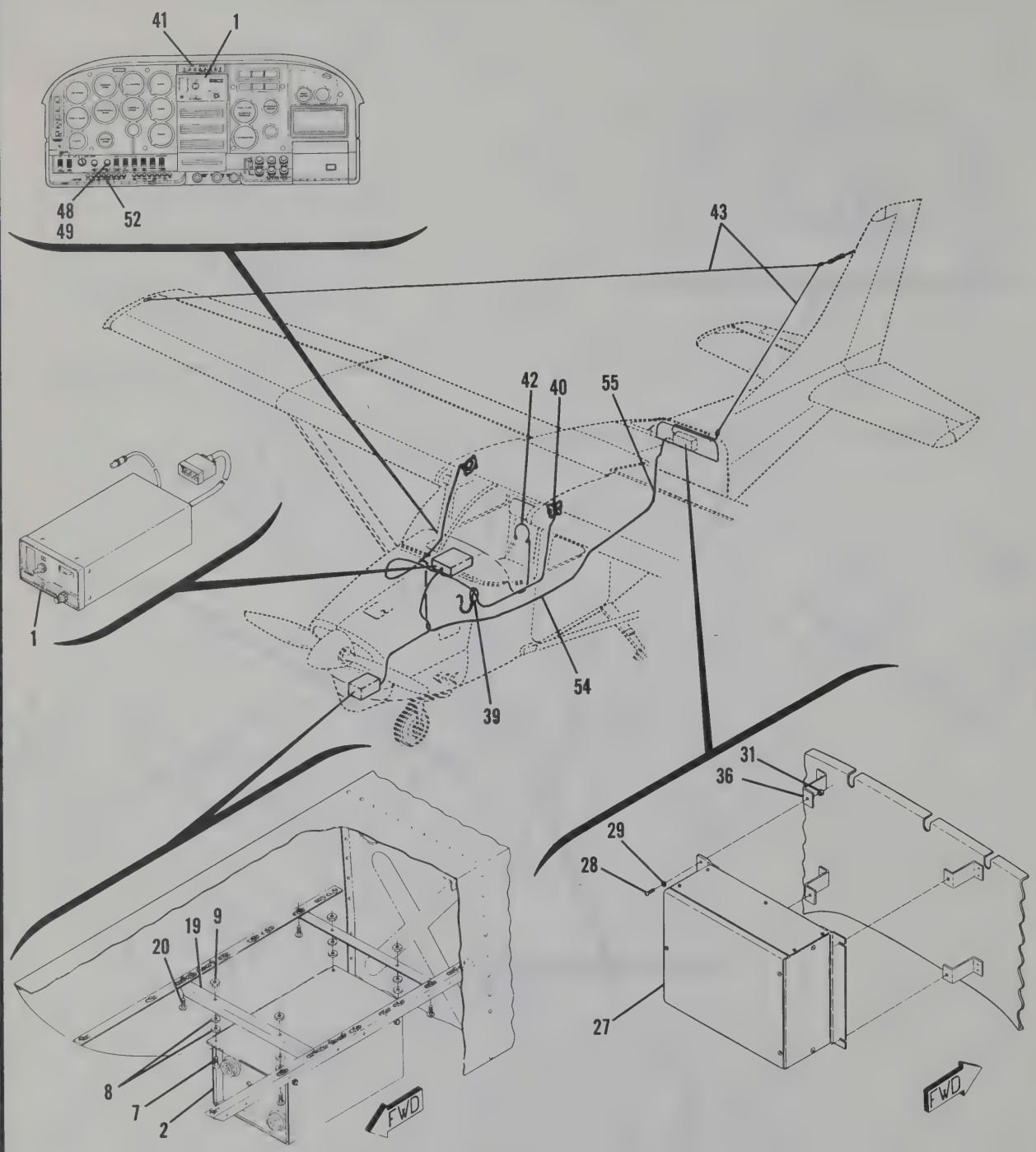

P206 SERIAL P206-0520 & ON
U206 SERIAL U206-1235 & ON
TP206 SERIAL TP206-0520 & ON
TU206 SERIAL TU206-1235 & ON

Figure 1-7. Cessna 300 HF Transceiver (Type PT-10A) Radio Installation (Sheet 5 of 8)

CESSNA 300 HF TRANSCEIVER RADIO INSTALLATION

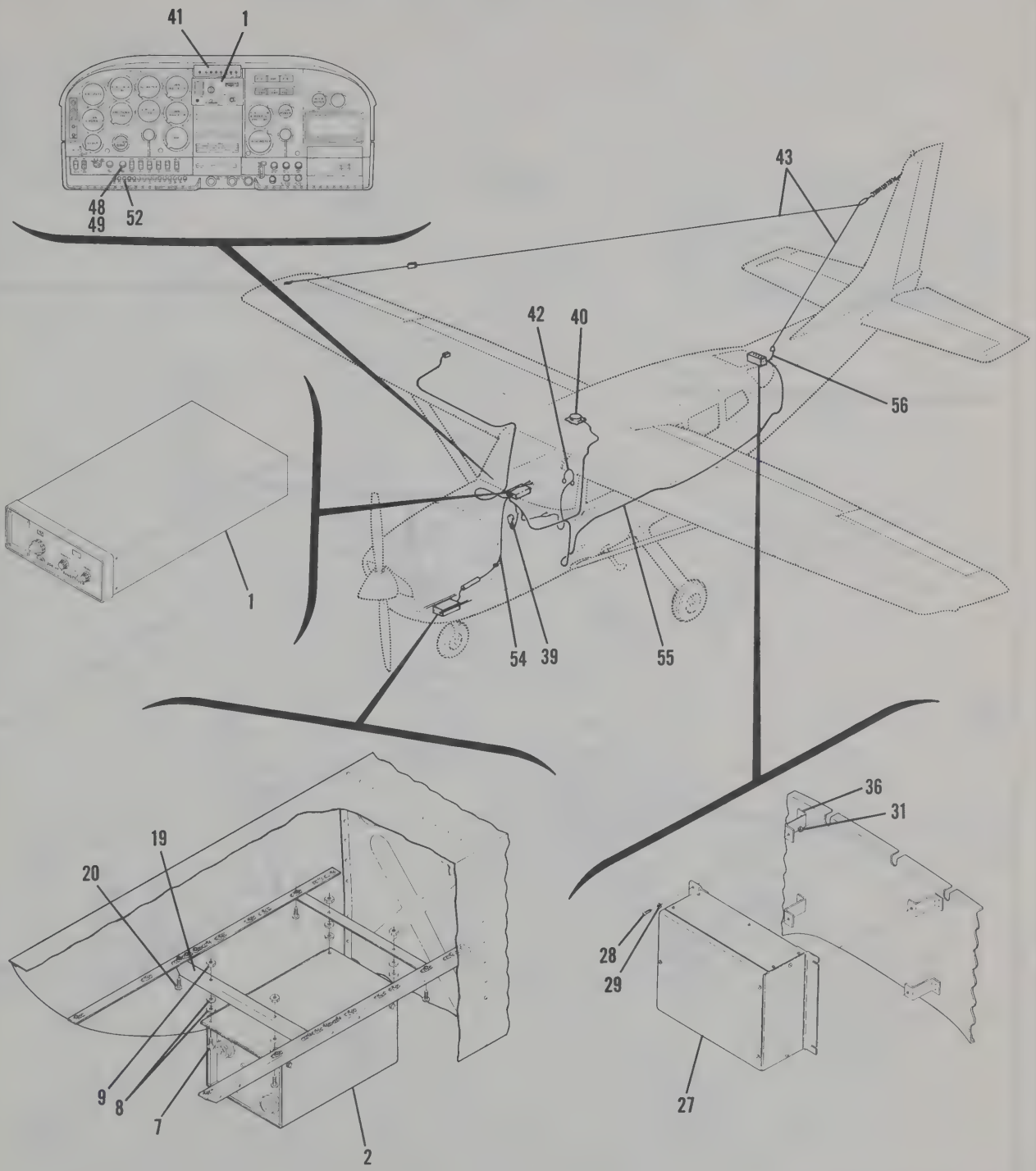

207 SERIAL 20700001 & ON
T207 SERIAL 20700001 & ON

Figure 1-7. Cessna 300 HF Transceiver (Type PT-10A) Radio Installation (Sheet 6 of 8)

CESSNA 300 HF TRANSCEIVER RADIO INSTALLATION

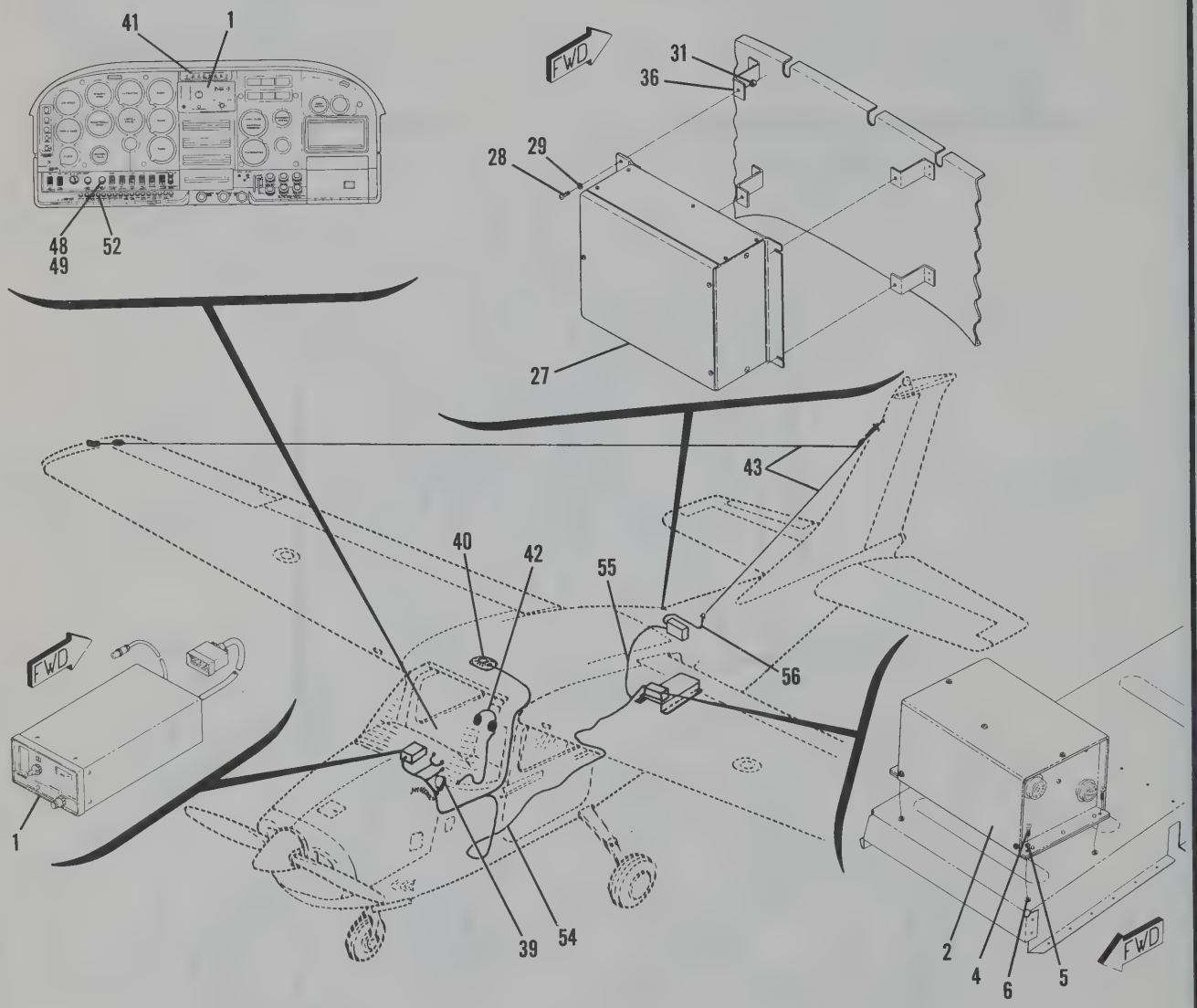

210 SERIAL 21059062 & ON
T210 SERIAL T210-0393 & ON

Figure 1-7. Cessna 300 HF Transceiver (Type PT-10A) Radio Installation (Sheet 7 of 8)

CESSNA 300 HF TRANSCEIVER RADIO INSTALLATION

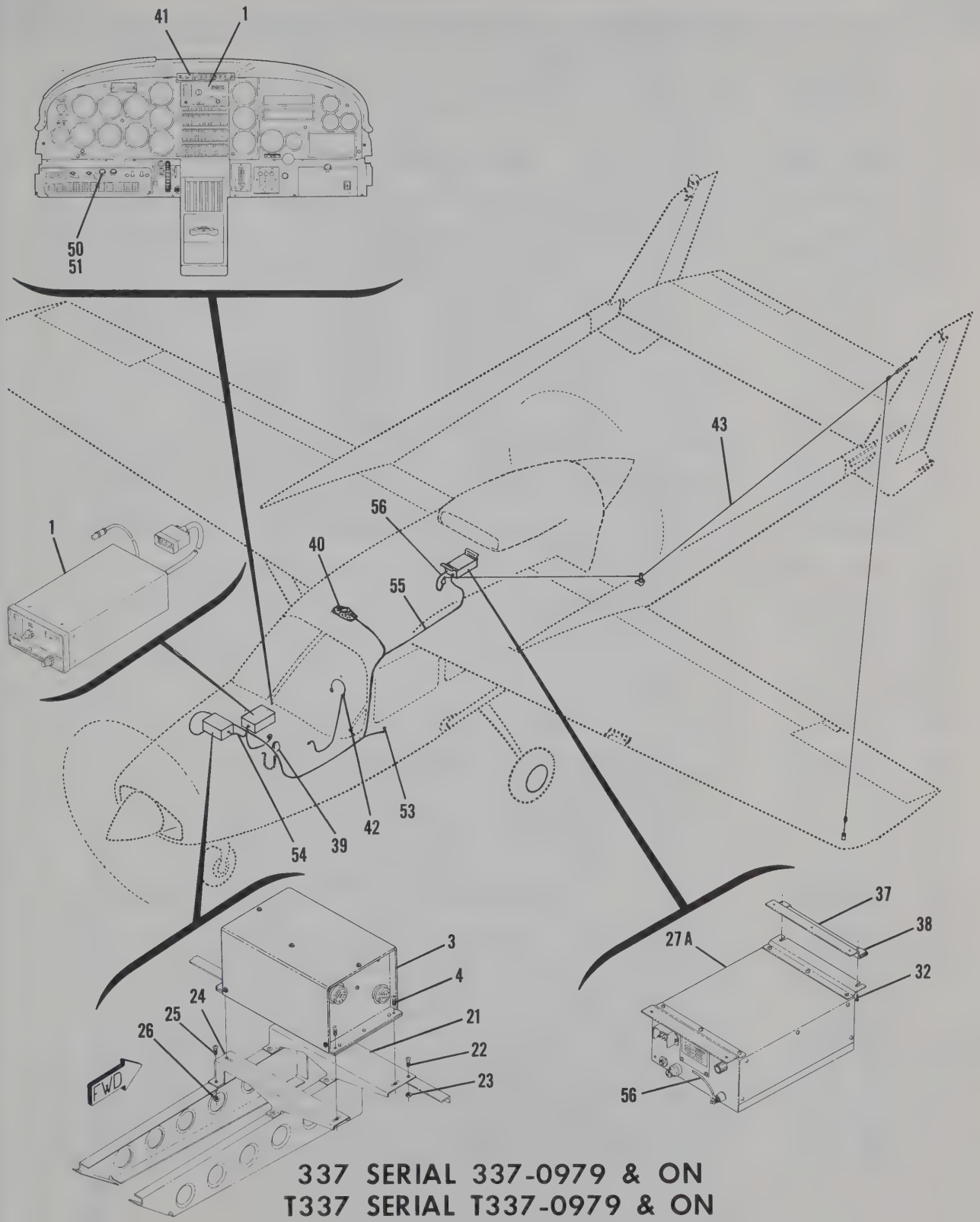

337 SERIAL 337-0979 & ON
T337 SERIAL T337-0979 & ON

Figure 1-7. Cessna 300 HF Transceiver (Type PT-10A) Radio Installation (Sheet 8 of 8)

FIGURE AND INDEX NO.	PART NUMBER	DESCRIPTION 1 2 3 4 5 6 7	UNITS PER ASSY	USABLE ON CODE
1-7-		CESSNA 300 HF TRANSCEIVER -TYPE PT-10A- RADIO INSTALLATION	NP	
		ALL MODELS EXCEPT 150 & 188		
- 1	C582103-0101	TRANSCEIVER	1	
		ATTACHING PARTS		
	S1022Z6-8	SCREW	4	
	NAS446-2-3	NUT	4	
		---*---		
- 2	C582103-0201	REMOTE UNIT 14 VOLT SYSTEM ONLY PNTR	1	
- 3	C582103-0301	REMOTE UNIT 28 VOLT SYSTEM ONLY PNTR	1	
		ATTACHING PARTS		
- 4	AN515-8R8	SCREW 172, 177, 180, 182, 185, 210 SERIES & 337 SERIES ONLY	4	
- 5	AN936A8	WASHER 172, 177, 182 & 210 SERIES	4	
- 6	S1648-08-75	RIVNUT 172, 177, 182 & 210 SERIES	4	
- 7	AN515-8R12	SCREW 206 SERIES & 207 SERIES ONLY	4	
- 8	S355-2	SPACER 206 SERIES & 207 SERIES ONLY	8	
- 9	NAS679A08	NUT 180, 185, 206 SERIES & 207 SERIES ONLY	4	
		---*---		
- 10	0770713-1	ANGLE 180 & 185 ONLY	1	
		ATTACHING PARTS		
- 11	AN515-8R7	SCREW	2	
- 12	S355	SPACER	2	
- 13	NAS679A08	NUT	2	
		---*---		
- 14	C770712-1	ANGLE STD EQUIPMENT ON AIRCRAFT 180 & 185 ONLY	REF	
- 15	C770049-1	ANGLE 180 & 185 ONLY	1	
		ATTACHING PARTS		
- 16	AN515-8R10	SCREW	2	
- 17	S355-2	SPACER	2	
- 18	NAS679A08	NUT	2	
		---*---		
- 19	1270627-89	ATTACH ANGLE 206 SERIES & 207 SERIES ONLY	2	
		ATTACHING PARTS		
- 20	AN520-10R6	SCREW	4	
		---*---		
- 21	1513629-10	SUPPORT ASSY 337 SERIES ONLY	1	
		ATTACHING PARTS		
- 22	AN515-8R8	SCREW	5	
- 23	NAS679A08	NUT	5	
		---*---		
- 24	1513635-8	SUPPORT ASSY 337 SERIES ONLY	1	
		ATTACHING PARTS		
- 25	AN515-8R8	SCREW	5	
- 26	NAS679A08	NUT	5	
		---*---		
- 27	C589502-0101	ANTENNA LOAD BOX 14 VOLT SYSTEM ONLY	1	
-27A	C589502-0201	ANTENNA LOAD BOX 28 VOLT SYSTEM ONLY	1	
		ATTACHING PARTS		
- 28	AN515-8R8	SCREW 172, 177, 180, 182, 185, 206 SERIES 207 SERIES & 210 SERIES ONLY	4	
- 29	AN960-8L	WASHER 177, 180, 182, 185, 206 SERIES, 207 SERIES & 210 - SERIES ONLY	4	
- 30	NAS43DD3-32	SPACER 172 ONLY	4	
- 31	NAS679A08	NUT 172, 182, 206 SERIES, 207 SERIES & 210 SERIES ONLY	4	
- 32	AN1021Z6-4	SCREW 337 SERIES ONLY	4	
		---*---		
- 33	1712130-1	SUPPORT ASSY 177 ONLY	2	
- 34	C770735-1	SUPPORT ASSY - LH 180 & 185 ONLY	1	
- 35	C770735-2	SUPPORT ASSY - RH 180 & 185 ONLY	1	
- 36	1212015-1	SUPPORT ASSY 182, 206 SERIES, 207 SERIES & 210 SERIES ONLY	4	
- 37	1512607-3	SUPPORT ASSY 337 SERIES ONLY	1	
	1512607-4	SUPPORT	1	
- 38	NAS395-6-3	NUT	2	
- 39	SEE FIG 4-3	MICROPHONE INSTALLATION	1	
- 40	SEE FIG 4-2	SPEAKER INSTALLATION	1	
- 41	SEE FIG 4-1	TRANSMITTER SELECTOR SWITCH & AUDIO AMPLIFIER INSTL	AR	
- 42	SEE FIG 4-4	HEADSET INSTALLATION	1	
	SEE FIG 5-1	RADIO COOLING INSTALLATION	AR	
- 43	SEE FIG 3-5	H.F. ANTENNA INSTALLATION	1	
	SEE FIG 5-2	RADIO NOISE FILTER INSTALLATION	AR	

CONTINUED ON NEXT PAGE

FIGURE AND INDEX NO.	PART NUMBER	DESCRIPTION 1 2 3 4 5 6 7	UNITS PER ASSY	USABLE ON CODE
1-7- 44	0413126-5	RHEOSTAT - RADIO DIAL LIGHT 172, 177, 180 & 185 ONLY	1	
- 45	S1390-5	KNOB - RHEOSTAT 172, 180 & 185 ONLY	1	
- 46	S1753-6	KNOB - RHEOSTAT 177 ONLY	1	
- 47	S1780-4	INSERT - KNOB 177 ONLY	1	
- 48	S1880-3	RHEOSTAT - RADIO DIAL LIGHT 182, 206 SERIES, 207 SERIES & 210 SERIES ONLY	1	
- 49	S1753-7	KNOB - RHEOSTAT 182, 206 SERIES, 207 SERIES & 210 SERIES ONLY	1	
- 50	1570164-1	SWITCH ASSY-LIGHT DIMMING 337 SERIES ONLY	1	
	9341GL	RHEOSTAT CPH	1	
	S1832-1	SWITCH	1	
- 51	S1753-6	KNOB-RHEOSTAT 337 SERIES ONLY	1	
- 52	S1360-15	CIRCUIT BREAKER ALL MODELS EXCEPT 337 SERIES	1	
- 53	S1360-10	CIRCUIT BREAKER 337 SERIES ONLY	1	
- 54		MAIN CABLE ASSY - TRANSCEIVER TO POWER SUPPLY, ANTENNA LOAD - BOX AND AUDIO JUNCTION BOX	NP	
	17027	CONNECTOR CONNECTS TO TRANSCEIVER PNTR	1	
	17028	CONNECTOR CONNECTS TO POWER SUPPLY PNTR	1	
	17005	CONNECTOR CONNECTS TO ANT LOAD BOX PNTR	1	
	S1838-2	HOUSING CONNECTS TO AUDIO JUNCTION BOX USED ONLY -- ON FIRST RADIO INSTALLATION	1	
	S1838-1	HOUSING CONNECTS TO AUDIO JUNCTION BOX USED ONLY -- ON SECOND RADIO INSTALLATIONS	AR	
	S1838-3	HOUSING CONNECTS TO AUDIO JUNCTION BOX USED ONLY -- ON THIRD RADIO INSTALLATIONS	AR	
- 55		CABLE ASSY - TRANSCEIVER TO ANTENNA LOAD BOX	1	
	RG-58A/U	COAXIAL CABLE - BULK ITEM	1	
	17025	CONNECTOR CONNECTS TO TRANSCEIVER PNTR	1	
	17008	CONNECTOR CONNECTS TO ANTENNA LOAD BOX PNTR	1	
- 56		CABLE ASSY ANT LOAD BOX TO HF ANTENNA	NP	
	8899	WIRE BULK ITEM BDN	AR	
	S1367-1-10	TERMINAL	2	

CESSNA 400 ADF RADIO INSTALLATION

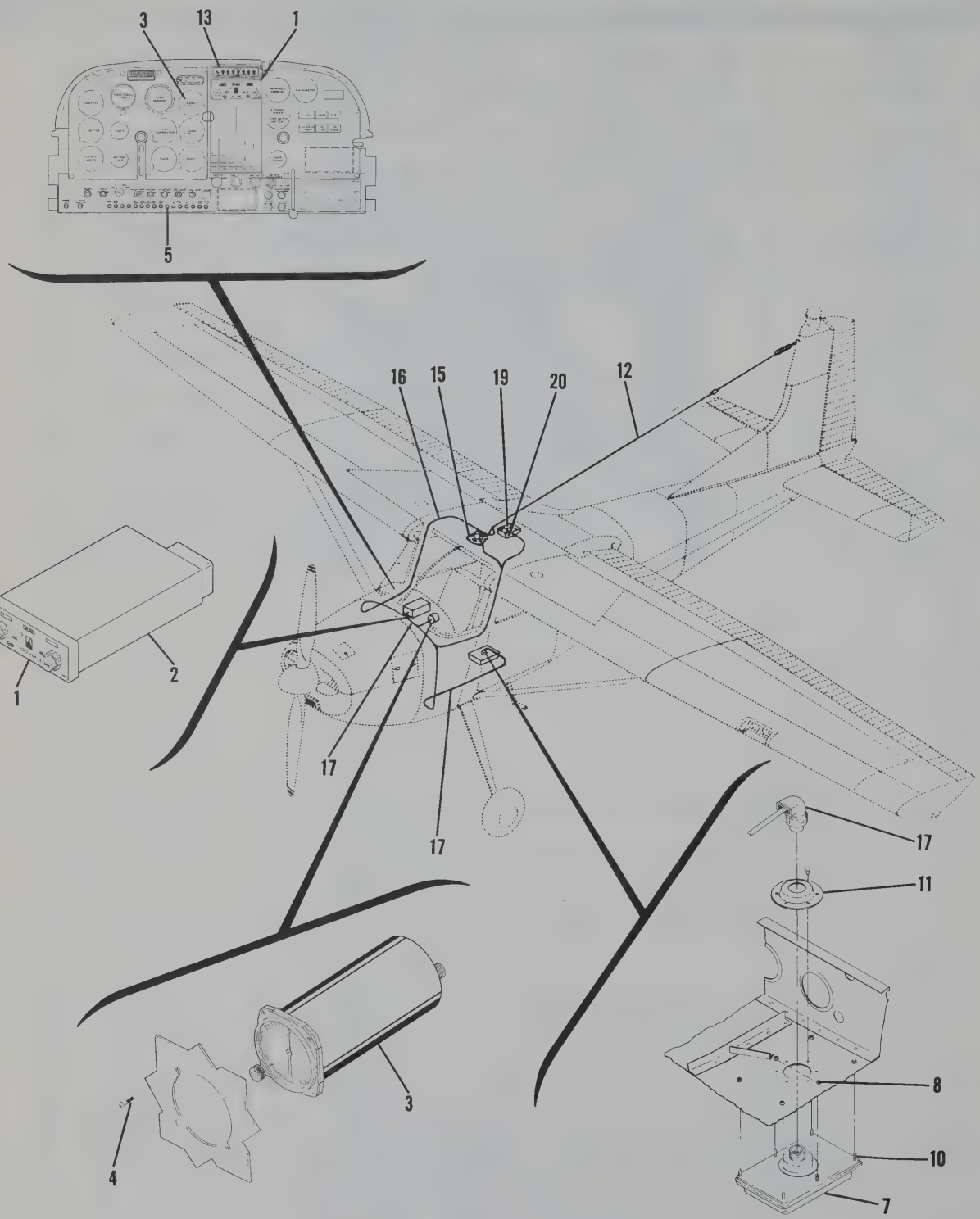

180 SERIAL 18051994 & ON
185 SERIAL 185-1448 & ON

Figure 1-8. Cessna 400 ADF (Type R-324A) Radio Installation (Sheet 1 of 6)

CESSNA 400 ADF RADIO INSTALLATION

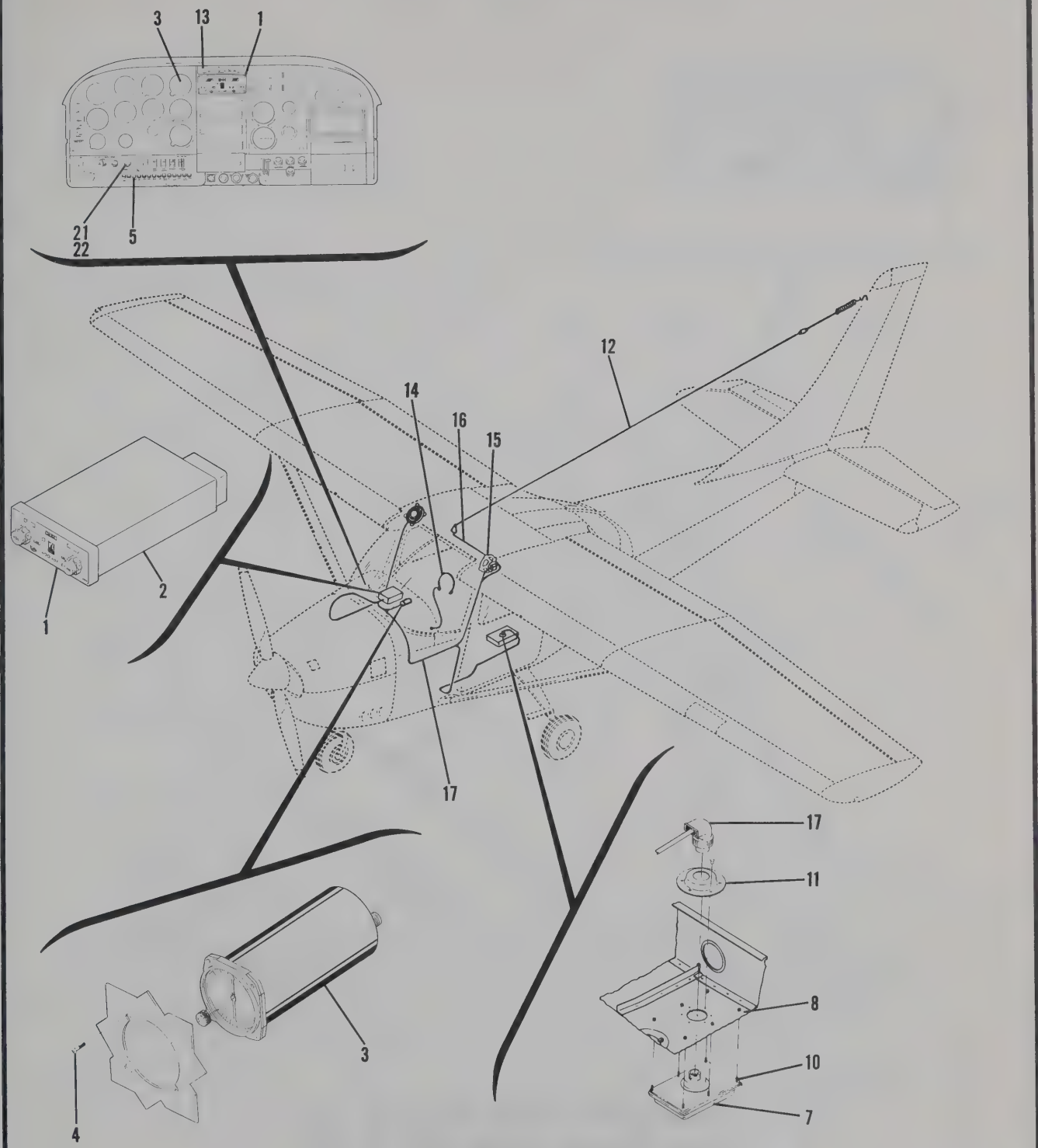

182 SERIAL 18259306 & ON
A182 SERIAL A182-0117 & ON

Figure 1-8. Cessna 400 ADF (Type R-324A) Radio Installation (Sheet 2 of 6)

CESSNA 400 ADF RADIO INSTALLATION

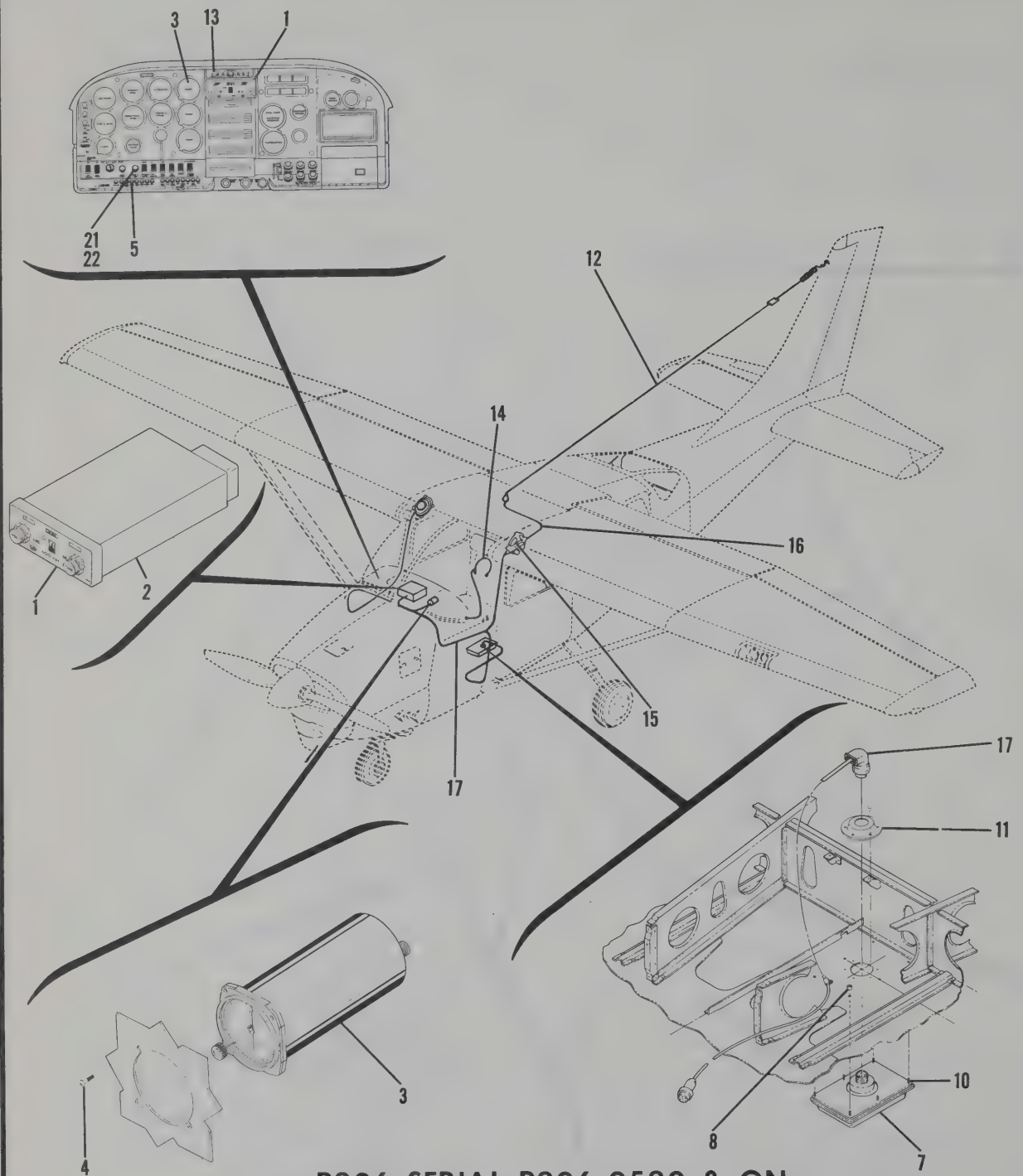

P206 SERIAL P206-0520 & ON
U206 SERIAL U206-1235 & ON
TP206 SERIAL TP206-0520 & ON
TU206 SERIAL TU206-1235 & ON

Figure 1-8. Cessna 400 ADF (Type R-324A) Radio Installation (Sheet 3 of 6)

CESSNA 400 ADF RADIO INSTALLATION

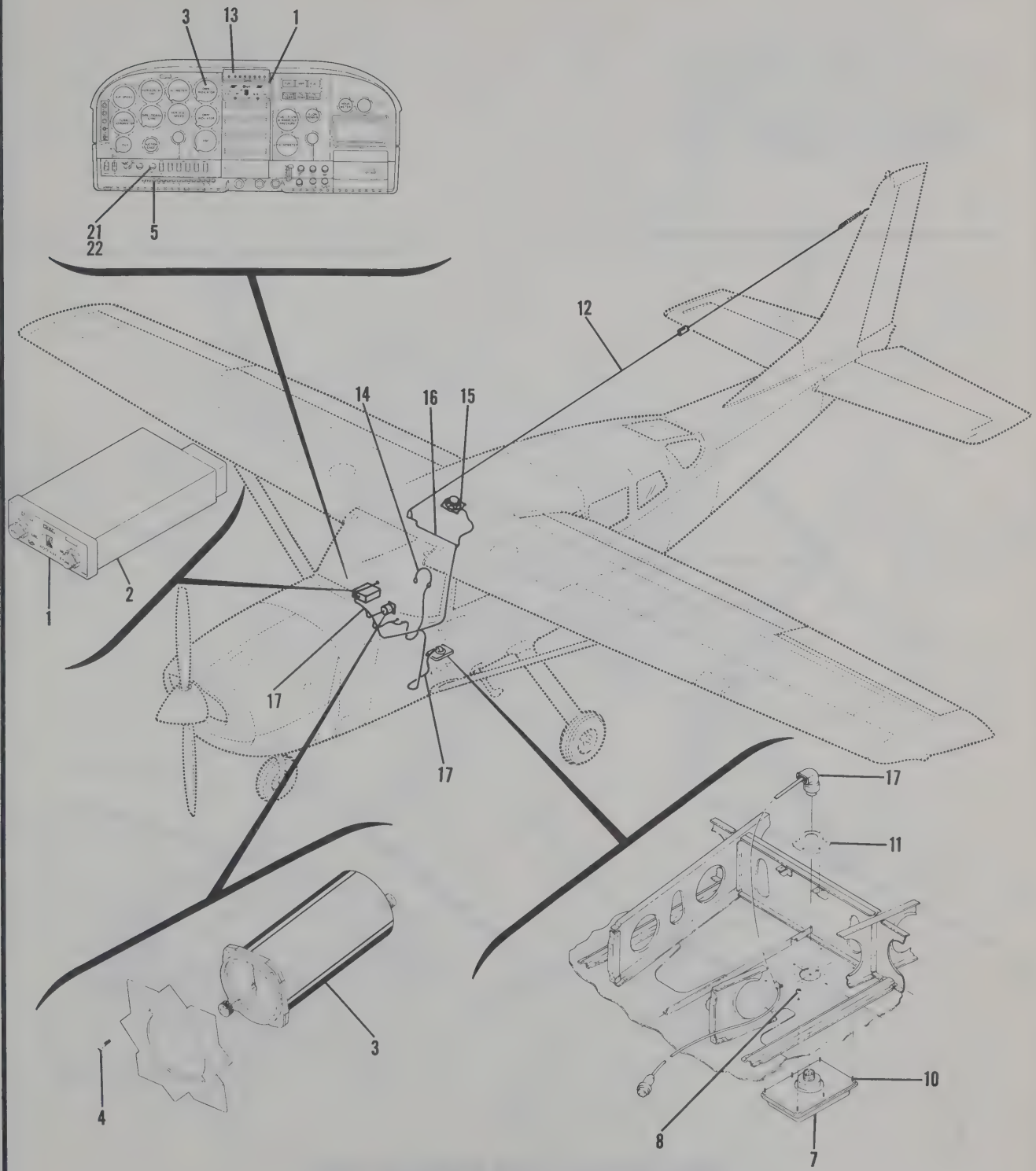

207 SERIAL 207-0001 & ON
T207 SERIAL 207-0001 & ON

Figure 1-8. Cessna 400 ADF (Type R-324A) Radio Installation (Sheet 4 of 6)

CESSNA 400 ADF RADIO INSTALLATION

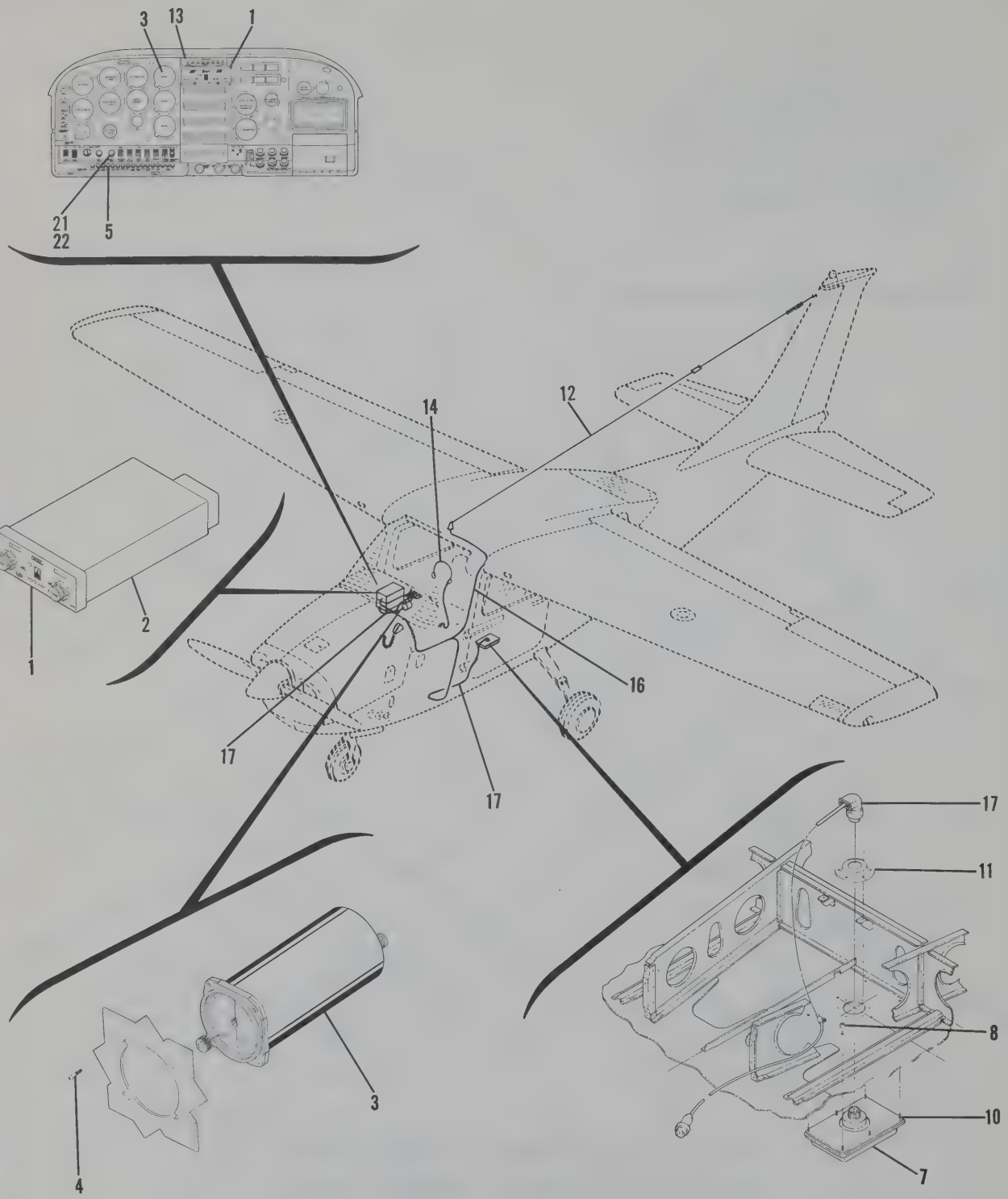

210 SERIAL 21059062 & ON
T210 SERIAL T210-0393 & ON

Figure 1-8. Cessna 400 ADF (Type R-324A) Radio Installation (Sheet 5 of 6)

CESSNA 400 ADF RADIO INSTALLATION

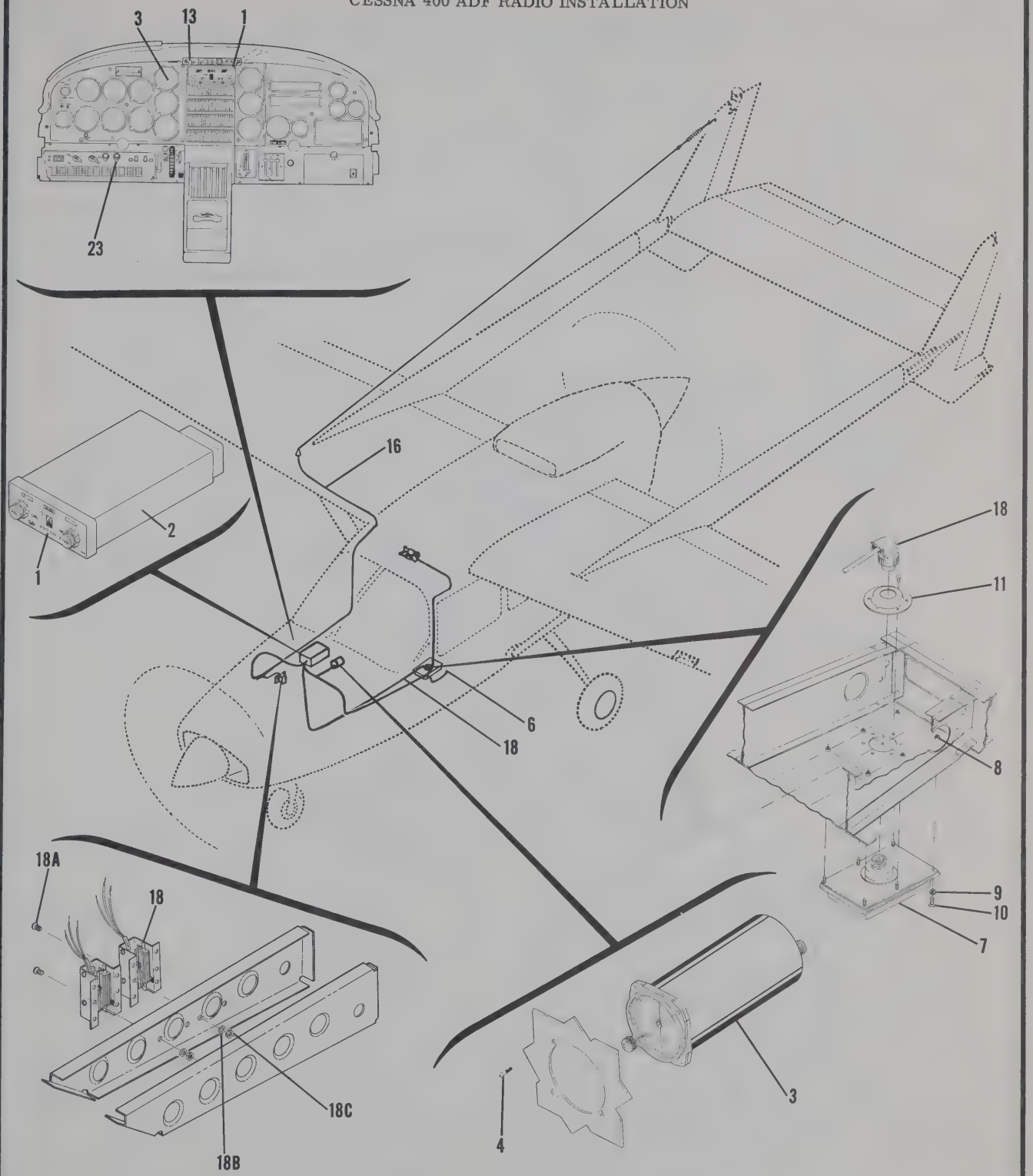

337 SERIAL 337-0979 & ON
T337 SERIAL T337-0979 & ON

Figure 1-8. Cessna 400 ADF (Type R-324A) Radio Installation (Sheet 6 of 6)

FIGURE AND INDEX NO.	PART NUMBER	DESCRIPTION 1 2 3 4 5 6 7	UNITS PER ASSY	USABLE ON CODE
1-8-		CESSNA 400 ADF -TYPE R-324A- RADIO INSTALLATION ----------	NP	
		ALL MODELS EXCEPT 150, 172, 177 & 188		
- 1	36380-1000	RECEIVER WITH BFO ARC ----------	1	
- 2	35209	MOUNTING - RECEIVER ARC ----------	1	
		ATTACHING PARTS		
	S1022Z6-6	SCREW ----------	4	
	NAS446-2-3	NUT ----------	4	
		---*---		
- 3	38450-0003	INDICATOR ARC ----------	1	
		ATTACHING PARTS		
- 4	AN515B6R12	SCREW ----------	3	
		---*---		
- 5	S1360-5	CIRCUIT BREAKER ALL MODELS EXCEPT 337 SERIES ONLY --------	1	
- 6	S1360-2	CIRCUIT BREAKER 337 SERIES ONLY ----------	1	
- 7	36420-1100	LOOP ANTENNA ARC ----------	1	
		ATTACHING PARTS		
- 8	A6K75	RIVNUT ----------	6	
- 9	AN936A6	WASHER ----------	6	
- 10	AN515-6R12	SCREW ----------	6	
		---*---		
- 11	1511005-1	SHIELD ----------	1	
- 12	SEE FIG 3-6	ADF SENSE ANTENNA INSTALLATION ----------	1	
	SEE FIG 5-2	RADIO NOISE FILTER INSTALLATION ----------	1	
- 13	SEE FIG 4-1	AUDIO TRANSMITTER SELECTOR SWITCH INSTALLATION ----------	1	
- 14	SEE FIG 4-4	HEADPHONE INSTALLATION ----------	1	
- 15	SEE FIG 4-2	SPEAKER INSTALLATION ----------	1	
	33827-0000	LOOP CABLE ASSY LOOP ANT TO GONIOMETER INDICATOR ARC	1	
- 16		CABLE ASSY RECEIVER TO SENSE ANT ----------	1	
	K-109A	COAXIAL CABLE BULK ITEM ----------	AR	
	85075	CONNECTOR ARC ----------	2	
	8661	SHIELDING BULK ITEM ARC ----------	AR	
	S1367-3-8	TERMINAL ----------	1	
- 17	38422-0014	CABLE ASSY - MAIN RECEIVER TO GONIOMETER INDICATOR ------	1	
		AND AUDIO JUNCTION BOX WIRES CONNECT TO P3 ON		
		AUDIO JUNCTION BOX ARC ALL MODELS EXCEPT 337		
		SERIES ONLY		
- 18	38422-0028	CABLE ASSY & REMOTE RESISTOR BOX KIT MAIN CABLE ASSY ----	1	
		CONNECTS FROM RECEIVER TO INDICATOR AUDIO JUNCTION BOX		
		AND RESISTOR BOX ARC 337 SERIES ONLY		
		ATTACHING PARTS		
-18A	AN515-6R8	SCREW ----------	4	
-18B	AN936A6	WASHER ----------	4	
-18C	AN340-6	NUT ----------	4	
		---*---		
- 19	0413126-5	RHEOSTAT 180 & 185 ONLY ----------	1	
- 20	S1390-5	KNOB - RHEOSTAT 180 & 185 ONLY ----------	1	
- 21	S1880-3	RHEOSTAT 182, 206, 207 & 210 ONLY ----------	1	
- 22	S1753-7	KNOB - RHEOSTAT 182, 206, 207 & 210 ONLY ----------	1	
- 23	157C164-1	SWITCH ASSY - LIGHT DIM 337 SERIES ONLY ----------	1	
	9341G6	RHEOSTAT CPH 337 SERIES ONLY ----------	1	
	S1832-1	SWITCH 337 SERIES ONLY ----------	1	

CESSNA 400 TRANSCEIVER RADIO INSTALLATION

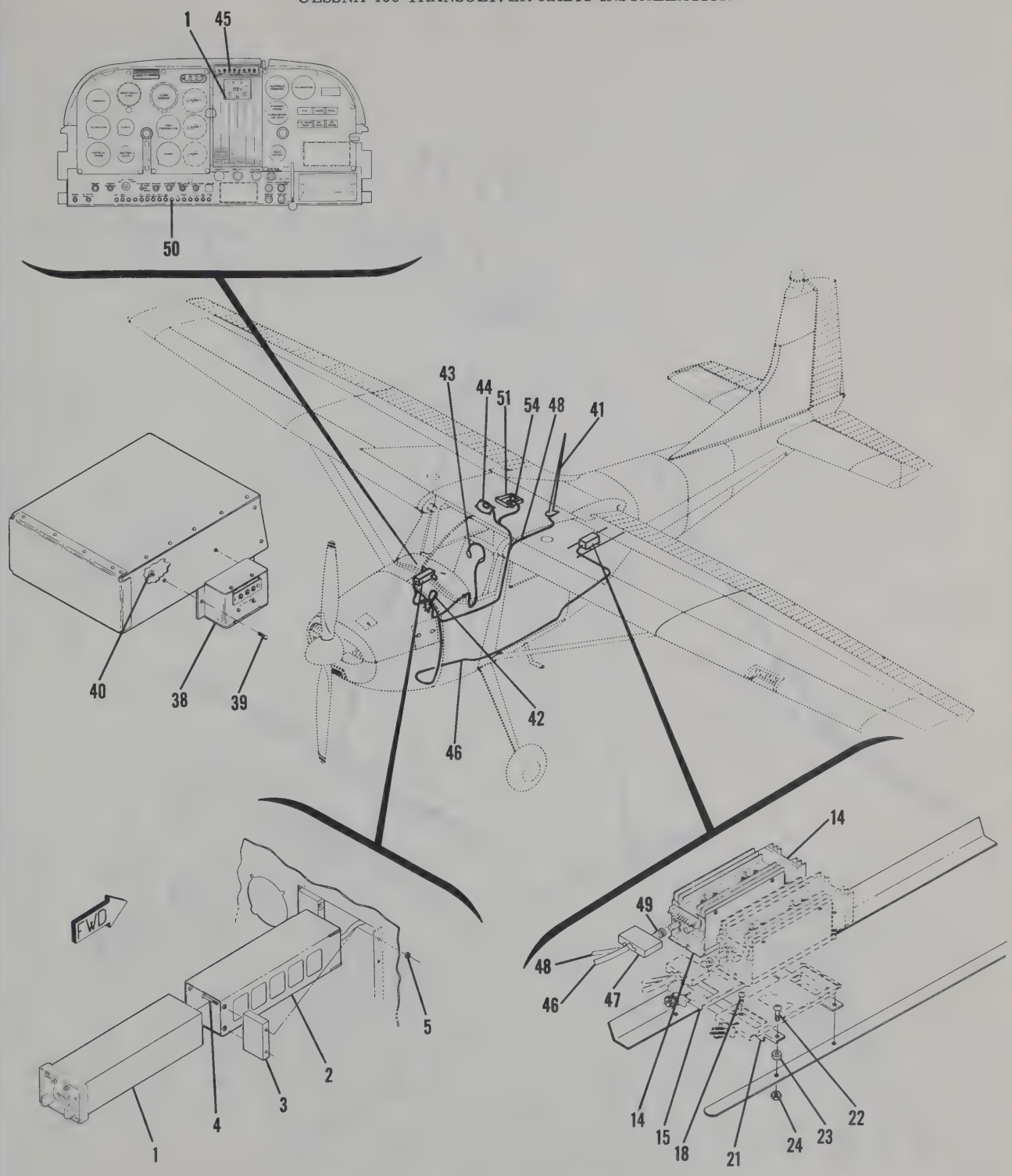

180 SERIAL 18051994 & ON
185 SERIAL 185-1448 & ON

Figure 1-9. Cessna 400 Transceiver (Type RT-532A) Radio Installation (Sheet 1 of 7)

CESSNA 400 TRANSCEIVER RADIO INSTALLATION

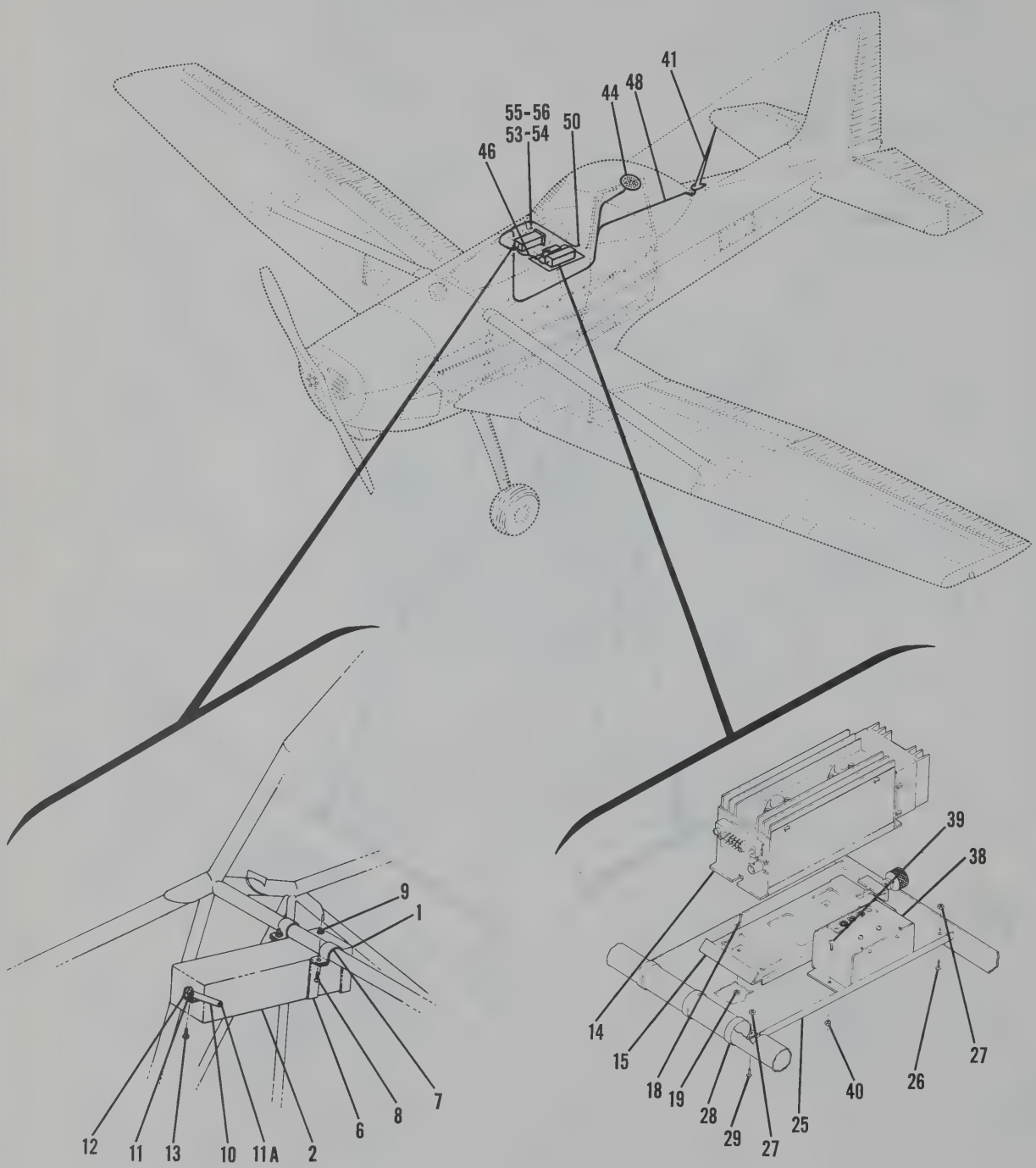

188 SERIAL 188-0471 & ON
A188 SERIAL A188-0471 & ON

Figure 1-9. Cessna 400 Transceiver (Type RT-532A) Radio Installation (Sheet 2 of 7)

CESSNA 400 TRANSCEIVER RADIO INSTALLATION

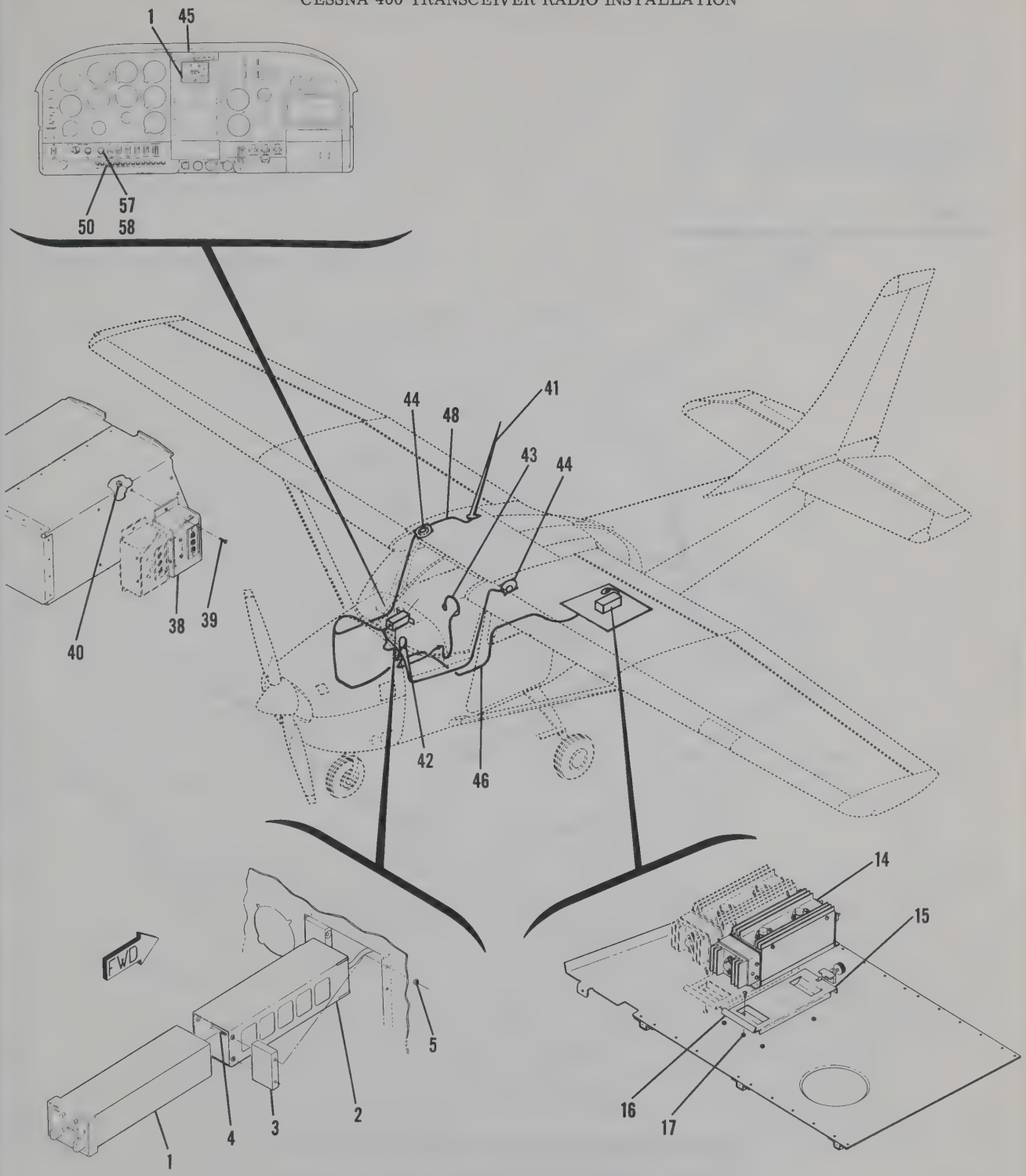

182 SERIAL 18259306 & ON
A182 SERIAL A182-0117 & ON

Figure 1-9. Cessna 400 Transceiver (Type RT-532A) Radio Installation (Sheet 3 of 7)

CESSNA 400 TRANSCEIVER RADIO INSTALLATION

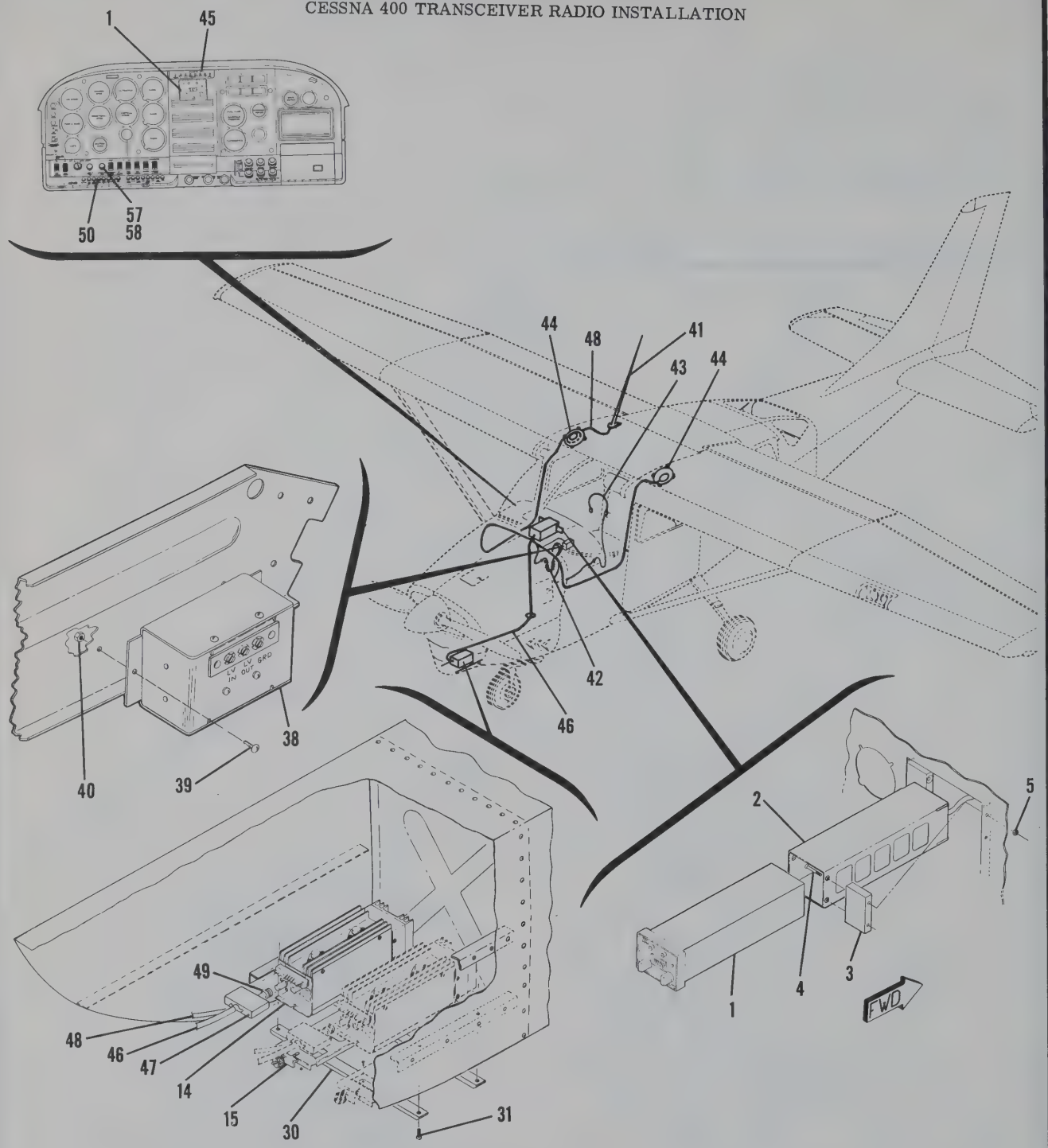

P206 SERIAL P206-0520 & ON
U206 SERIAL U206-1235 & ON
TP206 SERIAL TP206-0520 & ON
TU206 SERIAL TU206-1235 & ON

Figure 1-9. Cessna 400 Transceiver (Type RT-532A) Radio Installation (Sheet 4 of 7)

CESSNA 400 TRANSCEIVER RADIO INSTALLATION

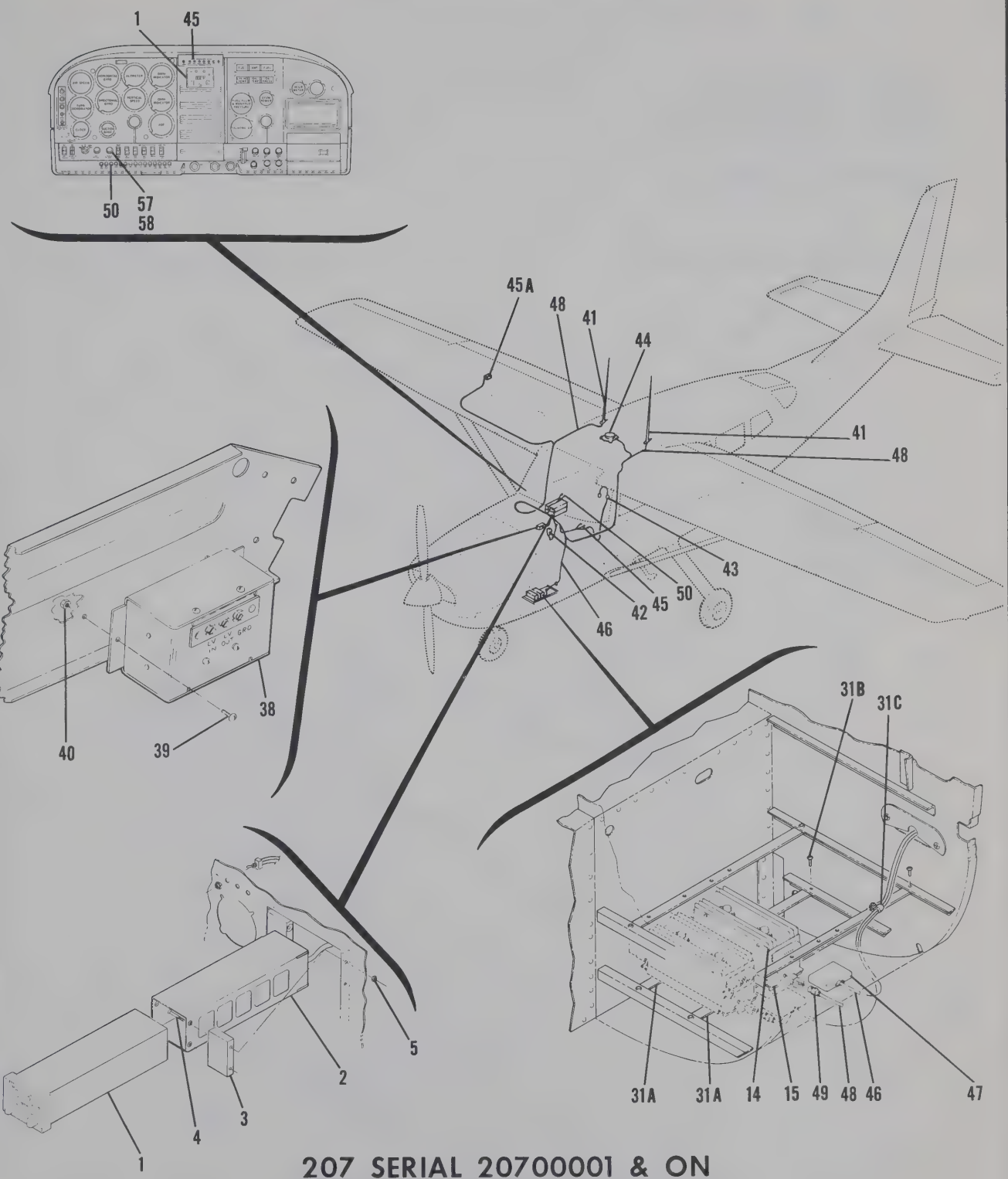

207 SERIAL 20700001 & ON
T207 SERIAL 20700001 & ON

Figure 1-9. Cessna 400 Transceiver (Type RT-532A) Radio Installation (Sheet 5 of 7)

CESSNA 400 TRANSCEIVER RADIO INSTALLATION

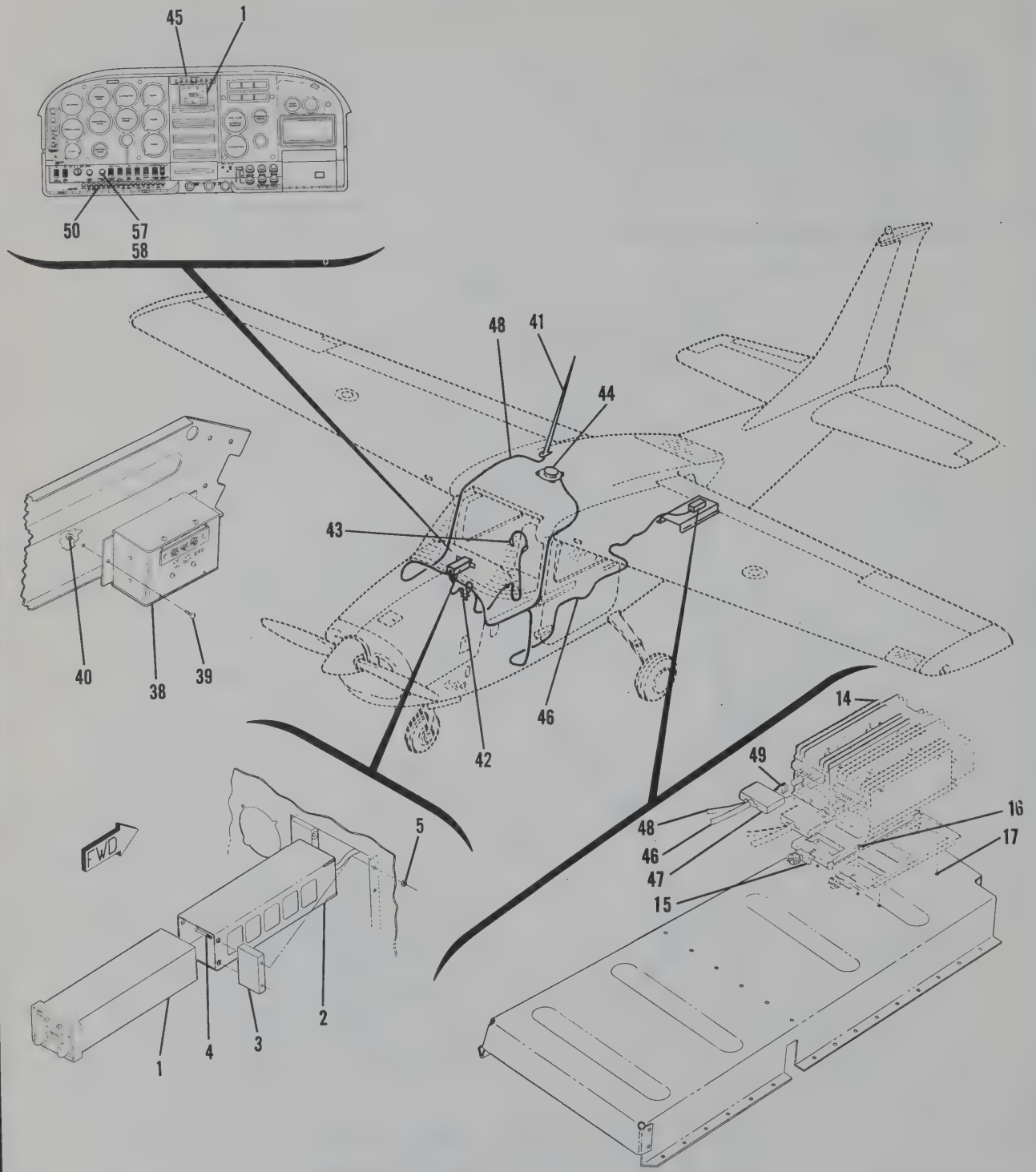

210 SERIAL 21059062 & ON
T210 SERIAL T210-0393 & ON

Figure 1-9. Cessna 400 Transceiver (Type RT-532A) Radio Installation (Sheet 6 of 7)

CESSNA 400 TRANSCEIVER RADIO INSTALLATION

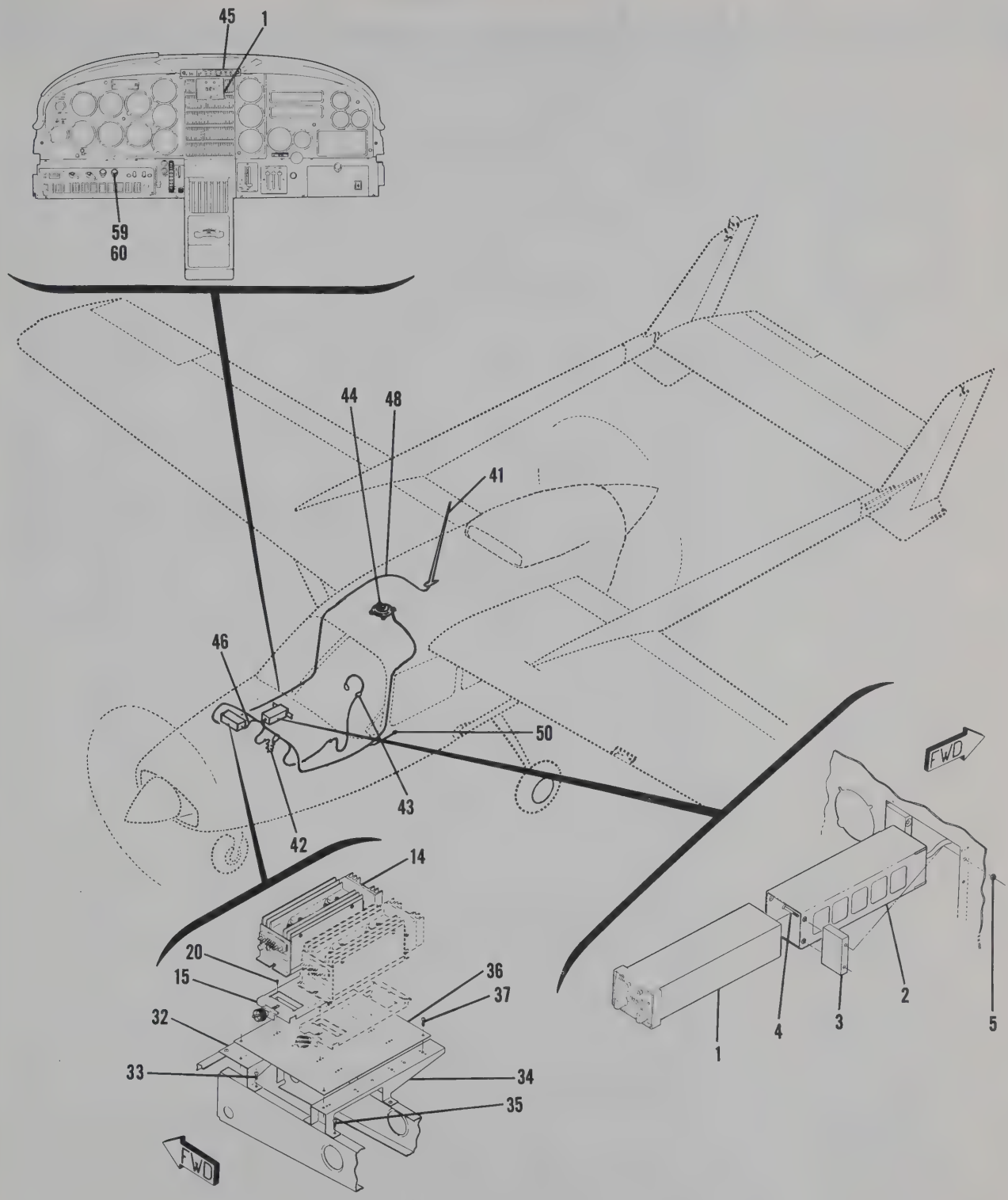

337 SERIAL 337-0979 & ON
T337 SERIAL T337-0979 & ON

Figure 1-9. Cessna 400 Transceiver (Type RT-532A) Radio Installation (Sheet 7 of 7)

FIGURE AND INDEX NO.	PART NUMBER	DESCRIPTION 1 2 3 4 5 6 7	UNITS PER ASSY	USABLE ON CODE
1-9-		CESSNA 400 TRANSCEIVER RADIO INSTALLATION - TYPE RT-532 ------- ALL MODELS EXCEPT 150, 172 & 177	NP	
- 1	3357C-1000	RECEIVER-TRANSMITTER TYPE RT-532A ARC ----------	1	
- 2	37525-0081	MOUNTING KIT ARC ---------- ATTACHING PARTS	1	
- 3	1270056-1	SPACER ALL MODELS EXCEPT 188 ----------	2	
- 4	AN507-632R32	SCREW ALL MODELS EXCEPT 188 ----------	4	
- 5	NAS679A06	NUT ALL MODELS EXCEPT 188 ----------	4	
- 6	1670021-1	BRACKET 188 ONLY ----------	1	
- 7	AN742D16	CLAMP 188 ONLY ----------	2	
- 8	AN515-8R10	SCREW 188 ONLY ----------	2	
- 9	NAS679A08	NUT 188 ONLY ---------- ---*---	2	
- 10	1270465-1	SUPPORT STRAP 188 ONLY ---------- ATTACHING PARTS	2	
- 11	AN515-8R6	SCREW ----------	2	
-11A	AN515-8R8	SCREW ----------	2	
	NAS679A08	NUT ---------- ---*---	2	
- 12	S1154-1	BRACKET 188 ONLY ---------- ATTACHING PARTS	2	
- 13	S1021Z8-6	SCREW ---------- ---*---	2	
- 14	3660C-CC00	REMOTE UNIT TYPE RTA-532B ARC ----------	1	
- 15	3554C-0C00	MOUNTING - REMOTE UNIT TYPE M-532A ARC ---------- ATTACHING PARTS	1	
- 16	AN515-6R10	SCREW 182 SERIES & 210 SERIES ONLY ----------	4	
- 17	S1648-06-75	RIVNUT 182 SERIES & 210 SERIES ONLY ----------	4	
- 18	AN515-6R8	SCREW 180, 185, 188 & 207 SERIES ONLY ----------	4	
- 19	NAS679A06	NUT 180, 185 & 188 ONLY ----------	4	
- 20	AN515-8R10	SCREW 337 ONLY ---------- ---*---	4	
- 21	C770713-1	ANGLE 180 & 185 ONLY ---------- ATTACHING PARTS	2	
- 22	AN515-8R10	SCREW ----------	4	
- 23	S355	SPACER ----------	4	
- 24	NAS679A06	NUT ---------- ---*---	4	
- 25	1670020-1	SHELF 188 ONLY ---------- ATTACHING PARTS	1	
- 26	AN515-8R8	SCREW ----------	3	
- 27	NAS679A08	NUT ----------	6	
- 28	AN742D16	CLAMP ----------	3	
- 29	AN515-8R10	SCREW ---------- ---*---	3	
- 30	1270627-91	ATTACH ANGLE 206 SERIES ONLY ---------- ATTACHING PARTS	2	
-31A	1213904-1	ATTACH ANGLE ASSY 207 SERIES ONLY ---------- ATTACHING PARTS	2	
-31B	AN520-10R6	SCREW ---------- ---*---	4	
-31C	MS21919DG6	CLAMP 207 ONLY ---------- ATTACHING PARTS	1	
	AN515-8R8	SCREW ----------	1	
	NAS679A08	NUT ----------	1	
- 31	AN520-10R6	SCREW ---------- ---*---	4	
- 32	1513629-1	SUPPORT ASSY 337 SERIES ONLY ---------- ATTACHING PARTS	1	
- 33	AN515-8R8	SCREW ----------	5	
	NAS679A08	NUT ---------- ---*---	5	
- 34	1513635-1	SUPPORT ASSY 337 SERIES ONLY ---------- ATTACHING PARTS	1	
- 35	AN515-8R8	SCREW ----------	4	
	NAS679A08	NUT ---------- ---*---	4	
- 36	1513313-3	PLATE ASSY 337 SERIES ONLY ---------- ATTACHING PARTS	1	
- 37	AN515-8R8	SCREW ---------- ---*---	4	

CONTINUED ON NEXT PAGE

FIGURE AND INDEX NO.	PART NUMBER	DESCRIPTION 1 2 3 4 5 6 7	UNITS PER ASSY	USABLE ON CODE
1-9- 38	37243-0000	FILTER ASSY 12 VOLT AIRCRAFT ONLY ARC	1	
		ATTACHING PARTS		
- 39	AN515-6R8	SCREW	2	
- 40	NAS679A06	NUT	2	
		---*---		
- 41	SEE FIG 3-1	VHF ANTENNA INSTALLATION	1	
- 43	SEE FIG 4-3	MICROPHONE INSTALLATION	1	
- 43	SEE FIG 4-4	HEADPHONE INSTALLATION	1	
- 44	SEE FIG 4-2	SPEAKER INSTALLATION	1	
- 45	SEE FIG 4-1	TRANSMITTER SELECTOR SWITCH INSTALLATION	1	
-45A	SEE FIG 5-2	RADIO NOISE FILTER INSTALLATION	AR	
- 46		CABLE ASSEMBLY-MAIN	NP	
	RG-58A/U	COAXIAL CABLE-BULK ITEM	AR	
	35693-0003	CONNECTOR ATTACHES TO RECEIVER-TRANSMITTER ARC	1	
	35032-0012	CONTACT ATTACHES TO RECEIVER-TRANSMITTER ARC	1	
- 47	36363-0000	CONNECTOR KIT ATTACHES TO REMOTE UNIT ARC	1	
	S1838-2	HOUSING	1	
- 48		CABLE ASSEMBLY-VHF ANTENNA	NP	
	RG-58A/U	COAXIAL CABLE BULK ITEM	AR	
- 49	UG-88C/U	CONNECTOR CONNECTS TO RECEIVER-TRANSMITTER	1	
	UG-913/U	CONNECTOR CONNECTS TO VHF ANTENNA	1	
- 50	S1360-5	CIRCUIT BREAKER	1	
- 51	0413126-5	RHEOSTAT 180 & 185 ONLY	1	
- 52	S1390-5	KNOB 180 & 185 ONLY	1	
- 53	S1880-3	RHEOSTAT-12 VOLT 188 ONLY	1	
- 54	S1390-5	KNOB 188 ONLY	1	
- 55	S1880-5	RHEOSTAT-24 VOLT 188 ONLY	1	
- 56	S1390-5	KNOB 188 ONLY	1	
- 57	S1880-3	RHEOSTAT 182, 206 SERIES, 207 SERIES, & 210 SERIES ONLY	1	
- 58	S1753-7	KNOB 182, 206 SERIES, 207 SERIES, & 210 SERIES ONLY	1	
- 59	1570164-1	SWITCH ASSY-LIGHT DIM 337 SERIES ONLY	1	
	9341GL	RHEOSTAT CPH	1	
	S1832-1	SWITCH	1	
- 60	S1753-6	KNOB 337 SERIES ONLY	1	

CESSNA 400 NAV/COM RADIO INSTALLATION

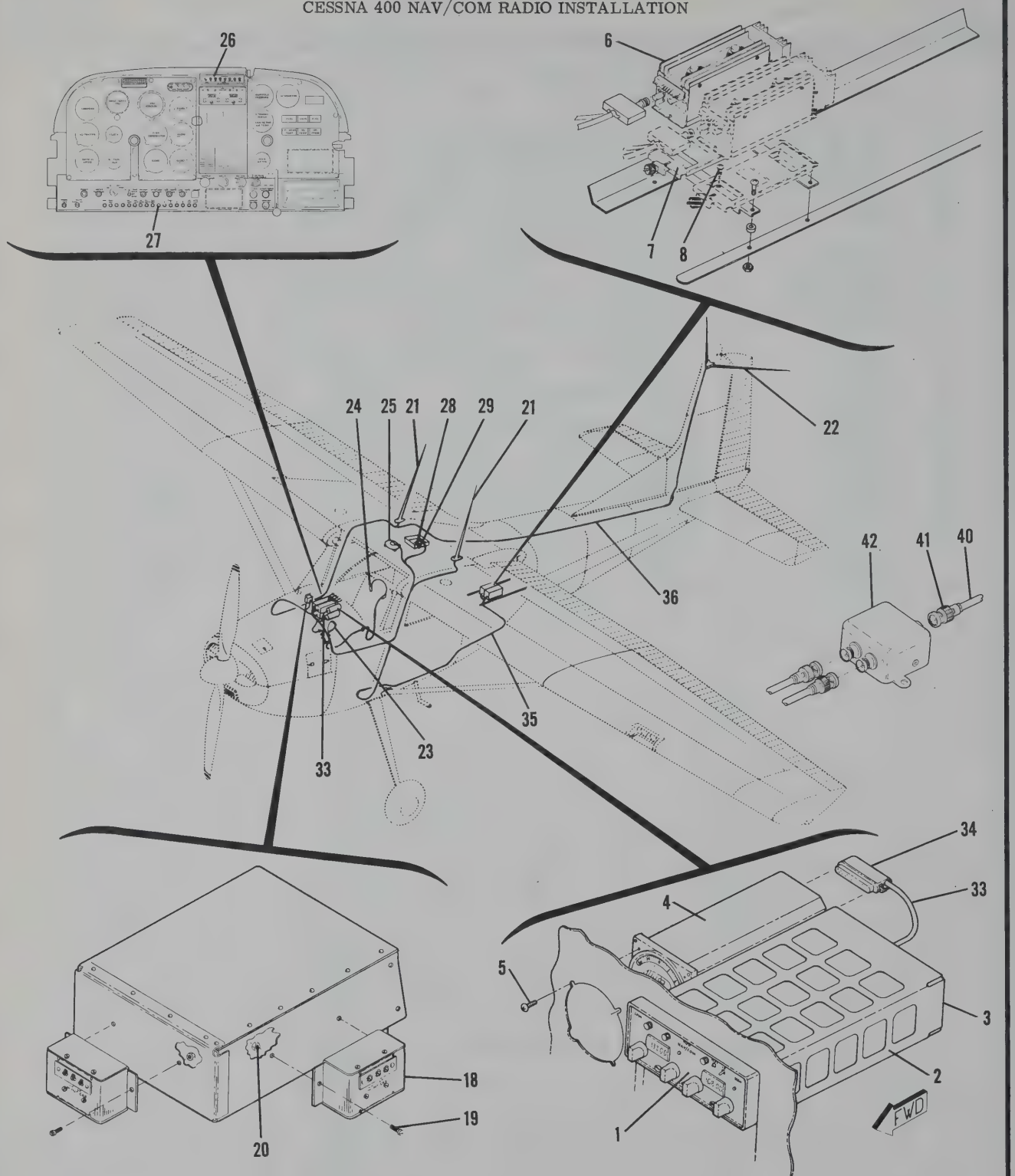

180 SERIAL 18051994 & ON
185 SERIAL 185-1448 & ON

Figure 1-10. Cessna 400 Nav/Com (Type RT-522A) Radio Installation (Sheet 1 of 6)

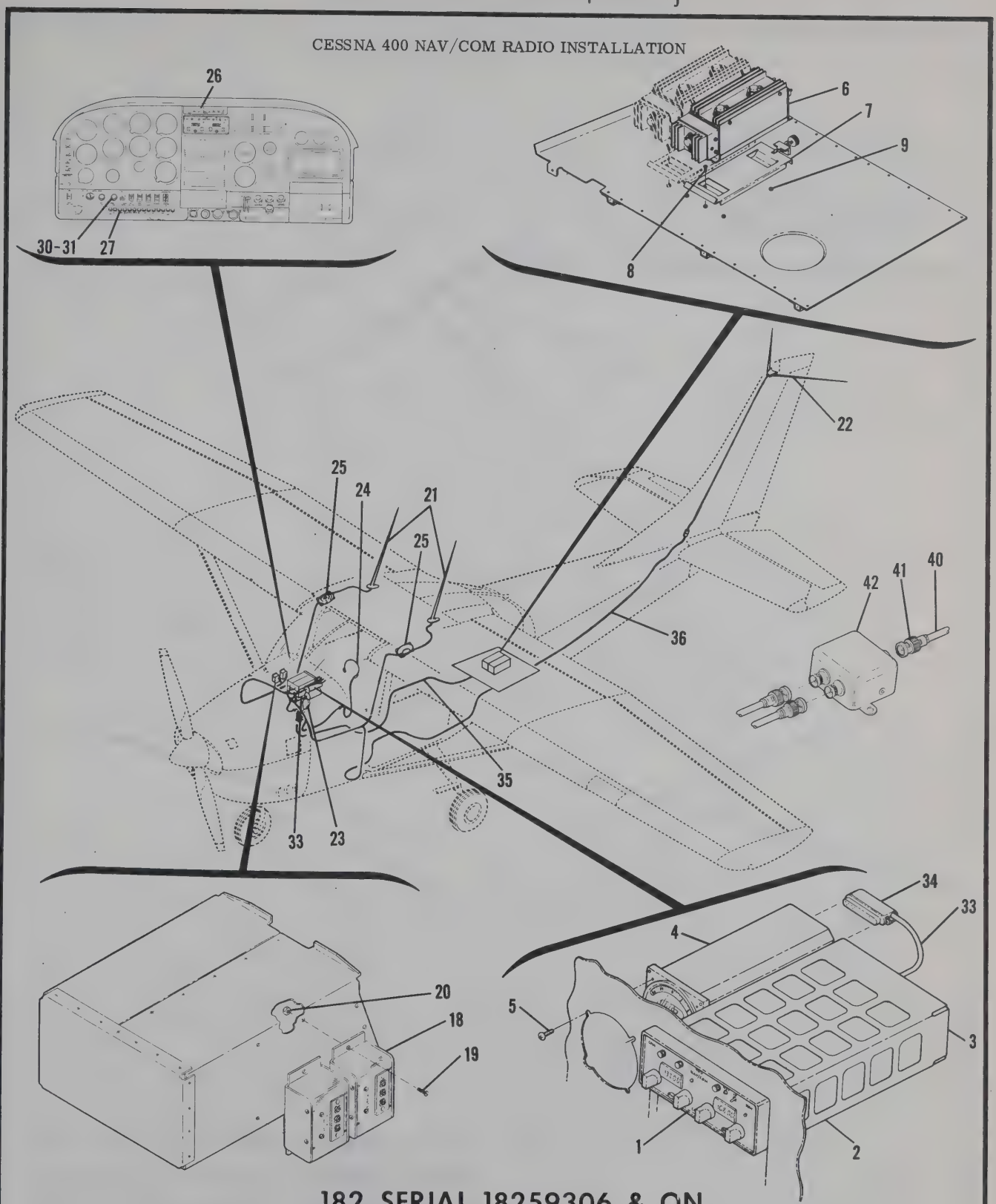

Figure 1-10. Cessna 400 Nav/Com (Type RT-522A) Radio Installation (Sheet 2 of 6)

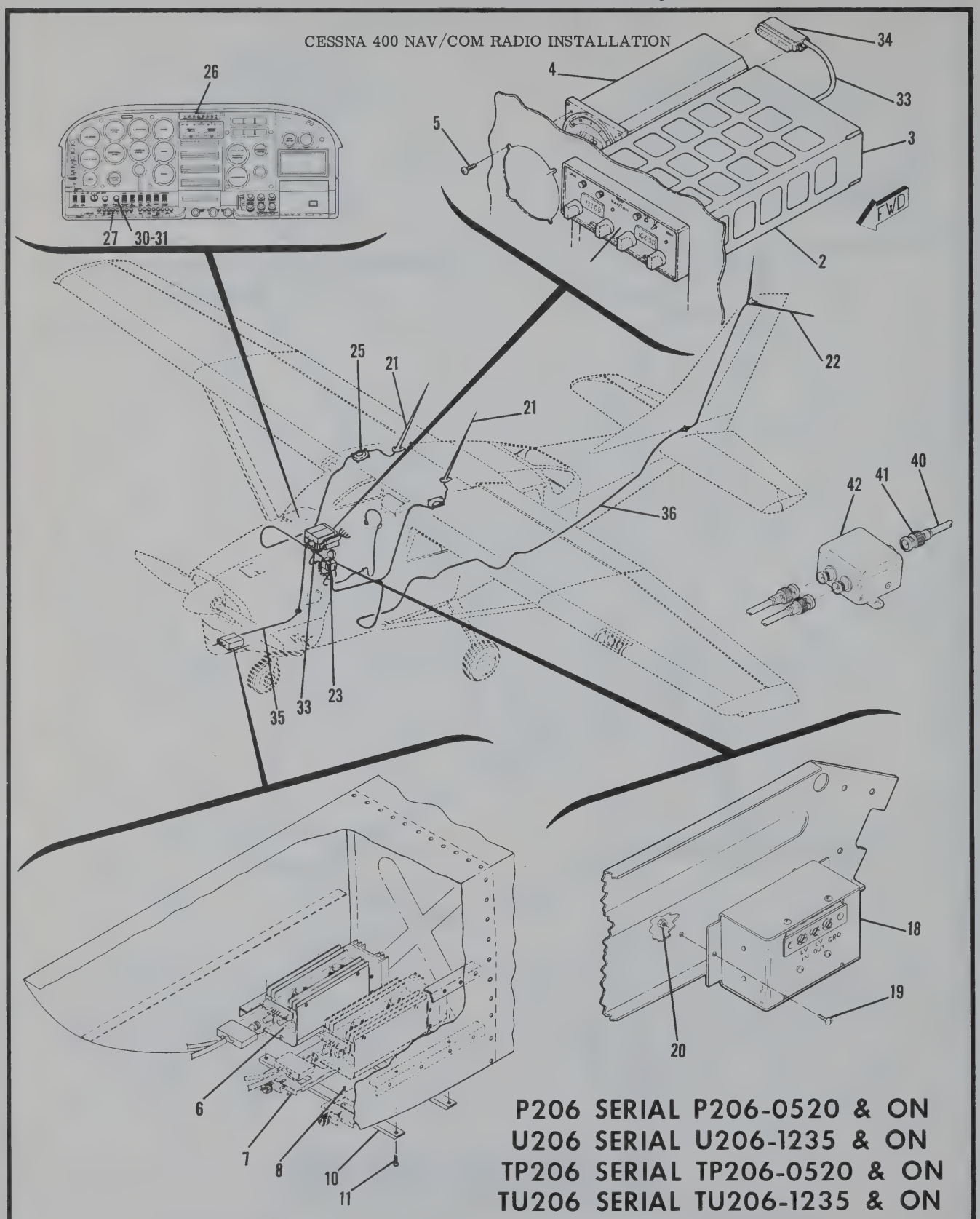

Figure 1-10. Cessna 400 Nav/Com (Type RT-522A) Radio Installation (Sheet 3 of 6)

CESSNA 400 NAV/COM RADIO INSTALLATION

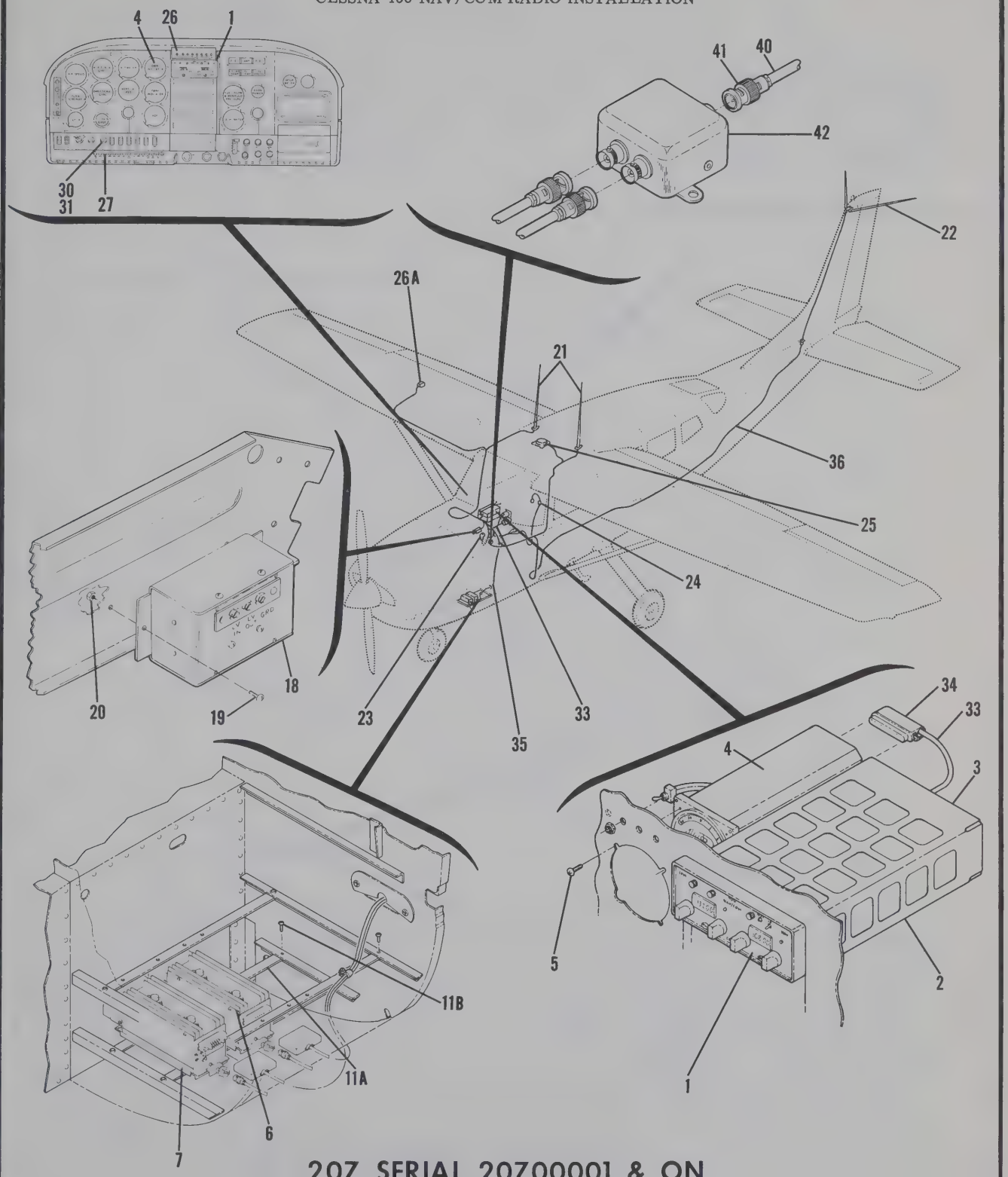

207 SERIAL 20700001 & ON
T207 SERIAL 20700001 & ON

Figure 1-10. Cessna 400 Nav/Com (Type RT-522A) Radio Installation (Sheet 4 of 6)

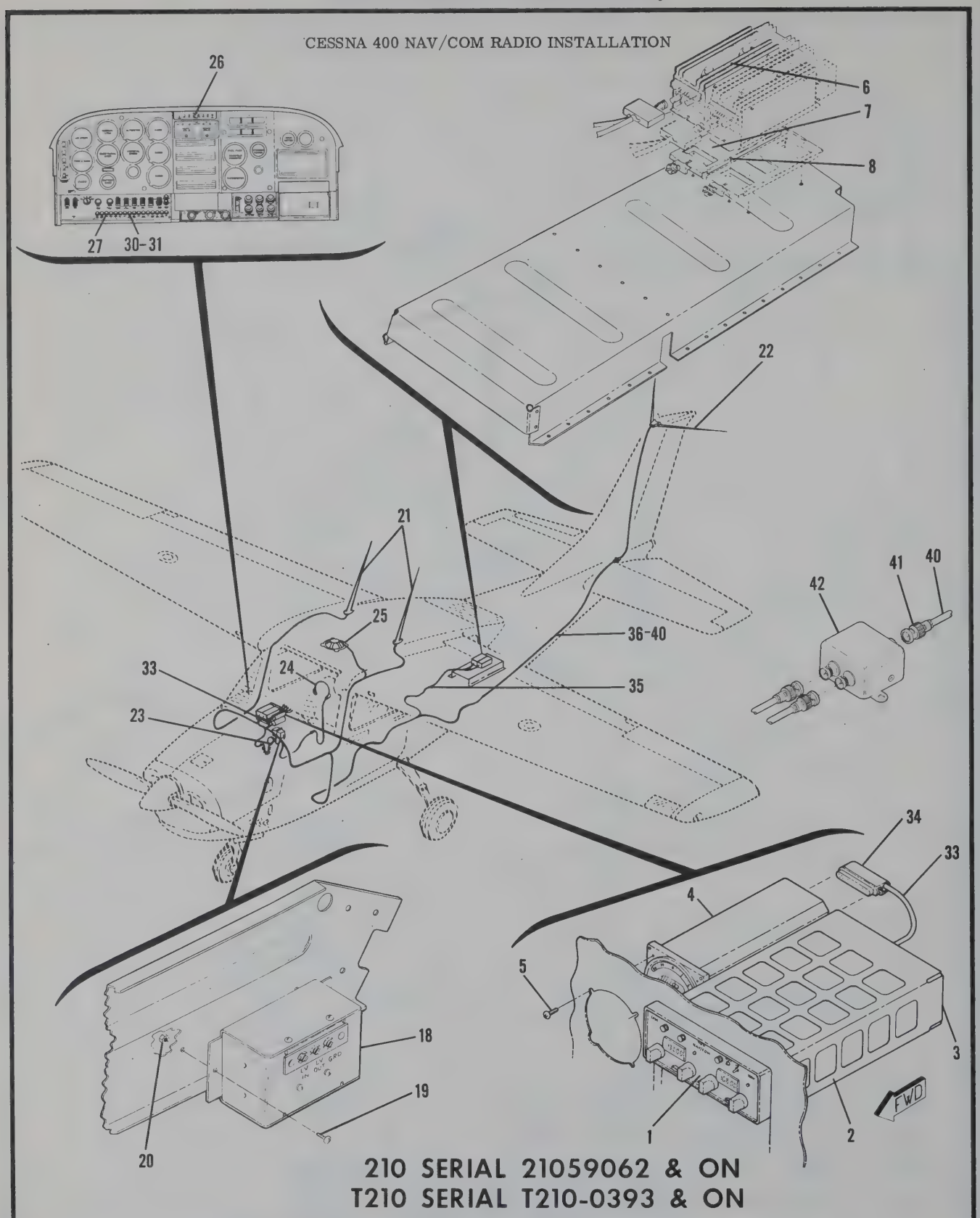

Figure 1-10. Cessna 400 Nav/Com (Type RT-522A) Radio Installation (Sheet 5 of 6)

CESSNA 400 NAV/COM RADIO INSTALLATION

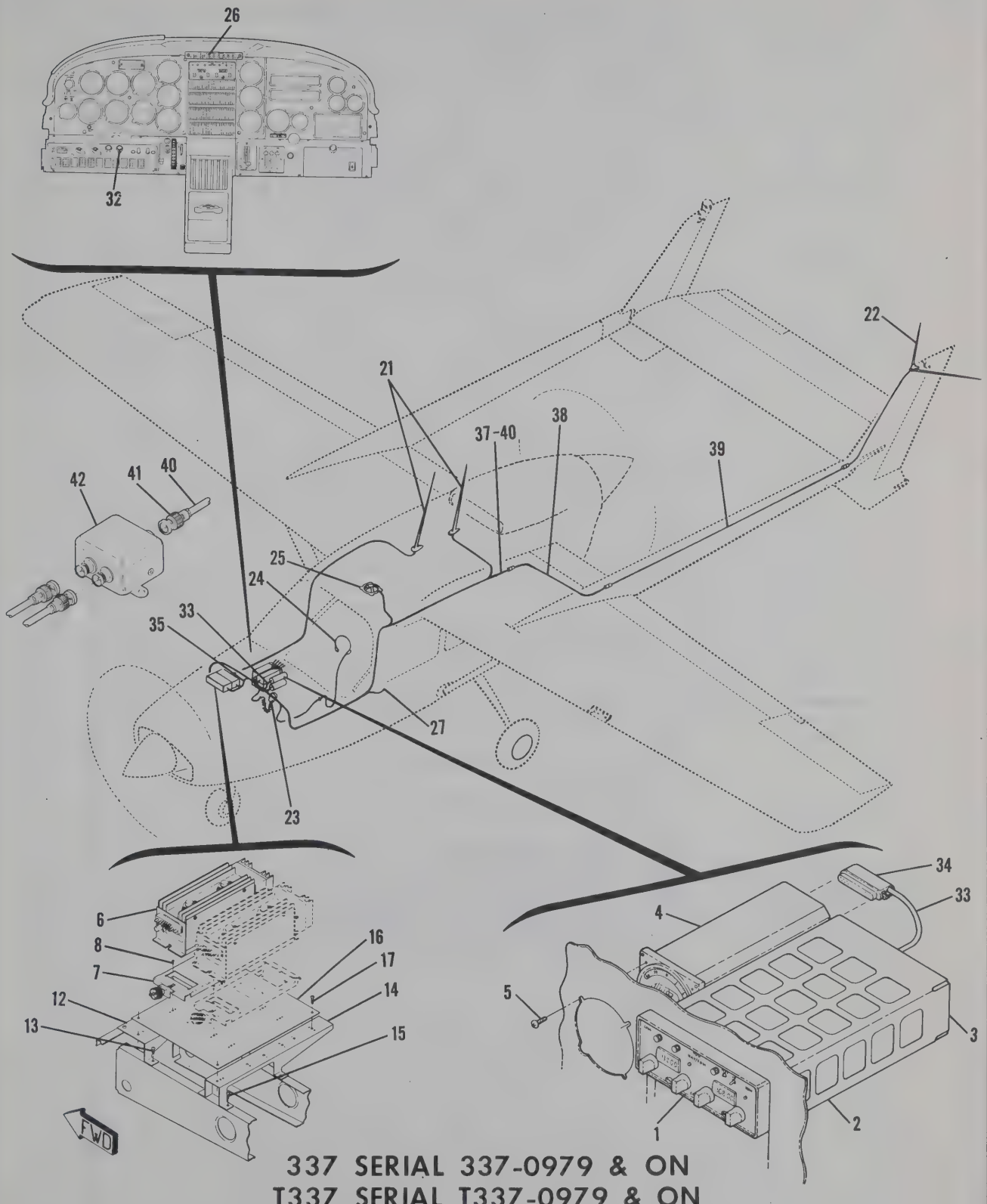

337 SERIAL 337-0979 & ON
T337 SERIAL T337-0979 & ON

Figure 1-10. Cessna 400 Nav/Com (Type RT-522A) Radio Installation (Sheet 6 of 6)

FIGURE AND INDEX NO.	PART NUMBER	DESCRIPTION 1 2 3 4 5 6 7	UNITS PER ASSY	USABLE ON CODE
1-10-		CESSNA 400 NAV/COM RADIO INSTALLATION - TYPE RT-522 ----------	NP	
		ALL MODELS EXCEPT 150, 172, 177 & 188		
- 1	33950-1100	RECEIVER - TRANSMITTER ----------	1	
- 2	37525-0071	MOUNTING KIT ARC ----------	1	
- 3	35213	REAR PLATE ARC ----------	2	
		ATTACHING PARTS		
	S1021Z6-6	SCREW ----------	4	
	NAS446-2-3	NUT ----------	4	
		---*---		
- 4	33970-0000	INDICATOR TYPE IN-522A THRU EARLY 1969 MODELS ----------	1	
		REPLACED BY 33970-0001 ON LATE 1969 & ON MODELS ARC		
	34290-0000	INDICATOR TYPE IN-543A THRU EARLY 1969 MODELS ----------	1	
		REPLACED BY 34290-0001 ON LATE 1969 & ON MODELS		
		REPLACES ITEM 4 WHEN GLIDE SLOPE IS INSTALLED ARC		
		ATTACHING PARTS		
- 5	AN515-6R10	SCREW ----------	3	
	NAS487-20	NUT ----------	3	
		---*---		
- 6	36600-0000	REMOTE UNIT TYPE RTA-532B ARC ----------	1	
- 7	35540-0000	MOUNTING - REMOTE UNIT TYPE M-532A ARC ----------	1	
		ATTACHING PARTS		
- 8	AN515-6R10	SCREW ----------	4	
- 9	S1648-06-75	RIVNUT 182 & 210 SERIES ONLY ----------	4	
	NAS679A06	NUT 206 SERIES ONLY ----------	4	
		---*---		
- 10	127C627-91	ATTACH ANGLE 206 SERIES ONLY ----------	2	
		ATTACHING PARTS		
- 11	AN520-10R6	SCREW ----------	4	
		---*---		
-11A	1213904-1	ATTACH ANGLE ASSY 207 SERIES ONLY ----------	2	
		ATTACHING PARTS		
-11B	AN520-10R6	SCREW ----------	4	
		---*---		
- 12	1513629-1	SUPPORT ASSY 337 SERIES ONLY ----------	1	
		ATTACHING PARTS		
- 13	AN515-8R8	SCREW ----------	5	
	NAS679A08	NUT ----------	5	
		---*---		
- 14	1513635-1	SUPPORT ASSY 337 SERIES ONLY ----------	1	
		ATTACHING PARTS		
- 15	AN515-8R8	SCREW ----------	4	
	NAS679A08	NUT ----------	4	
		---*---		
- 16	1513313-3	PLATE ASSY 337 SERIES ONLY ----------	1	
		ATTACHING PARTS		
- 17	AN515-8R8	SCREW ----------	4	
		---*---		
- 18	37243	FILTER ASSY 12 VOLT AIRCRAFT ONLY ----------	1	
		ATTACHING PARTS		
- 19	AN515-6R8	SCREW ----------	2	
- 20	NAS679A06	NUT ----------	2	
		---*---		
- 21	SEE FIG 3-1	VHF ANTENNA INSTALLATION ----------	1	
- 22	SEE FIG 3-2	OMNI ANTENNA INSTALLATION ----------	1	
- 23	SEE FIG 4-3	MICROPHONE INSTALLAION ----------	1	
- 24	SEE FIG 4-4	HEADPHONE INSTALLATION ----------	1	
- 25	SEE FIG 4-2	SPEAKER INSTALLATION ----------	1	
- 26	SEE FIG 4-1	TRANSMITTER SELECTOR SWITCH INSTALLATION ----------	1	
-26A	SEE FIG 5-2	RADIO NOISE FILTER INSTALLATION ----------	1	
- 27	S1360-5	CIRCUIT BREAKER ----------	1	

CONTINUED ON NEXT PAGE

FIGURE AND INDEX NO.	PART NUMBER	DESCRIPTION 1 2 3 4 5 6 7	UNITS PER ASSY	USABLE ON CODE
1-10- 28	0413126-5	RHEOSTAT 180 & 185 ONLY	1	
- 29	S1390-5	KNOB - RHEOSTAT 180 & 185 ONLY	1	
- 30	S1880-3	RHEOSTAT 182, 206 SERIES, 207 SERIES & 210 SERIES ONLY	1	
- 31	S1753-7	KNOB - RHEOSTAT 182, 206 SERIES, 207 SERIES & 210 SERIES ONLY	1	
- 32	1570164-1	SWITCH ASSY - LIGHT DIMMING 337 SERIES ONLY	1	
	9341GL	RHEOSTAT CPH	1	
	S1832-1	SWITCH	1	
- 33		CABLE ASSY NAV SIDE OF TRANSCEIVER TO INDICATOR-CONVERTER AND OMNI CABLE	NP	
	RG-58A/U	COAXIAL CABLE BULK ITEM	AR	
	35693-0004	CONNECTOR CONNECTS TO NAV SIDE OF RECEIVER-TRANSMITTER PART OF 37525-0071 MOUNTING KIT ARC	1	
	35032-0012	CONTACT ATTACHES TO NAV SIDE OF RECEIVER-TRANSMITTER FOR OMNI CONNECTION ARC	1	
- 34	36364-0000	CONNECTOR KIT ATTACHES TO INDICATOR ARC	1	
	UG-88C/U	CONNECTOR ATTACHES TO BALUN STUB ON SINGLE INSTL OR OMNI ANT COUPLER ON DUAL INSTALLATIONS	1	
- 35		CABLE ASSY COM SIDE OF TRANSCEIVER TO ACCESSORY UNIT	1	
	RG-58A/U	COAXIAL CABLE BULK ITEM	AR	
	35693-0003	CONNECTOR ATTACHES TO RECEIVER-TRANSMITTER ARC	1	
	35032-0012	CONTACT ATTACHES TO RECEIVER-TRANSMITTER ARC	1	
	36363-0000	CONNECTOR ATTACHES TO REMOTE UNIT ARC	1	
	S1838-2	HOUSING CONNECTS TO PIN 2 ON AUDIO JUNCTION BOX	1	
- 36		CABLE ASSY - RECEIVER-TRANSMITTER TO BALUN STUB ALL MODELS EXCEPT 337 SERIES	NP	
	RG-58A/U	COAXIAL CABLE BULK ITEM	AR	
	UG-89/U	CONNECTOR-JACK CONNECTS TO RECEIVER-TRANSMITTER	1	
	UG-88C/U	CONNECTOR-PLUG CONNECTS TO BALUN STUB	1	
- 37		CABLE ASSY RECEIVER-TRANSMITTER TO OMNI CABLE CONNECTION AT WING ROOT 337 SERIES ONLY	NP	
	RG-58A/U	COAXIAL CABLE BULK ITEM	AR	
	UG-89/U	CONNECTOR TRANSCEIVER END	1	
	UG-88C/U	PLUG-COAXIAL WING ROOT END	1	
- 38		CABLE ASSY WING ROOT CONNECTION TO BOOM CONNECTION SUPPLIED ON AIRCRAFT AS STANDARD EQUIPMENT 337 SERIES ONLY	NP	
	RG-58A/U	COAXIAL CABLE BULK ITEM	AR	
	UG-88C/U	PLUG-COAXIAL BOOM END	1	
	UG-89/U	RECEPTACLE-COAXIAL WING ROOT END	1	
- 39		CABLE ASSY BOOM CONNECTION TO BALUN STUB 337 SERIES ONLY	NP	
	RG-58A/U	COAXIAL CABLE BULK ITEM	1	
	UG-89/U	RECEPTACLE-COAXIAL	1	
	UG-88C/U	PLUG-COAXIAL BALUN STUB END	1	
		NOTE THE FOLLOWING PARTS ARE REQUIRED WHEN DUAL RADIOS ARE INSTALLED		
- 40		CABLE ASSY - RECEIVER-TRANSMITTER TO BALUN STUB REPLACES ITEMS 36 & 37 WHEN DUAL RADIOS ARE INSTALLED	NP	
	RG-58A/U	COAXIAL CABLE BULK ITEM	AR	
- 41	UG-88C/U	CONNECTOR-PLUG ATTACHED TO OMNI COUPLER AND BALUN STUB	2	
- 42	AV-547	COUPLER-OMNI LEAD ASC	1	

CESSNA GLIDE SLOPE INSTALLATION

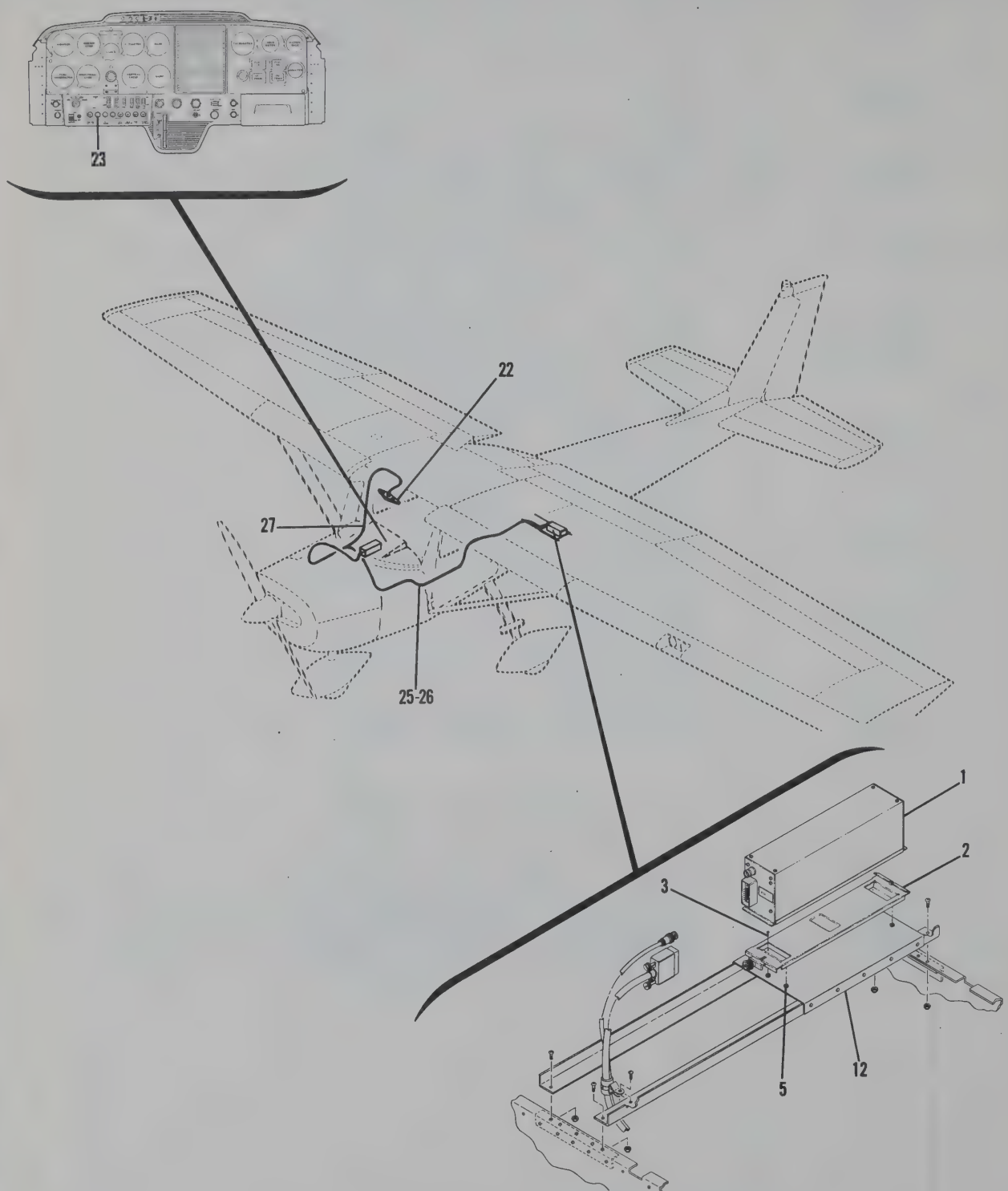

150 SERIAL 15069309 & ON
F150 SERIAL F150-0390 & ON

Figure 1-11. Cessna 400 Glide Slope (Type R-543B) Radio Installation (Sheet 1 of 9)

CESSNA GLIDE SLOPE INSTALLATION

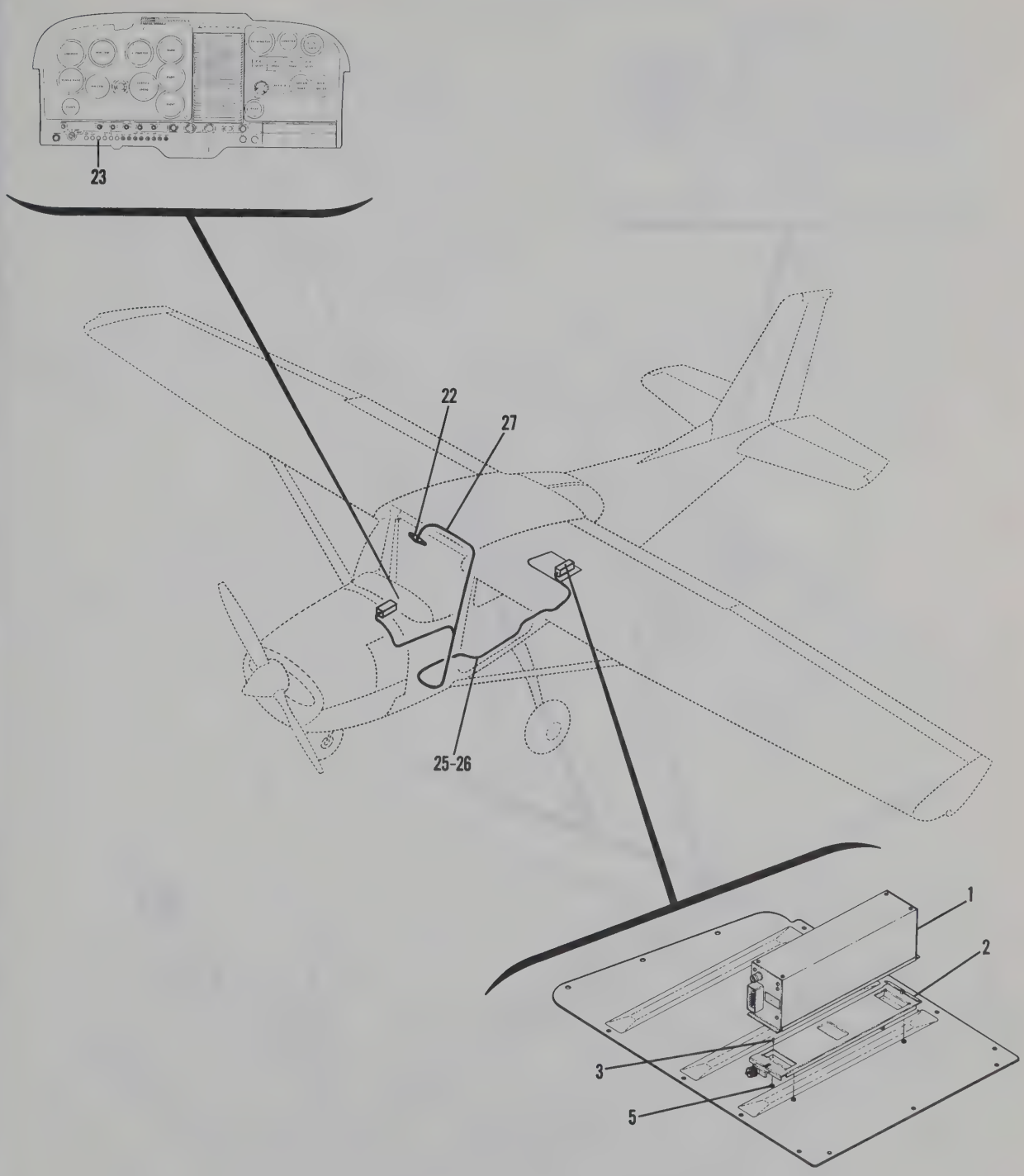

172 SERIAL 17257162 & ON
F172 SERIAL F172-0560 & ON
FR172 SERIAL FR172-0061 & ON

Figure 1-11. Cessna 400 Glide Slope (Type R-543B) Radio Installation (Sheet 2 of 9)

CESSNA GLIDE SLOPE INSTALLATION

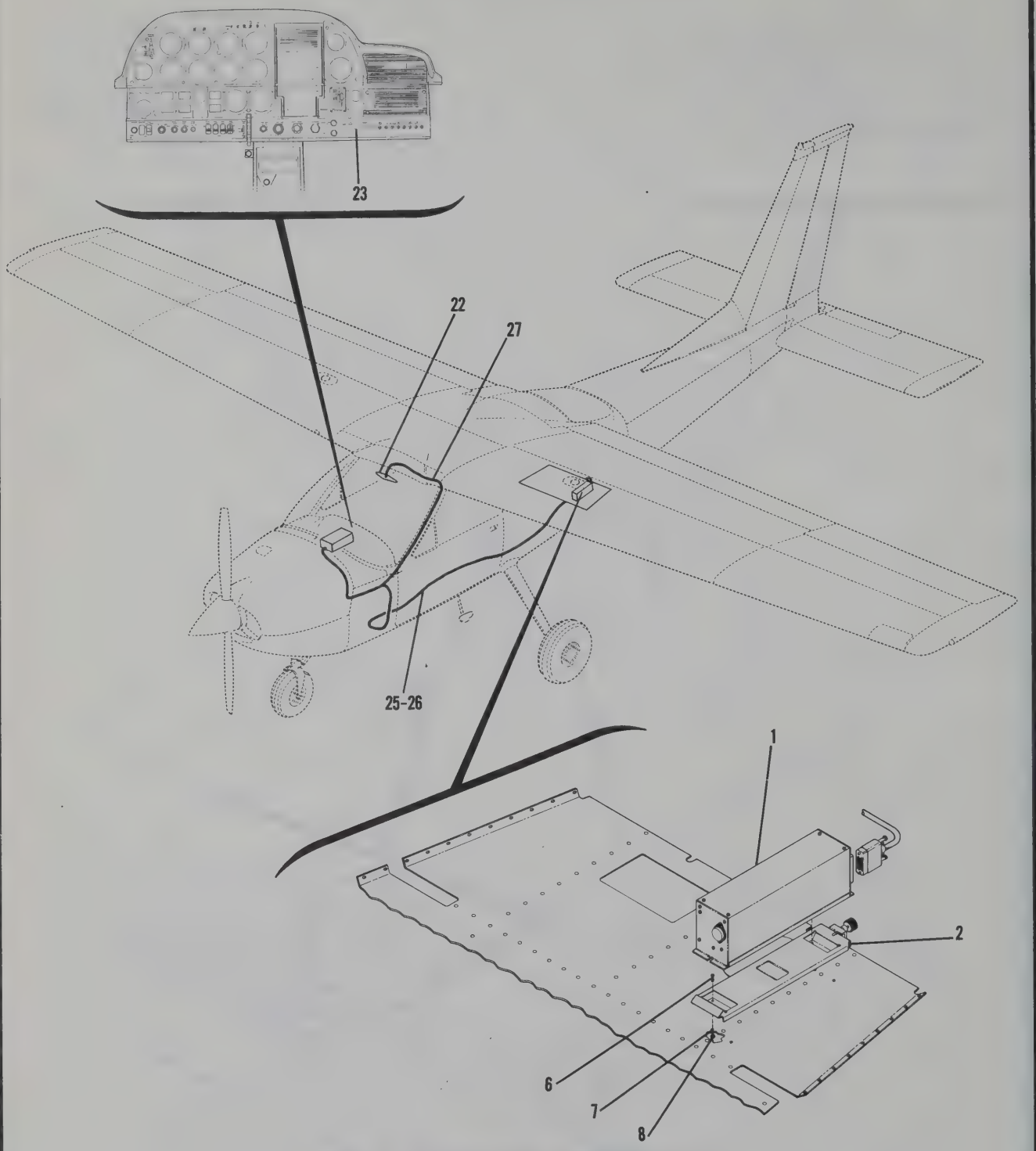

177 SERIAL 17701165 & ON

Figure 1-11. Cessna 400 Glide Slope (Type R-543B) Radio Installation (Sheet 3 of 9)

CESSNA GLIDE SLOPE INSTALLATION

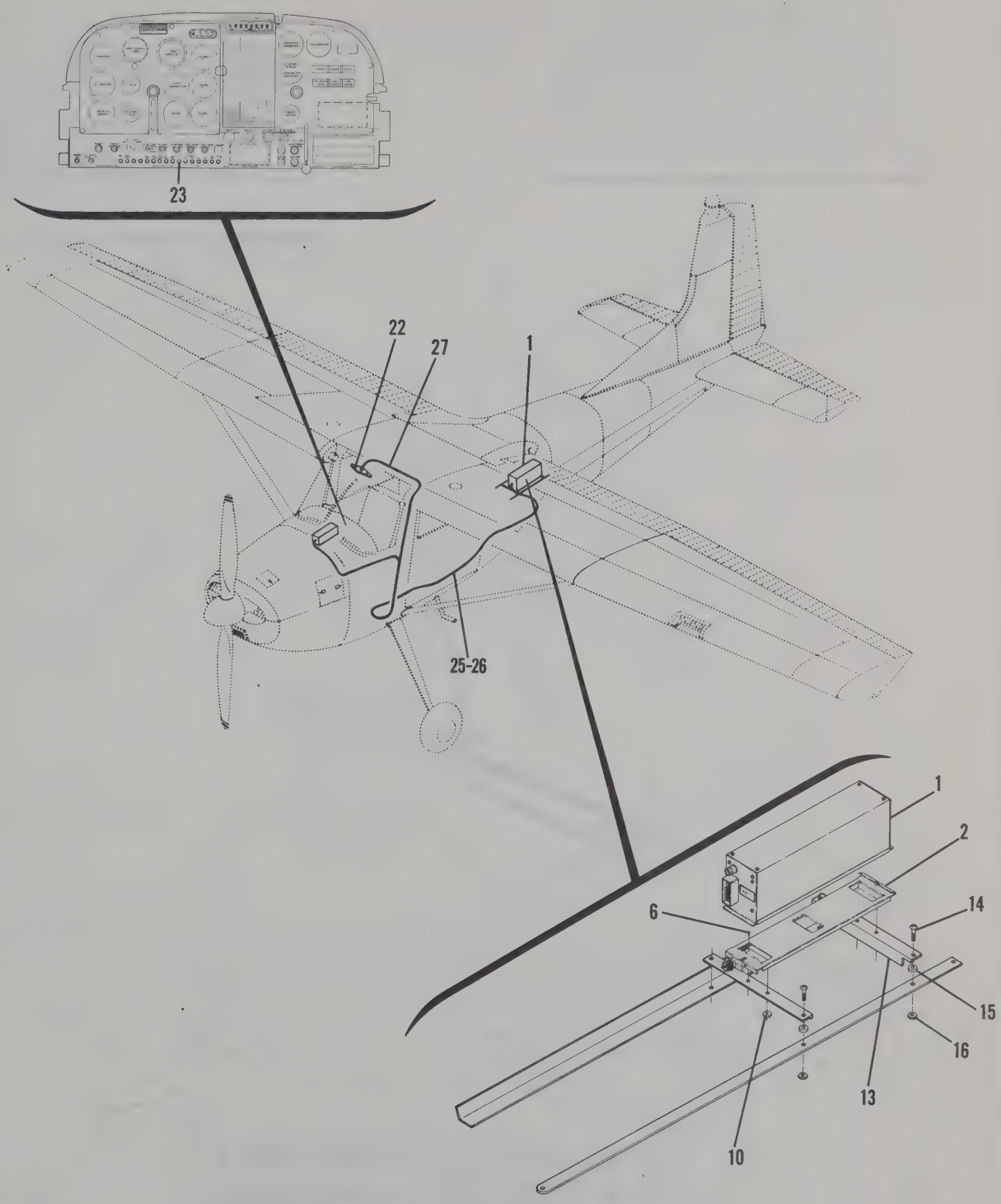

180 SERIAL 18051994 & ON
185 SERIAL 185-1448 & ON

Figure 1-11. Cessna 400 Glide Slope (Type R-543B) Radio Installation (Sheet 4 of 9)

CESSNA GLIDE SLOPE INSTALLATION

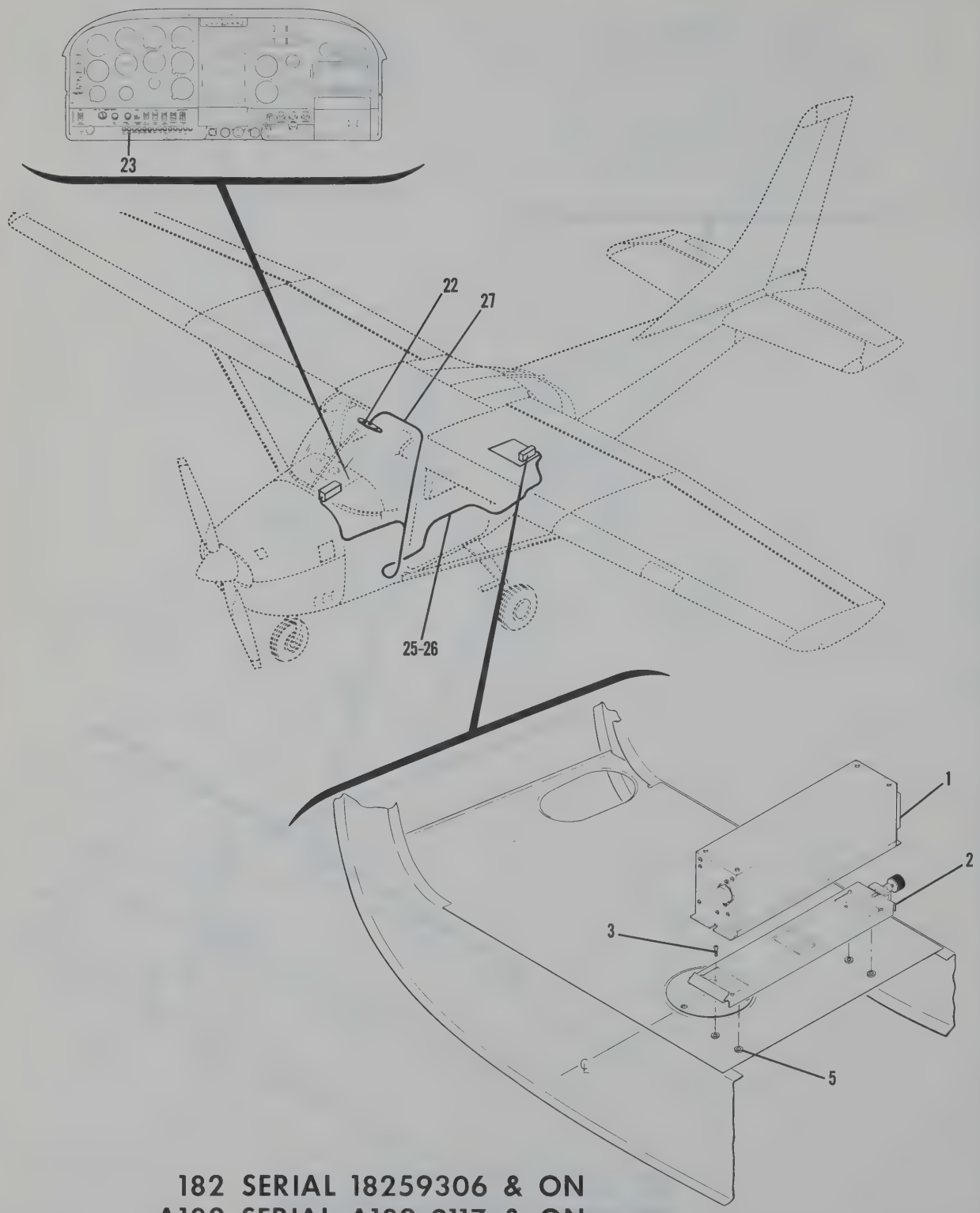

182 SERIAL 18259306 & ON
A182 SERIAL A182-0117 & ON

Figure 1-11. Cessna 400 Glide Slope (Type R-543B) Radio Installation (Sheet 5 of 9)

CESSNA GLIDE SLOPE INSTALLATION

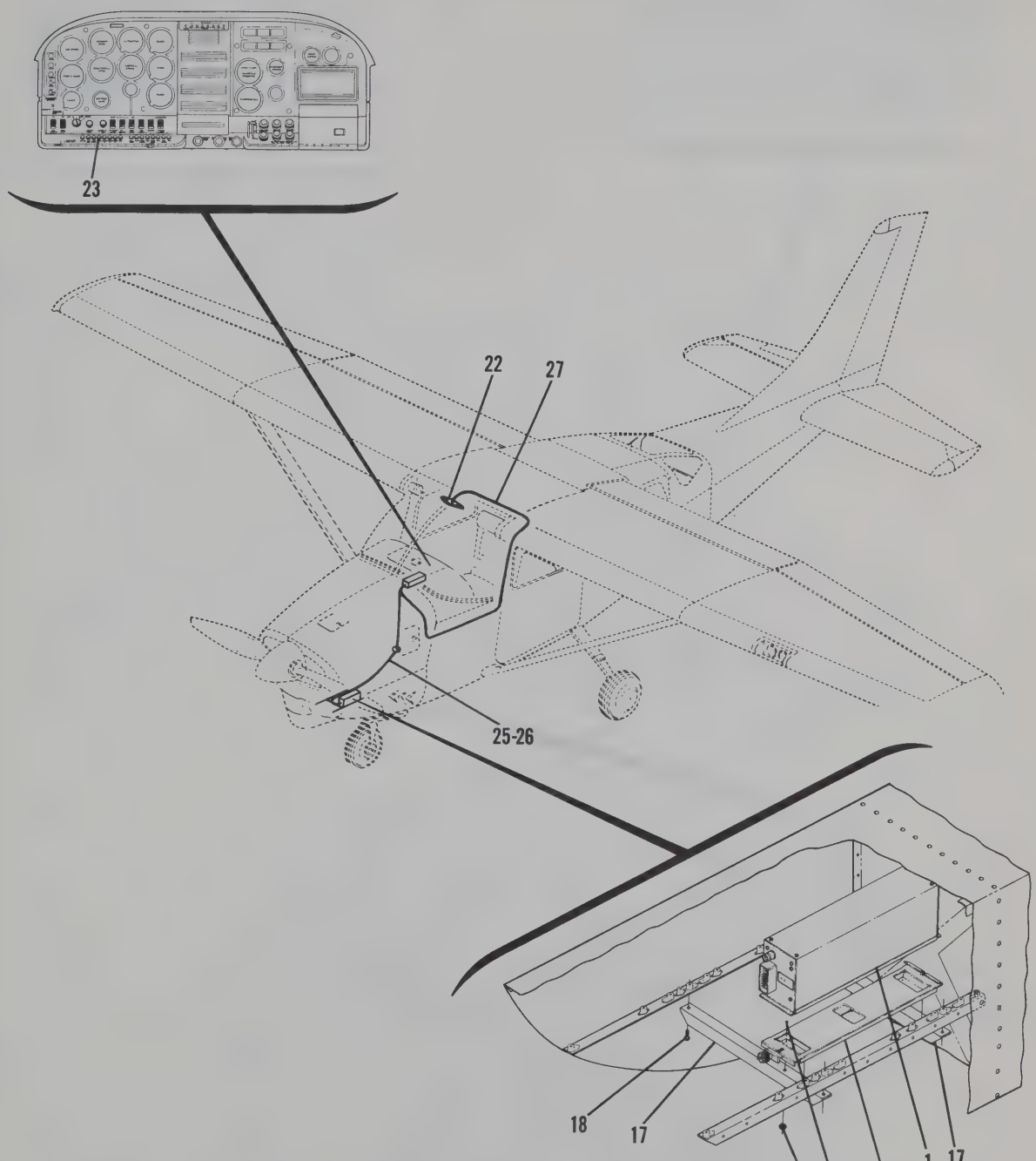

P206 SERIAL P206-0520 & ON
U206 SERIAL U206-1235 & ON
TP206 SERIAL TP206-0520 & ON
TU206 SERIAL TU206-1235 & ON

Figure 1-11. Cessna 400 Glide Slope (Type R-543B) Radio Installation (Sheet 6 of 9)

CESSNA GLIDE SLOPE INSTALLATION

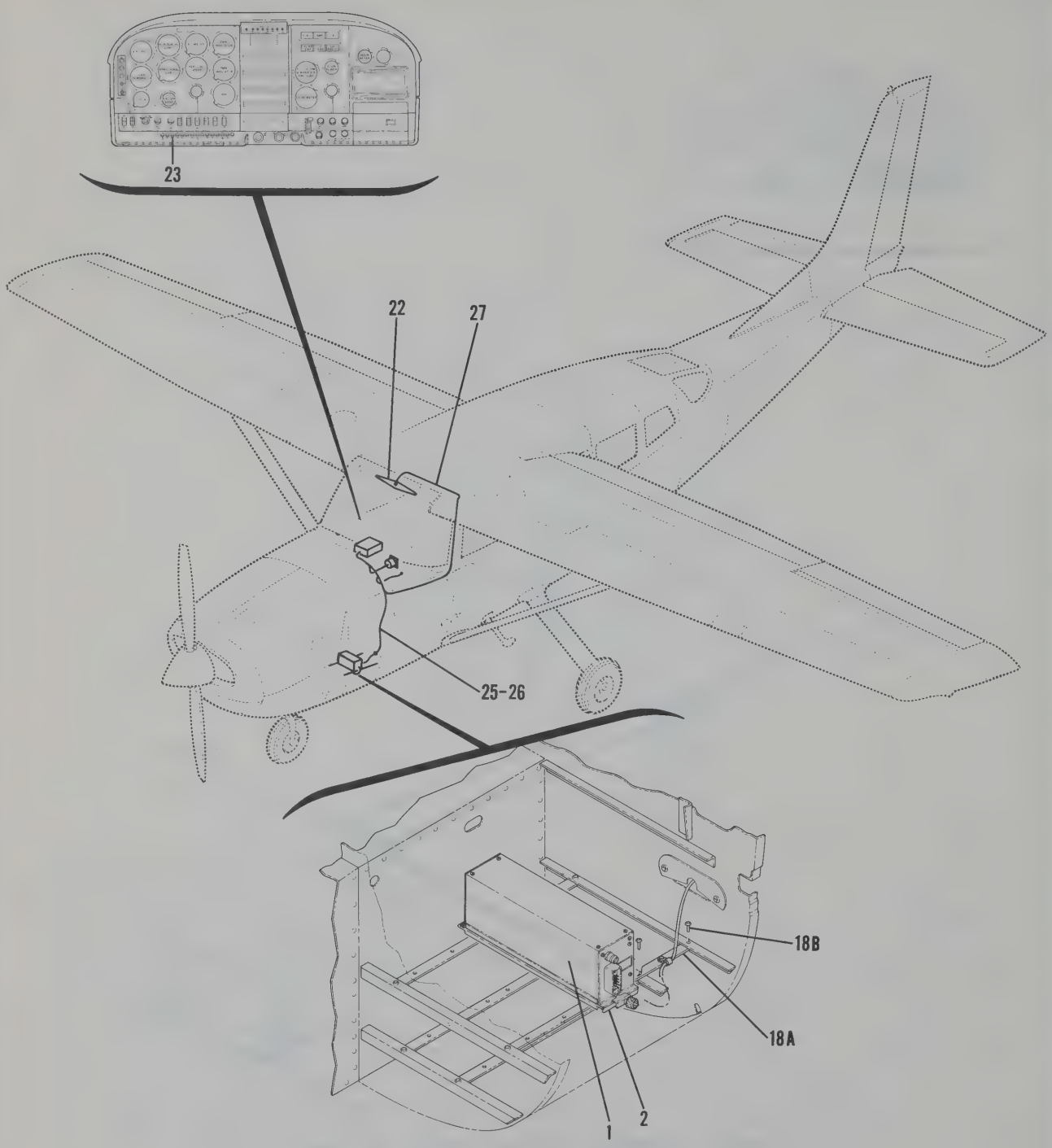

207 SERIAL 20700001 & ON
T207 SERIAL 20700001 & ON

Figure 1-11. Cessna 400 Glide slope (Type R-543B) Radio Installation (Sheet 7 of 9)

CESSNA GLIDE SLOPE INSTALLATION

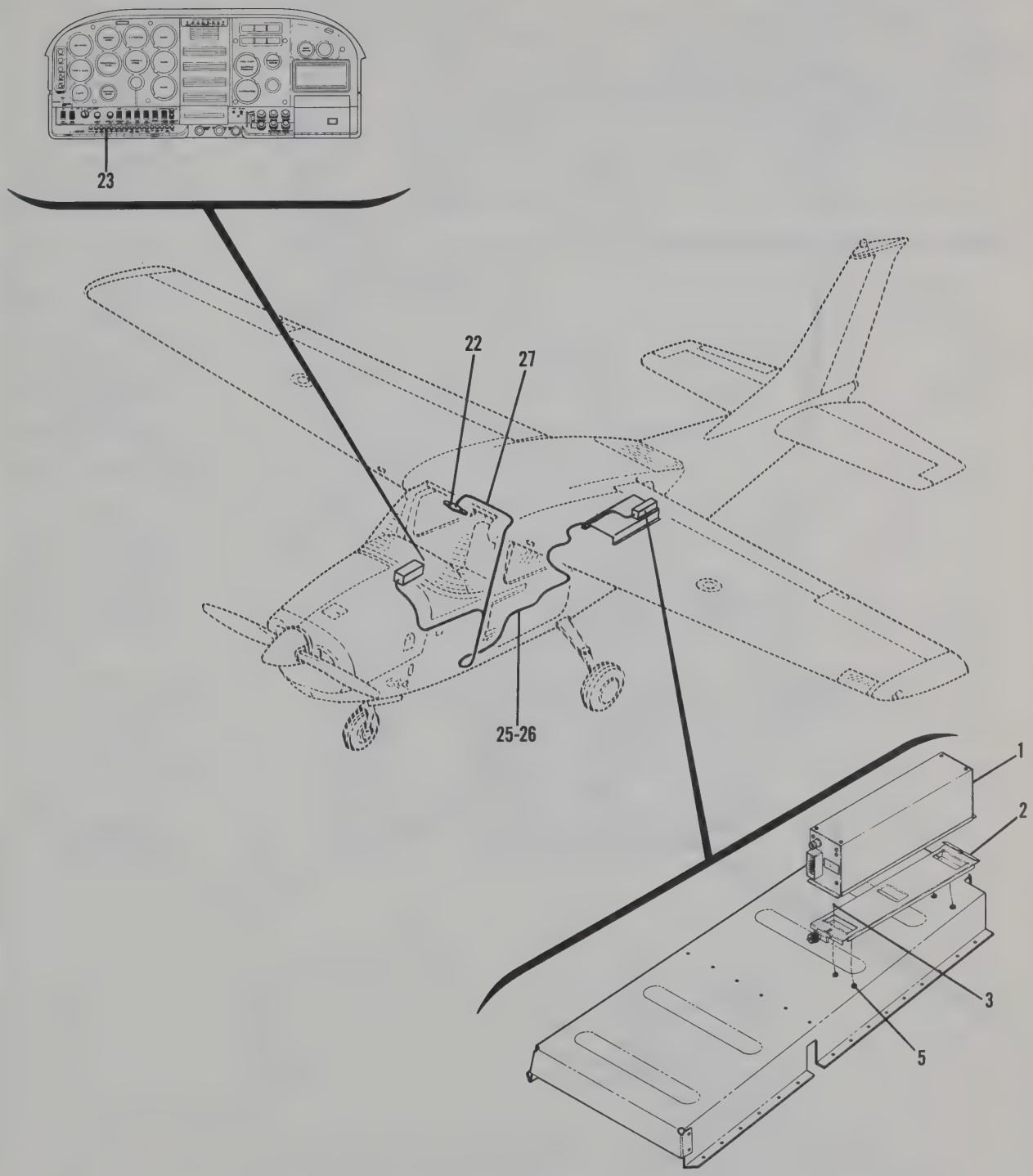

210 SERIAL 21059062 & ON
T210 SERIAL T210-0393 & ON

Figure 1-11. Cessna 400 Glide Slope (Type R-543B) Radio Installation (Sheet 8 of 9)

CESSNA GLIDE SLOPE INSTALLATION

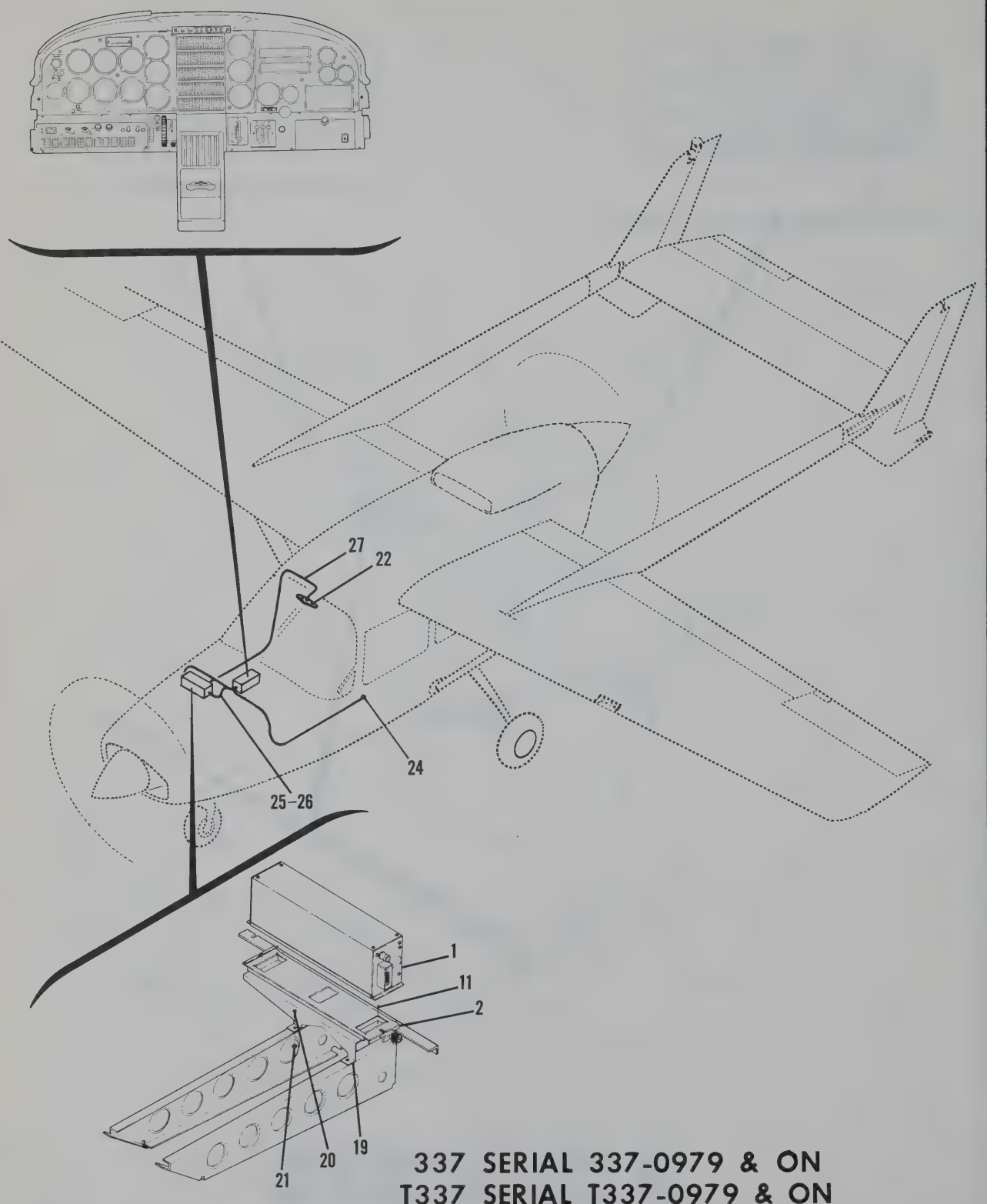

Figure 1-11. Cessna 400 Glide Slope (Type R-543B) Radio Installation (Sheet 9 of 9)

FIGURE AND INDEX NO.	PART NUMBER	DESCRIPTION 1 2 3 4 5 6 7	UNITS PER ASSY	USABLE ON CODE
1-11-		CESSNA 400 GLIDE SLOPE -TYPE R-543B- RADIO INSTALLATION -------	NP	
		ALL MODELS EXCEPT 188		
- 1	3644C-0000	GLIDE SLOPE RECEIVER TYPE R-543B ARC ----------	1	
- 2	3645D-0000	MOUNTING TYPE M-543B ARC ----------	1	
		ATTACHING PARTS		
- 3	AN515-6R16	SCREW 150, 172, 182 & 210 SERIES ONLY ----------	4	
- 4	AN936A6	WASHER 150, 172, 182 & 210 SERIES ONLY ----------	4	
- 5	S1648-06-75	RIVNUT 150, 172, 182 & 210 SERIES ONLY ----------	4	
- 6	AN515-8R6	SCREW 177, 180, 185 ONLY ----------	4	
- 7	AN936A8	WASHER 177 ONLY ----------	4	
- 8	NAS1329-08-120	NUT 177 ONLY ----------	4	
- 9	AN515-6R8	SCREW 206 SERIES & 207 SERIES ONLY ----------	4	
- 10	NAS679A06	NUT 180, 185 & 206 SERIES ONLY ----------	4	
- 11	AN515-6R8	SCREW 337 SERIES ONLY ----------	4	
		---*---		
- 12	0412013-1	BRACKET 150 ONLY ----------	1	
- 13	C770713-1	ANGLE 180 & 185 ONLY ----------	2	
		ATTACHING PARTS		
- 14	AN515-8R10	SCREW ----------	4	
- 15	S355	SPACER ----------	4	
- 16	NAS679A08	NUT ----------	4	
		---*---		
- 17	127C627-57	ATTACH ANGLE 206 SERIES ONLY ----------	2	
		ATTACHING PARTS		
- 18	AN520-10R6	SCREW ----------	4	
		---*---		
-18A	1213904-2	ATTACH ANGLE ----------	2	
		ATTACHING PARTS		
-18B	AN520-10R6	SCREW ----------	2	
		---*---		
- 19	1513722-1	SUPPORT ASSY 337 SERIES ONLY ----------	1	
		ATTACHING PARTS		
- 20	AN515-8R8	SCREW ----------	5	
- 21	NAS679A08	NUT ----------	5	
		---*---		
- 22	SEE FIG 3-3	GLIDE SLOPE ANTENNA INSTALLATION ----------	1	
- 23	S1360-5	CIRCUIT BREAKER ALL MODELS EXCEPT 337 SERIES ----------	1	
- 24	S1360-2	CIRCUIT BREAKER 337 SERIES ONLY ----------	1	
- 25		CABLE ASSY GLIDE SLOPE RCVR TO 300, SERIES TYPE 540A ----	NP	
		RCVR-XMTR PIG TAIL		
	36194-0001	CONNECTOR SUPPLIED WITH RCVR-XMTR CONNECTS --------	1	
		TO GLIDE SLOPE RECEIVER ARC		
	MRE14PG7HVL	CONNECTOR CONNECTS TO RCVR-XMTR PIG TAIL WIQ ------	1	
- 26		CABLE ASSY GLIDE SLOPE RCVR TO 400 SERIES TYPE 522 ------	NP	
		RCVR/XMTR SUPPLIED WITH 400 NAV/COM		
	35548-0225	CONNECTOR CONNECTS TO NAV SIDE OF 400 NAV/COM ARC -	1	
	36194-0001	CONNECTOR SUPPLIED WITH GLIDE SLOPE RCVR CONNECTS -	1	
		TO GLIDE SLOPE RCVR ARC		
- 27		CABLE ASSY GLIDE SLOPE RECEIVER TO ANTENNA ----------	NP	
	RG-58A/U	COAXIAL CABLE BULK ITEM ----------	AR	
	UG-88C/U	CONNECTOR CONNECTS TO GLIDE SLOPE RCVR ----------	1	
	S1367-1-4	TERMINAL CONNECTS TO ANTENNA ----------	2	

CESSNA 400 TRANSPONDER INSTALLATION

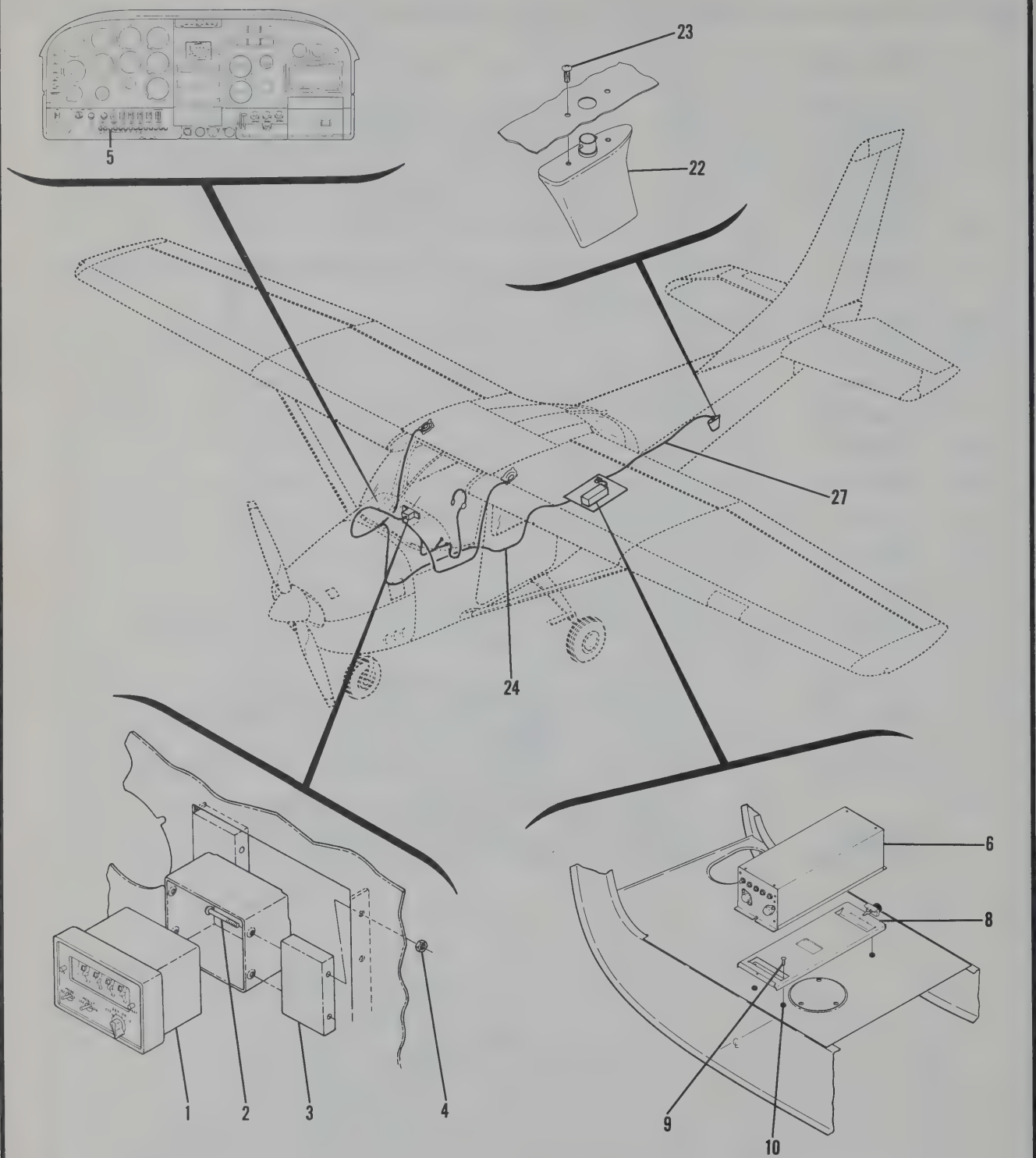

182 SERIAL 18259306 & ON
A182 SERIAL A182-0117 & ON

Figure 1-12. Cessna 400 Transponder (Type RT-506A) Installation (Sheet 1 of 5)

CESSNA 400 TRANSPONDER INSTALLATION

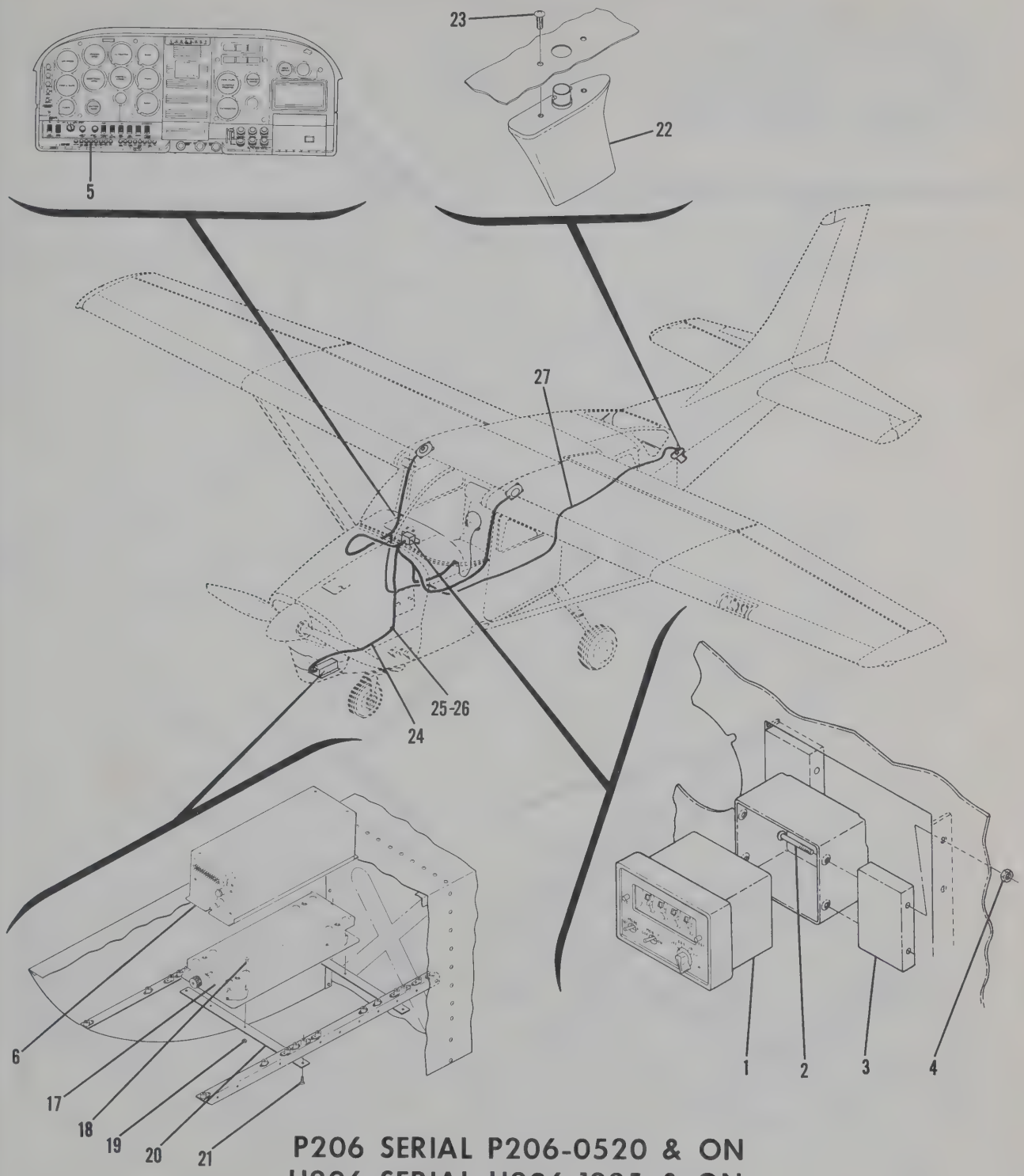

P206 SERIAL P206-0520 & ON
U206 SERIAL U206-1235 & ON
TP206 SERIAL TP206-0520 & ON
TU206 SERIAL TU206-1235 & ON

Figure 1-12. Cessna 400 Transponder (Type RT-506A) Installation (Sheet 2 of 5)

CESSNA 400 TRANSPONDER INSTALLATION

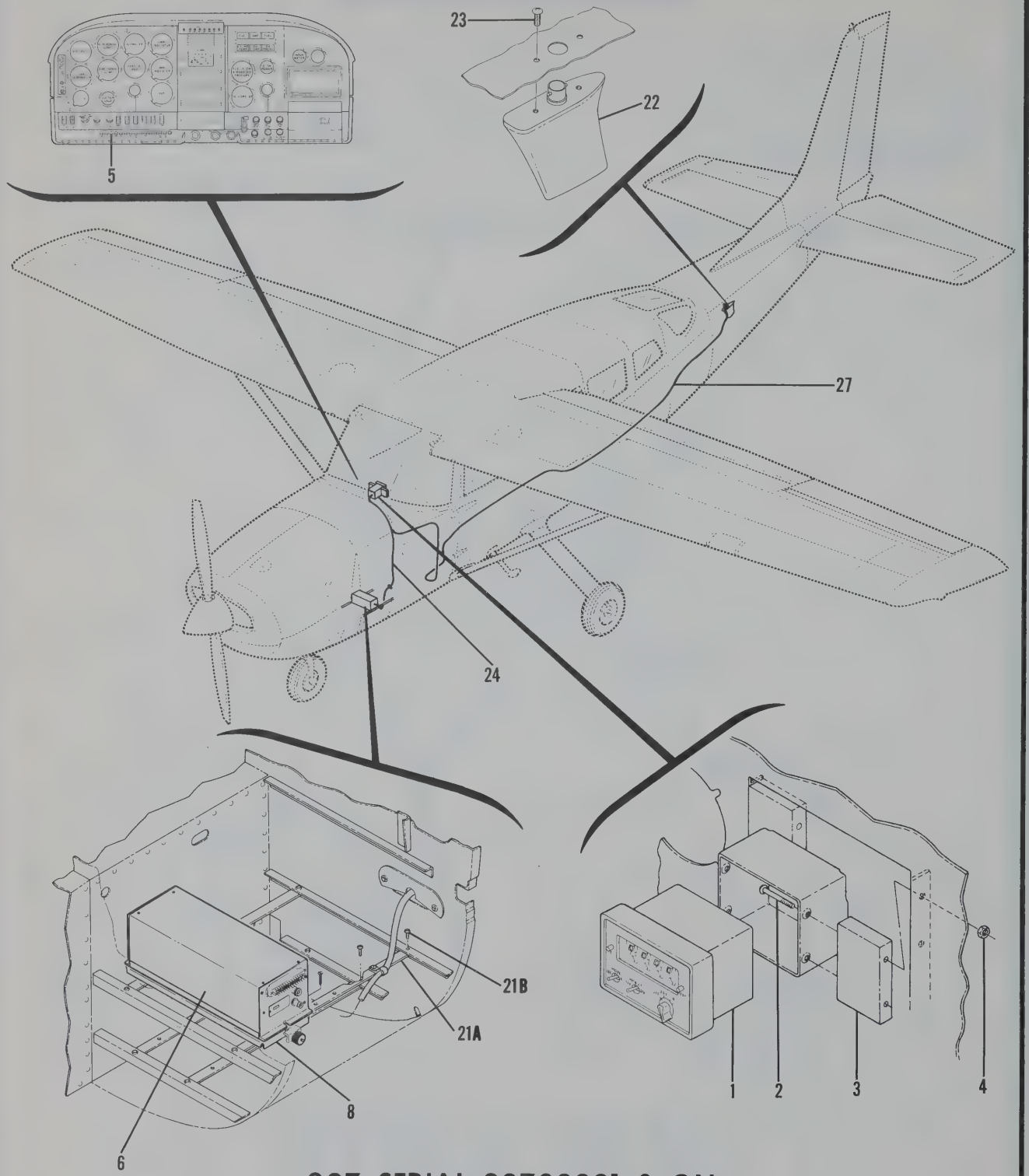

207 SERIAL 20700001 & ON
T207 SERIAL 20700001 & ON

Figure 1-12. Cessna 400 Transponder (Type RT-506A) Installation (Sheet 3 of 5)

CESSNA 400 TRANSPONDER INSTALLATION

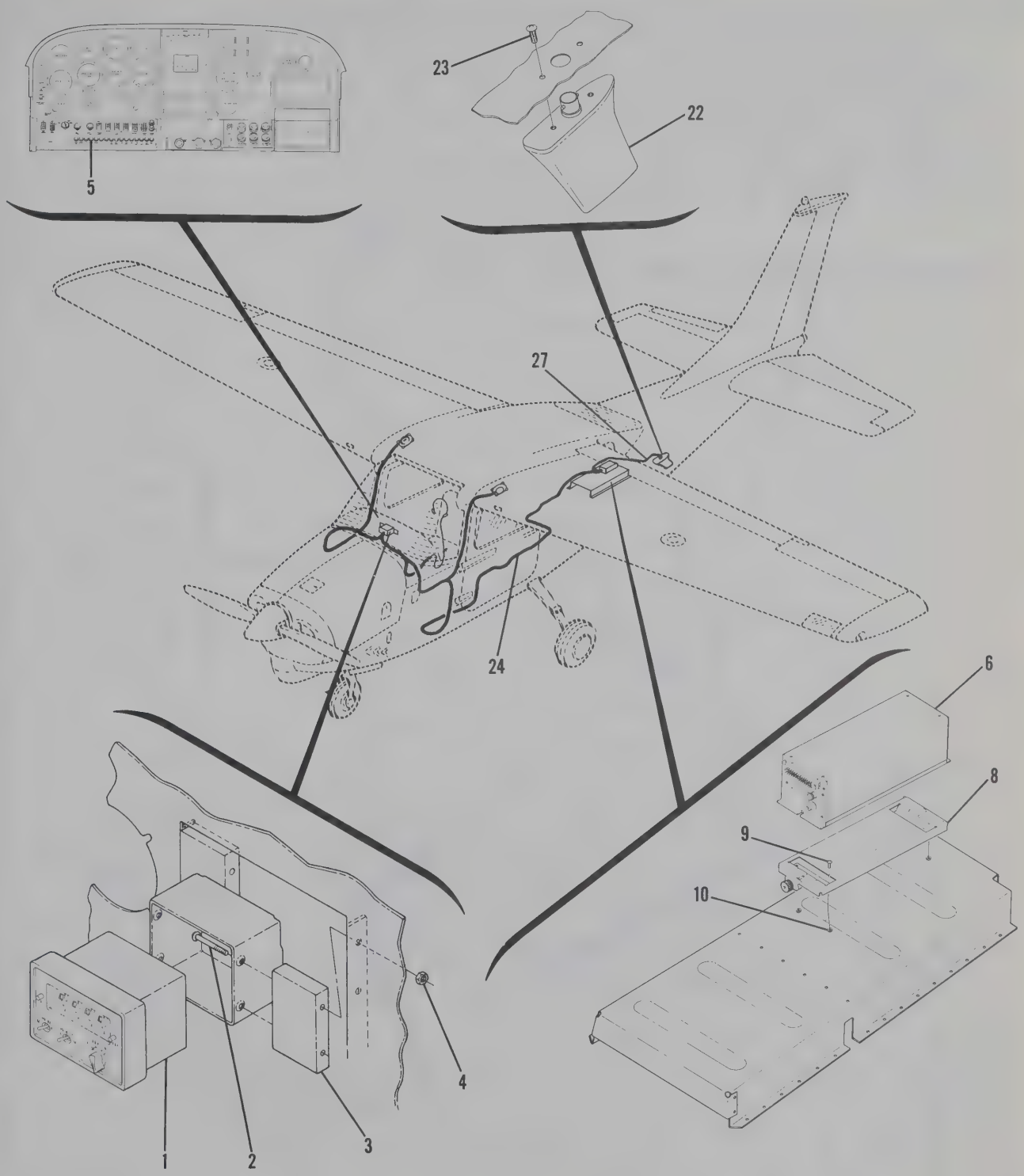

210 SERIAL 21059062 & ON
T210 SERIAL T210-0393 & ON

Figure 1-12. Cessna 400 Transponder (Type RT-506A) Installation (Sheet 4 of 5)

CESSNA 400 TRANSPONDER INSTALLATION

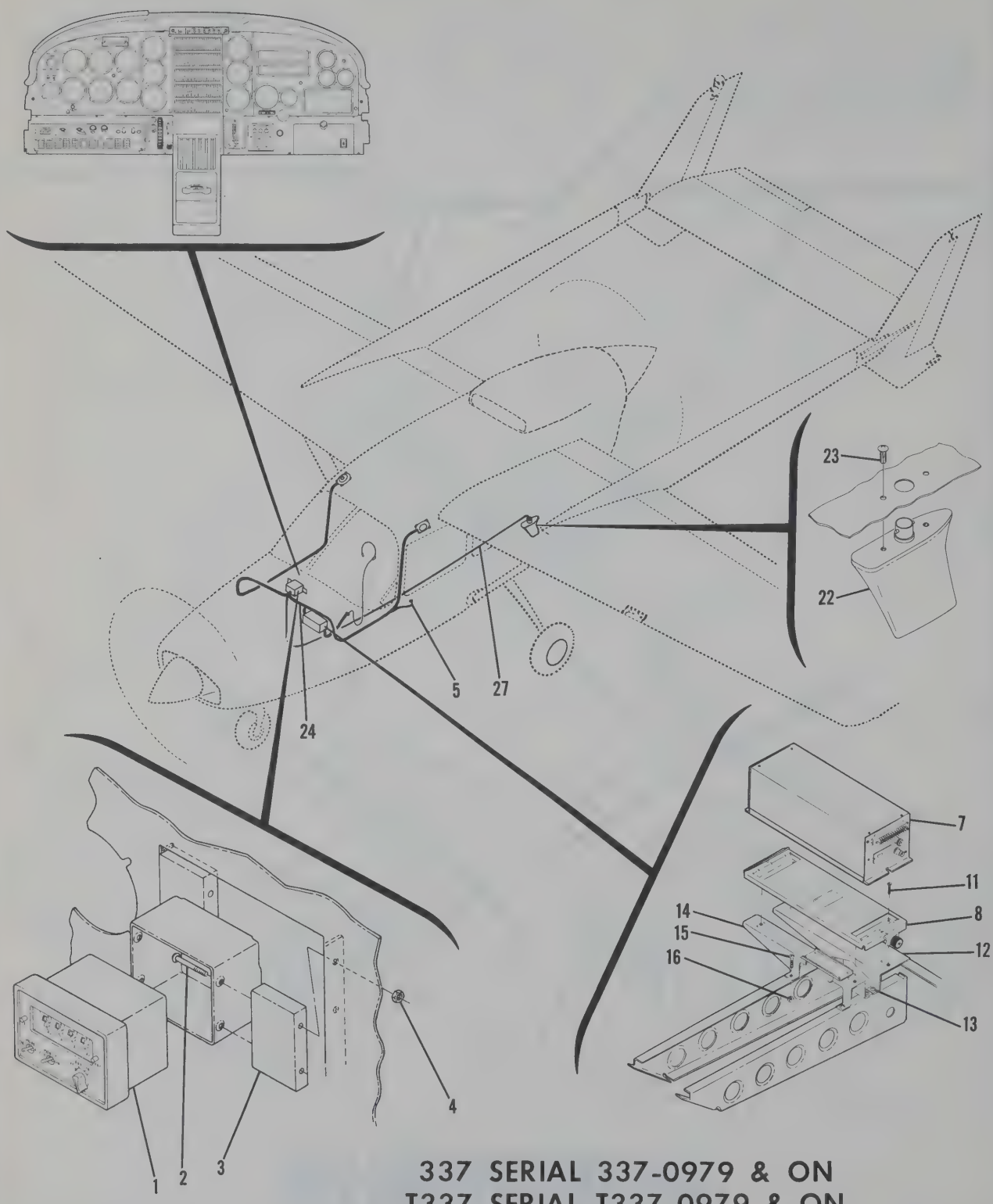

337 SERIAL 337-0979 & ON
T337 SERIAL T337-0979 & ON

Figure 1-12. Cessna 400 Transponder (Type RT-506A) Installation (Sheet 5 of 5)

FIGURE AND INDEX NO.	PART NUMBER	DESCRIPTION 1 2 3 4 5 6 7	UNITS PER ASSY	USABLE ON CODE
1-12-		CESSNA 400 TRANSPONDER -TYPE RT-506A- INSTALLATION 182, --- 206 SERIES, 207 SERIES, 210 SERIES AND 337 SERIES ONLY		
- 1	34960-0000	CONTROL UNIT TYPE C-506A ARC ----------	1	
		ATTACHING PARTS		
- 2	AN507-632R32	SCREW ----------	4	
- 3	127C056-1	SPACER ----------	2	
- 4	NAS679A06	NUT ----------	4	
		---*---		
- 5	S1360-5	CIRCUIT BREAKER ----------	1	
- 6	34950-0014	RECEIVER-TRANSMITTER TYPE RT-506A 14 VOLT ONLY ARC	1	
- 7	34950-0028	RECEIVER-TRANSMITTER TYPE RT-506A 28 VOLT ONLY ARC	1	
- 8	34980-0000	MOUNTING - PANEL NON-SHOCKMOUNTED ARC 182, 207 --	1	
		210 SERIES AND 337 SERIES ONLY		
		ATTACHING PARTS		
- 9	AN515-6R16	SCREW 182 & 210 SERIES ONLY ----------	4	
- 10	S1648-06-75	RIVNUT 182 & 210 SERIES ONLY ----------	4	
- 11	AN515-8R8	SCREW 337 SERIES ONLY ----------	4	
		---*---		
- 12	1513629-8	SUPPORT ASSY 337 SERIES ONLY ----------	1	
		ATTACHING PARTS		
- 13	AN515-8R16	SCREW ----------	5	
	NAS679A08	NUT ----------	5	
		---*---		
- 14	1513662-20	SUPPORT ASSY 337 SERIES ONLY ----------	1	
		ATTACHING PARTS		
- 15	AN515-8R16	SCREW ----------	4	
- 16	NAS679A08	NUT ----------	4	
		---*---		
- 17	36320-0000	MOUNTING - PANEL SHOCKMOUNTED 206 SERIES ONLY -------	1	
		ATTACHING PARTS		
- 18	AN515-6R8	SCREW ----------	4	
- 19	NAS679A06	NUT ----------	4	
		---*---		
- 20	127C627-57	ATTACH ANGLE 206 SERIES ONLY ----------	2	
		ATTACHING PARTS		
- 21	AN520-10R6	SCREW ----------	4	
		---*---		
-21A	1213904-2	ATTACH ANGLE ASSY 207 SERIES ONLY ----------	2	
		ATTACHING PARTS		
-21B	AN520-10R6	SCREW ----------	4	
		---*---		
- 22	34970-0000	ANTENNA TYPE A-105B ARC ----------	1	
		ATTACHING PARTS		
	AN960-8L	WASHER ----------	2	
- 23	AN515-8R6	SCREW ----------	2	
		---*---		
- 24		CABLE ASSY CONTROL UNIT TO RECEIVER-TRANSMITTER ----------	NP	
	RG-58A/U	COAXIAL CABLE BULK ITEM ----------	AR	
	UG-88C/U	CONNECTOR - CONNECTS TO RECEIVER-TRANSMITTER ----------	1	
- 25	1213614-11	COVER PLATE 206 SERIES ONLY ----------	2	
- 26	NAS557-10A	GROMMET 206 SERIES ONLY ----------	1	
	37449-0002	CONNECTOR KIT - CONNECTS TO RECEIVER-TRANSMITTER ARC --	1	
	37451-0002	CONNECTOR KIT - CONNECTS TO CONTROL HEAD ARC ----------	1	
	11337	CONNECTOR - CONNECTS TO RECEIVER-TRANSMITTER WHEN 300 DME - US USED ARC	1	
- 27		CABLE ASSY RECEIVER-TRANSMITTER TO TRANSPONDER ANTENNA --	NP	
	RG-58A/U	COAXIAL CABLE BULK ITEM ----------	AR	
	28776-0000	CONNECTOR - ATTACHES TO RECEIVER-TRANSMITTER END ARC --	1	
	UG-88C/U	CONNECTOR - ATTACHES TO ANTENNA END ----------	1	

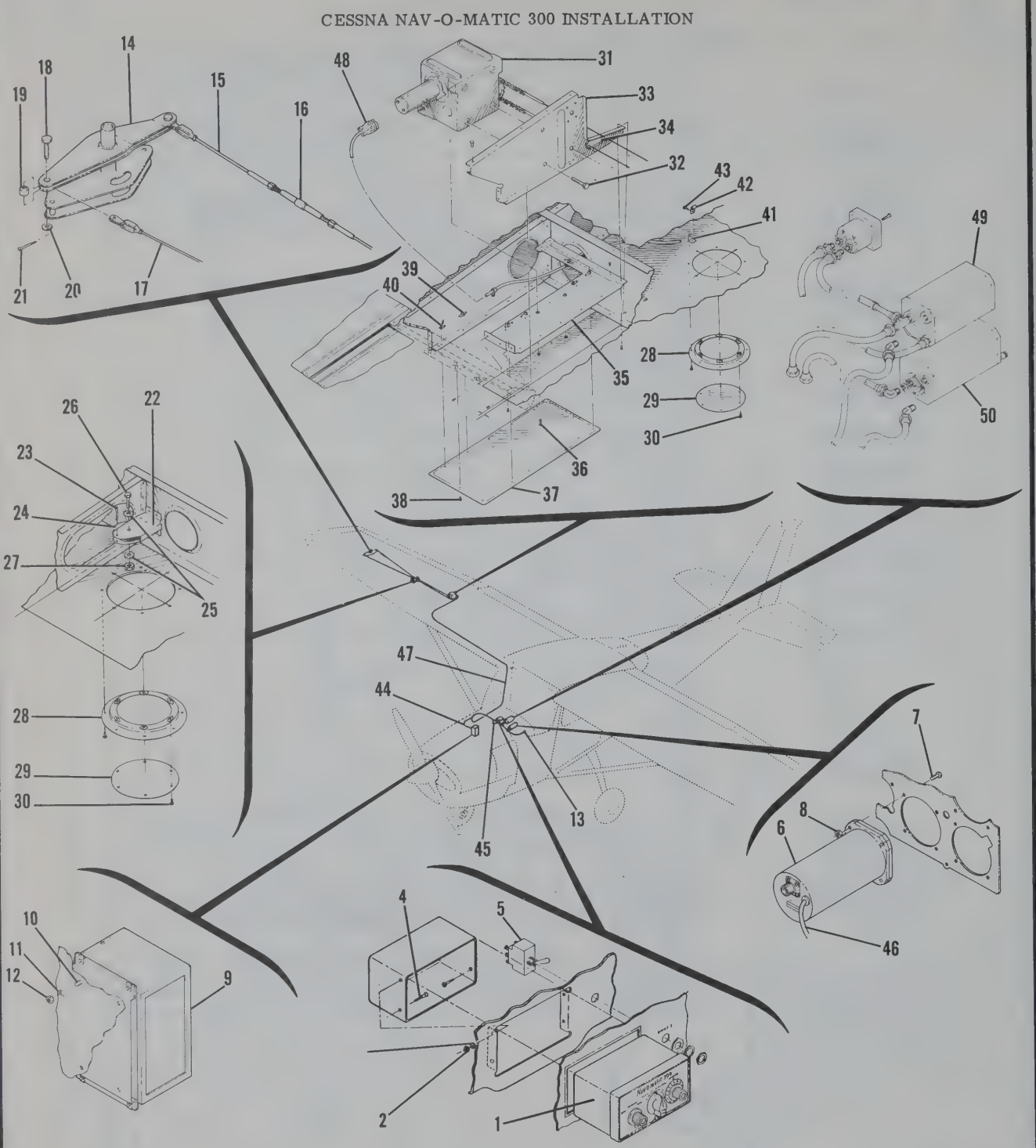

172 SERIAL 17257162 & ON
F172 SERIAL F172-0560 & ON

Figure 1-13. Cessna Nav-O-Matic 300 Installation - Model 172 Only

FIGURE AND INDEX NO.	PART NUMBER	DESCRIPTION 1 2 3 4 5 6 7	UNITS PER ASSY	USABLE ON CODE
1-13-		CESSNA NAV-O-MATIC 300 INSTALLATION 172 SERIES ONLY	NP	
- 1	35660-1014	CONTROLLER AMPLIFIER - 14 VOLT TYPE C-594B ARC	1	
		ATTACHING PARTS		
- 2	NAS679A06	NUT	4	
- 3	AN960-6	WASHER	4	
- 4	AN5C7-632R6	SCREW	4	
		---*---		
- 5	S392-3	SWITCH USED ONLY WHEN DUAL OMNIS ARE INSTALLED	1	
- 6	35C60-0014	TURN COORDINATOR ARC	1	
		ATTACHING PARTS		
- 7	AN515-6R14	SCREW	4	
- 8	NAS679A06	NUT	4	
		---*---		
- 9	289C0-0000	OMNI COUPLER - TYPE CA-512A ARC	1	
		ATTACHING PARTS		
- 10	AN515-8R6	SCREW	4	
- 11	AN960-6	WASHER	4	
- 12	NAS697A06	NUT	4	
		---*---		
- 13	S1360-10	CIRCUIT BREAKER	1	
- 14	12C0180-1	BELLCRANK ASSY	1	
- 15	12C0182-2	CABLE ASSY	1	
		ATTACHING PARTS		
	MS20392-2-9	PIN	1	
	12C0182-9	BUSHING	1	
	AN960-10L	WASHER - PLAIN	1	
	MS24665-134	PIN - COTTER	1	
- 16	AN155-16S	BARREL	1	
		---*---		
- 17	12C0182-1	CABLE & CHAIN ASSY	1	
		ATTACHING PARTS		
- 18	MS20392-2-9	PIN	1	
- 19	12C0182-9	BUSHING	1	
- 20	AN960-10L	WASHER - PLAIN	1	
- 21	MS24665-134	PIN - COTTER	1	
		---*---		
- 22	12C0183-1	BRACKET	1	
- 23	MS24665-285	COTTER PIN	1	
- 24	S378-3L	PULLEY	1	
		ATTACHING PARTS		
- 25	AN960-416L	WASHER - PLAIN	2	
- 26	AN4-10A	BOLT	1	
- 27	NAS679A08	NUT	1	
		---*---		
- 28	S226-5F	DOUBLER	2	
- 29	S225-4F	COVER	2	
		ATTACHING PARTS		
- 30	S1022Z8-8	SCREW	12	
		---*---		
- 31	26360-0100	ACTUATOR ASSEMBLY - 14 VOLT	1	
	38144-0100	SHEAR PIN 100 IN LBS	1	
		ATTACHING PARTS		
- 32	AN3-4A	BOLT	4	
		---*---		
- 33	12C0167-1	RIB ASSY	1	
- 34	S1C50-1-3.90	GROMMET BULK ITEM - 3.90 INCHES REQD	AR	
- 35	12C0169-1	DOUBLER	1	
		ATTACHING PARTS		
- 36	AN525-10R9	SCREW	2	
		---*---		
- 37	12C0168-1	COVER	1	
		ATTACHING PARTS		
- 38	AN525-832R7	SCREW	14	
- 39	NAS697A08	NUTPLATE	6	
- 40	NAS696A08	NUTPLATE	3	
		---*---		

CONTINUED ON NEXT PAGE

FIGURE AND INDEX NO.	PART NUMBER	DESCRIPTION 1 2 3 4 5 6 7	UNITS PER ASSY	USABLE ON CODE
1-13- 41	0512006-1	BRACKET	1	
- 42	49164-21	HARNESS BAND	REF	
		ATTACHING PARTS		
- 43	S1021Z6-8	SCREW	1	
		---*---		
- 44		CABLE ASSY CONTROLLER AMPLIFIER TO OMNI COUPLER	NP	
	28371-0009	PLUG ATTACHES TO CONTROLLER AMPLIFIER ARC	1	
	29410	PLUG ATTACHES TO OMNI COUPLER ARC	1	
- 45		CABLE ASSY CONTROLLER AMPLIFIER TO DIRECTIONAL GYRO	NP	
	28371-0005	PLUG ATTACHES TO CONTROLLER AMPLIFIER ARC	1	
	28326-0005	PLUG ATTACHES TO DIRECTIONAL GYRO ARC	1	
- 46		CABLE ASSY CONTROLLER AMPLIFIER TO TURN COORDINATOR AND -	NP	
		ACTUATOR CABLE		
	28336	PLUG ATTACHES TO CONTROLLER AMPLIFIER ARC	1	
	5C328-0002	PLUG ATTACHES TO TURN COORDINATOR ARC	1	
	28326-0009	PLUG ATTACHES TO ACTUATOR CABLE ARC	1	
- 47		CABLE ASSY ACTUATOR TO CONTROLLER AMPLIFIER CABLE	NP	
	28505-0009	PLUG ATTACHES TO CONTROLLER AMPLIFIER CABLE ARC	1	
- 48	28326-0009	PLUG ATTACHES TO ACTUATOR ARC	1	
- 49	C661001-0504	GYRO HORIZON	REF	
- 50	3C370-0100	DIRECTIONAL GYRO TYPE G-520A ARC	1	

NOTE

REFER TO THE 172 PARTS CATALOG
FOR VACUUM HOSES AND FITTINGS

CESSNA NAV-O-MATIC 300 INSTALLATION

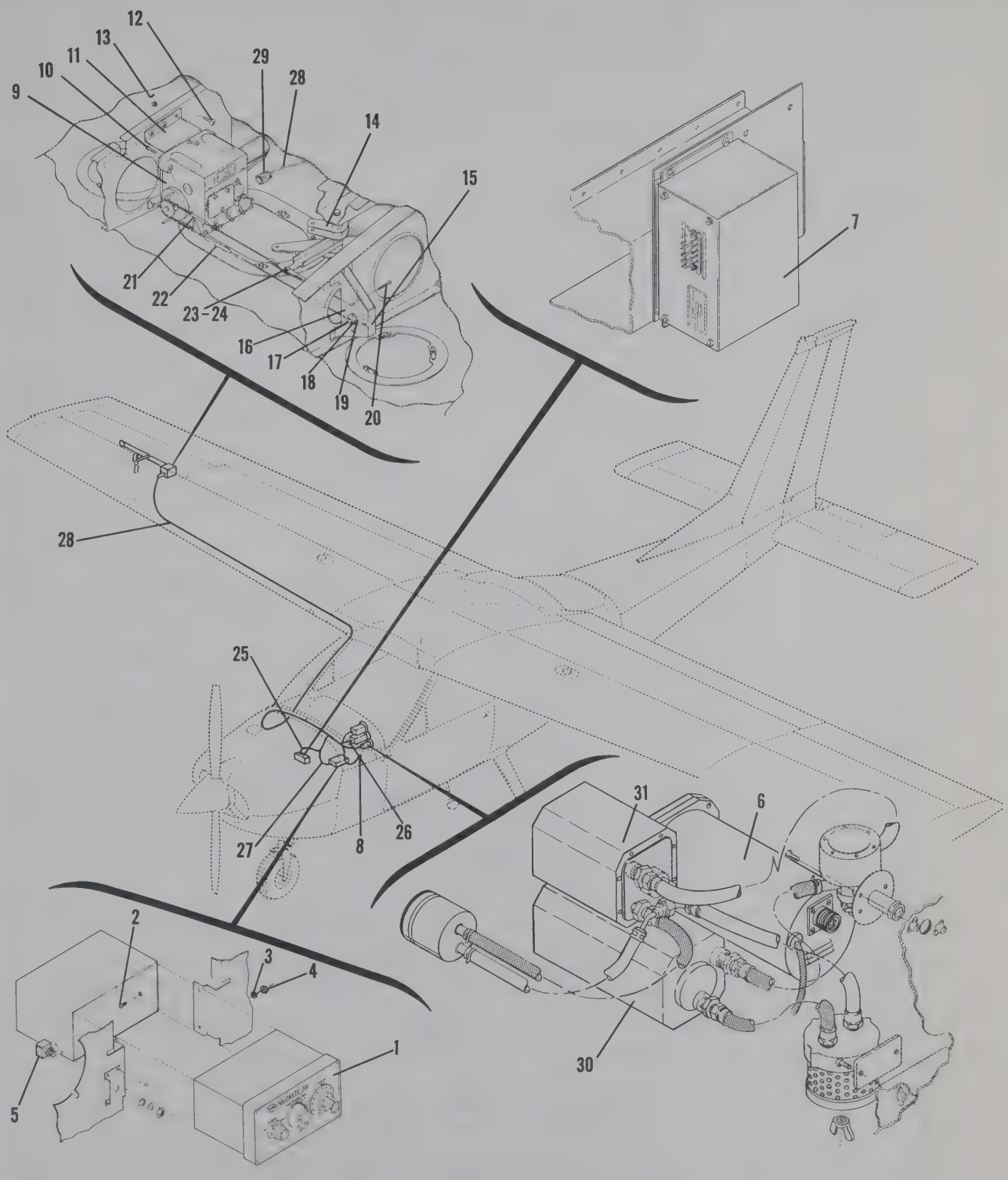

177 SERIAL 17701165 & ON

Figure 1-14. Cessna Nav-O-Matic 300 Installation - Model 177 Only

FIGURE AND INDEX NO.	PART NUMBER	DESCRIPTION 1 2 3 4 5 6 7	UNITS PER ASSY	USABLE ON CODE
1-14-		CESSNA NAV-O-MATIC 300 INSTALLATION - MODEL 177 ONLY	NP	
- 1	35660-1014	CONTROLLER AMPLIFIER TYPE C-594B ARC	1	
		ATTACHING PARTS		
- 2	AN507-632R6	SCREW	4	
- 3	AN960-6	WASHER	4	
- 4	NAS679A06	NUT	4	
		---*---		
- 5	1770000-209	SWITCH ASSY - OMNI USED ONLY WHEN DUAL OMNIS ARE INSTALLED	1	
- 6	35060-0014	TURN COORDINATOR TYPE G-5COA ARC	1	
		ATTACHING PARTS		
	AN515B6R12	SCREW	4	
		---*---		
- 7	289CC-0000	OMNI COUPLER TYPE CA-512A ARC	1	
		ATTACHING PARTS		
	AN515-8R8	SCREW	5	
	AN507-8R8	SCREW	2	
	S1648-08-75	RIVNUT	4	
		---*---		
- 8	S1360-10	CIRCUIT BREAKER	1	
- 9	26360-0100	AILERON ACTUATOR ASSY TYPE PA-510A	1	
	38144-0060	SHEAR PIN - RED - 60 INCH-POUNDS AILERON ACTUATOR	1	
		ATTACHING PARTS		
- 10	AN3-4A	BOLT	4	
	AN960-10	WASHER	4	
		---*---		
- 11	12CC027-1	SUPPORT	1	
		ATTACHING PARTS		
- 12	AN520-10R6	SCREW	6	
- 13	NAS679A3	NUT	6	
		---*---		
- 14	1221087-12	BELLCRANK ASSY REPLACES STANDARD -2 BELLCRANK WHEN AUTOPILOT IS INSTALLED	1	
- 15	12CC016-1	PULLEY SUPPORT	1	
- 16	MS20220-1	PULLEY	1	
		ATTACHING PARTS		
- 17	AN5-11A	BOLT	1	
- 18	NAS679A5	NUT	1	
- 19	AN960-516	WASHER	1	
		---*---		
- 20	MS2C665-285	COTTER PIN	3	
- 21	12700735-1	CHAIN & CABLE ASSY	1	
- 22	AN155-16S	BARREL ADJUSTABLE CABLE TENSION TO 30 LBS.	1	
- 23	MS2C392-2C9	PIN	1	
- 24	MS24665-132	COTTER PIN	1	
- 25		CABLE ASSY CONTROLLER AMPLIFIER TO OMNI COUPLER	NP	
	28371-0009	PLUG CONNECTS TO CONTROLLER AMPLIFIER ARC	1	
	2S410	PLUG CONNECTS TO OMNI CCUPLER ARC	1	
	S1838-1	HOUSING CONNECTS TO P-2 ON AUDIO JUNCTION BOX	1	
- 26		CABLE ASSY CONTROLLER AMPLIFIER TO DIRECTIONAL GYRO	1	
	28371-0005	PLUG CONNECTS TO CONTROLLER AMPLIFIER ARC	1	
	28326-0005	PLUG CONNECTS TO DIRECTIONAL GYRO ARC	1	
- 27		CABLE ASSY CONTROLLER AMPLIFIER TO AILERON ACTUATOR	NP	
		CABLE AND TURN COORDINATOR PIG-TAIL		
	28336-0000	PLUG CONNECTS TO CONTROLLER AMPLIFIER ARC	1	
	5C328-0002	PLUG CONNECTS TO TURN COORDINATOR ARC	1	
	28326-0009	PLUG CONNECTS TO AILERON ACTUATOR CABLE ARC	1	
- 28		CABLE ASSY AILERON ACTUATOR TO CONTROLLER AMPLIFIER	NP	
		CABLE		
- 29	285C5-0009	PLUG CONNECTS TO CONTROLLER AMPLIFIER CABLE ARC	1	
	38423-0001	PLUG CONNECTS TO AILERON ACTUATOR ARC	1	
- 30	3C370-0100	DIRECTIONAL GYRO TYPE G-520A ARC	1	
		ATTACHING PARTS		
	AN515B6R7	SCREW	4	
		---*---		
- 31	C661001-0504	GYRO HORIZON	REF	
		NOTE. REFER TO THE 177 PARTS CATALOG FOR VACUUM HOSES AND FITTINGS		

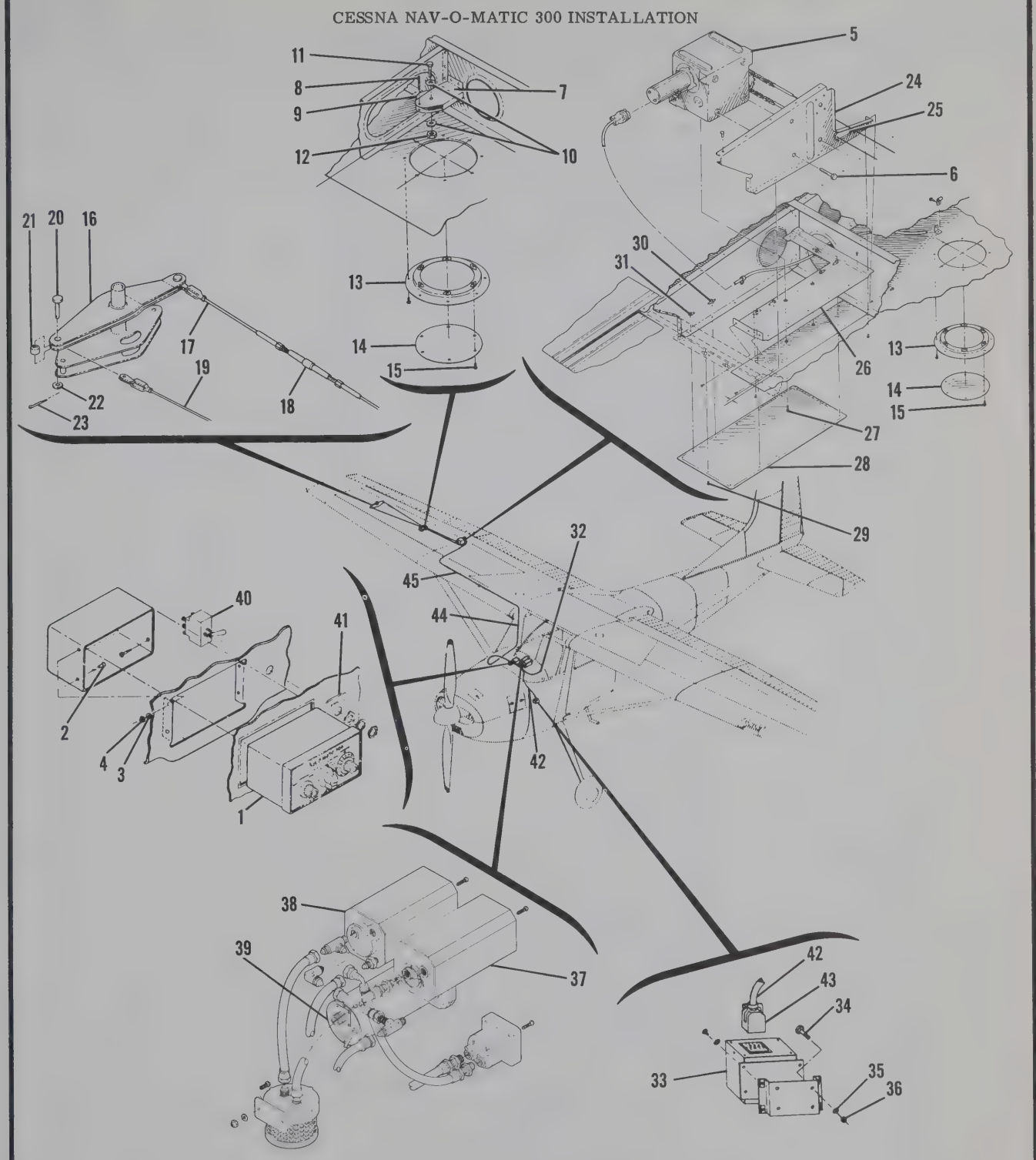

180 SERIAL 18051994 & ON
185 SERIAL 185-1448 & ON

Figure 1-15. Cessna Nav-O-Matic 300 Installation - Models 180 & 185 Only

FIGURE AND INDEX NO.	PART NUMBER	DESCRIPTION 1 2 3 4 5 6 7	UNITS PER ASSY	USABLE ON CODE
1-15-		CESSNA NAV-O-MATIC 300 INSTALLATION 180 & 185 ONLY	NP	
- 1	35660-1014	CONTROLLER AMPLIFIER	1	
		ATTACHING PARTS		
- 2	AN507-632R6	SCREW	4	
- 3	AN960-6	WASHER	4	
- 4	NAS679A06	NUT	4	
		---*---		
- 5	26360-0100	ACTUATOR ASSY TYPE PA-510A ARC	1	
	38144-0100	SHEAR PIN - 100 INCH-POUNDS AILERON ACTUATOR ARC --	1	
		ATTACHING PARTS		
- 6	AN3-4A	BOLT	4	
		---*---		
- 7	12C0183-1	BRACKET	1	
- 8	MS24665-134	COTTER PIN	1	
- 9	S378-3L	PULLEY	1	
		ATTACHING PARTS		
- 10	AN960-416L	WASHER - PLAIN	2	
- 11	AN4-10A	BOLT	1	
- 12	NAS679A4	NUT	1	
		---*---		
- 13	S226-5F	DOUBLER	2	
- 14	S225-4F	COVER	2	
		ATTACHING PARTS		
- 15	S1C22Z8-8	SCREW	12	
		---*---		
- 16	12C0180-1	BELLCRANK ASSY	1	
- 17	12C0182-2	CABLE ASSY	1	
		ATTACHING PARTS		
	MS2C392-2-9	PIN	1	
	12C0182-9	BUSHING	1	
	AN960C-10L	WASHER - PLAIN	1	
	AN380-2-2	PIN-COTTER	1	
- 18	AN155-16S	BARREL	1	
- 19	12C0182-1	CABLE & CHAIN ASSY	1	
		ATTACHING PARTS		
- 20	MS2C392-2-9	PIN	1	
- 21	12C0182-9	BUSHING	1	
- 22	AN960-10L	WASHER - PLAIN	1	
- 23	AN380-2-2	PIN - COTTER	1	
		---*---		
- 24	12C0167-1	RIB ASSY	1	
- 25	S1C50-1-3.90	GROMMET BULK ITEM - 3.90 INCHES REQD	AR	
- 26	12C0169-1	DOUBLER	1	
		ATTACHING PARTS		
- 27	AN525-10R9	SCREW	2	
		---*---		
- 28	12C0168-1	COVER	1	
		ATTACHING PARTS		
- 29	AN525-832R7	SCREW	14	
- 30	NAS697A08	NUTPLATE	6	
- 31	NAS697A08	NUTPLATE	12	
		---*---		
- 32	S1360-10	CIRCUIT BREAKER	1	
- 33	289C0	OMNI COUPLER ASSY	1	
		ATTACHING PARTS		
- 34	AN515-6R8	SCREW	4	
- 35	NAS70-177-5C0	WASHER	4	
- 36	NAS679A08	NUT	4	
		---*---		
- 37	3C370-0100	DIRECTIONAL GYRO	1	
		ATTACHING PARTS		
	AN507-632R10	SCREW	4	
		---*---		

CONTINUED ON NEXT PAGE

FIGURE AND INDEX NO.	PART NUMBER	DESCRIPTION 1 2 3 4 5 6 7	UNITS PER ASSY	USABLE ON CODE
1-15- 38	C661C01-0501	GYRO HORIZON	REF	
		ATTACHING PARTS		
	AN507-632R8	SCREW	4	
		---*---		
		ATTACHING PARTS		
- 39	35C60-0014	TURN COORDINATOR	1	
	AN515B6R14	SCREW	4	
	AN936A6B	WASHER	4	
	AN340B6	NUT	4	
		---*---		
- 40	077C400-271	SWITCH ASSY USED ONLY WHEN DUAL OMNIS ARE INSTALLED	1	
- 41	C700196-1	PLACARD ASSY	1	
- 42		CABLE ASSY CONTROLLER AMPLIFIER TO OMNI COUPLER	NP	
	28371-0009	PLUG CONNECTS TO CONTROLLER AMPLIFIER ARC	1	
- 43	29410	PLUG CONNECTS TO OMNI COUPLER ARC	1	
		CABLE ASSY CONTROLLER AMPLIFIER TO DIRECTIONAL GYRO	NP	
	28371-0005	PLUG CONNECTS TO CONTROLLER AMPLIFIER ARC	1	
	28326-0005	PLUG CONNECTS TO DIRECTIONAL GYRO ARC	1	
- 44		CABLE ASSY CONTROLLER AMPLIFIER TO ACTUATOR CABLE AND TURN COORDINATOR	NP	
	28336	PLUG CONNECTS TO CONTROLLER AMPLIFIER ARC	1	
	28326-0009	PLUG CONNECTS TO ACTUATOR CABLE ARC	1	
	50328-0002	PLUG CONNECTS TO TURN COORDINATOR ARC	1	
- 45		CABLE ASSY ACTUATOR TO CONTROLLER AMPLIFIER CABLE	NP	
	28505-0009	PLUG CONNECTS TO CONTROLLER AMPLIFIER CABLE ARC	1	
	28326-0009	PLUG CONNECTS TO ACTUATOR ARC	1	
	38423-0001	PLUG CONNECTS TO ACTUATOR ARC	1	
		CABLE ASSY TURN COORDINATOR TO BUS BAR	NP	
	28460	PLUG CONNECTS TO TURN COORDINATOR ARC	1	

NOTE

REFER TO THE 180-185 PARTS CATALOG FOR VACUUM HOSES AND FITTINGS

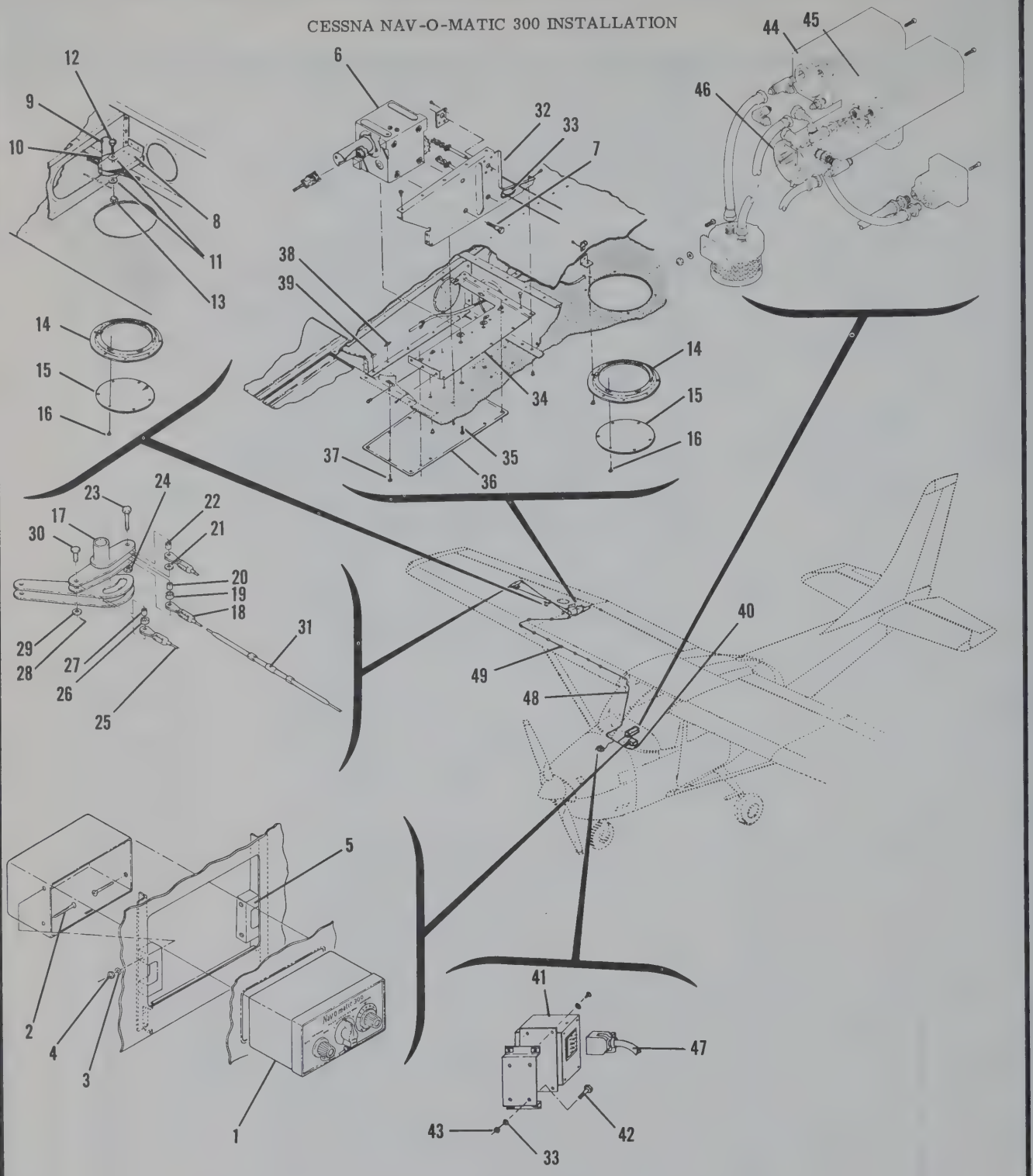

182 SERIAL 18259306 & ON
A182 SERIAL A182-0117 & ON

Figure 1-16. Cessna Nav-O-Matic 300 Installation - Model 182 Only

FIGURE AND INDEX NO.	PART NUMBER	DESCRIPTION 1 2 3 4 5 6 7	UNITS PER ASSY	USABLE ON CODE
1-16-		CESSNA NAV-O-MATIC 300 INSTALLATION 182 ONLY	NP	
- 1	35660-1014	CONTROLLER AMPLIFIER TYPE C-594B ARC	1	
		ATTACHING PARTS		
- 2	AN5C7-632R20	SCREW	4	
- 3	AN960-6	WASHER	4	
- 4	NAS679A06	NUT	4	
- 5	0713739-1	SPACER	2	
		---*---		
- 6	26360-0100	ACTUATOR ASSY TYPE PA-510A	1	
	38144-0100	SHEAR PIN ARC	1	
		ATTACHING PARTS		
- 7	AN3-4A	BOLT	4	
		---*---		
- 8	12C0183-1	BRACKET	1	
- 9	MS24665-134	PIN - COTTER	1	
- 10	S378-3L	PULLEY	1	
		ATTACHING PARTS		
- 11	AN960-416L	WASHER - PLAIN	2	
- 12	AN4-10A	BOLT	1	
- 13	MS2C365-428C	NUT	1	
		---*---		
- 14	S226-5F	DOUBLER	2	
- 15	S225-4F	COVER	2	
		ATTACHING PARTS		
- 16	S1022Z8-8	SCREW	12	
		---*---		
- 17	0760705-1	BELLCRANK ASSY	1	
- 18	1200182-2	CABLE ASSY	1	
		ATTACHING PARTS		
- 19	NAS42DD8-12	SPACER	1	
- 20	C760117-2	BUSHING	1	
- 21	AN960-416	WASHER	1	
- 22	C760117-1	BUSHING	1	
- 23	AN3-9A	BOLT	1	
- 24	NAS679A3	NUT	1	
		---*---		
- 25	1200182-1	CHAIN & CABLE ASSY	1	
		ATTACHING PARTS		
- 26	NAS42DD8-12	SPACER	1	
- 27	C760117-2	BUSHING	1	
- 28	MS24665-285	COTTER PIN	1	
- 29	AN960-10L	WASHER	1	
- 30	MS2C392-2-15	PIN	1	
		---*---		
- 31	AN155B16S	BARREL	1	
- 32	12C0167-1	RIB ASSY	1	
- 33	S1C50-1-3.90	GROMMET BULK ITEM - 3.90 INCHES REQD	AR	
- 34	1200169-1	DOUBLER	1	
		ATTACHING PARTS		
- 35	AN525-10R9	SCREW	2	
		---*---		
- 36	12C0168-1	COVER	1	
		ATTACHING PARTS		
- 37	AN525-832R7	SCREW	14	
- 38	NAS697A08	NUTPLATE	6	
- 39	NAS697A08	NUTPLATE	12	
		---*---		
- 40	S1360-10	CIRCUIT BREAKER	1	
- 41	289C0-0000	OMNI COUPLER	1	
		ATTACHING PARTS		
- 42	AN515-6R5	SCREW	4	
- 43	NAS679A06	NUT	4	
		---*---		

CONTINUED ON NEXT PAGE

FIGURE AND INDEX NO.	PART NUMBER	DESCRIPTION 1 2 3 4 5 6 7	UNITS PER ASSY	USABLE ON CODE
1-16- 44	C661C01-0504	GYRO HORIZON	1	
		ATTACHING PARTS		
	AN5C7-632R8	SCREW	4	
		---*---		
- 45	3C370-0100	DIRECTIONAL GYRO TYPE G-520A ARC	1	
		ATTACHING PARTS		
	AN5C7-632R10	SCREW	3	
		---*---		
- 46	35C60-0014	TURN COORDINATOR ARC	1	
		ATTACHING PARTS		
	AN515B6R12	SCREW	4	
	AN936A6B	WASHER	4	
	AN340B6	NUT	4	
		---*---		
- 47		CABLE ASSY CONTROLLER TO OMNI COUPLER	NP	
	28371-0009	CONNECTOR ATTACHES TO CONTROLLER ARC	1	
	29410	CONNECTOR ATTACHES TO OMNI COUPLER ARC	1	
	S1838-1	HOUSING CONNECTS TO P-2 ON AUDIO JUNCTION BOX	1	
		CABLE ASSY CONTROLLER TO DIRECTIONAL GYRO	NP	
	28371-0005	CONNECTOR ATTACHES TO CONTROLLER ARC	1	
	28326-0005	CONNECTOR ATTACHES TO DIRECTIONAL GYRO ARC	1	
- 48		CABLE ASSY CONTROLLER TO AILERON ACTUATOR CABLE	NP	
	28336	CONNECTOR ATTACHES TO CONTROLLER ARC	1	
	28326-0009	CONNECTOR ATTACHES TO AILERON ACTUATOR CABLE ARC	1	
- 49		CABLE ASSY AILERON ACTUATOR TO CONTROLLER CABLE	NP	
	28326-0009	CONNECTOR ATTACHES TO AILERON ACTUATOR ARC	1	
	28505-0009	CONNECTOR ATTACHES TO CONTROLLER CABLE ARC	1	
		CABLE ASSY CONTROLLER TO TURN COORDINATOR	NP	
	28336	CONNECTOR ATTACHES TO CONTROLLER ARC	1	
	5C328-0002	CONNECTOR ATTACHES TO TURN COORDINATOR ARC	1	
		CABLE ASSY TURN COORDINATOR TO BUS BAR	NP	
	28460	CONNECTOR ATTACHES TO TURN COORDINATOR	1	
		NOTE REFER TO THE 182 PARTS CATALOG FOR VACUUM HOSES AND FITTINGS		

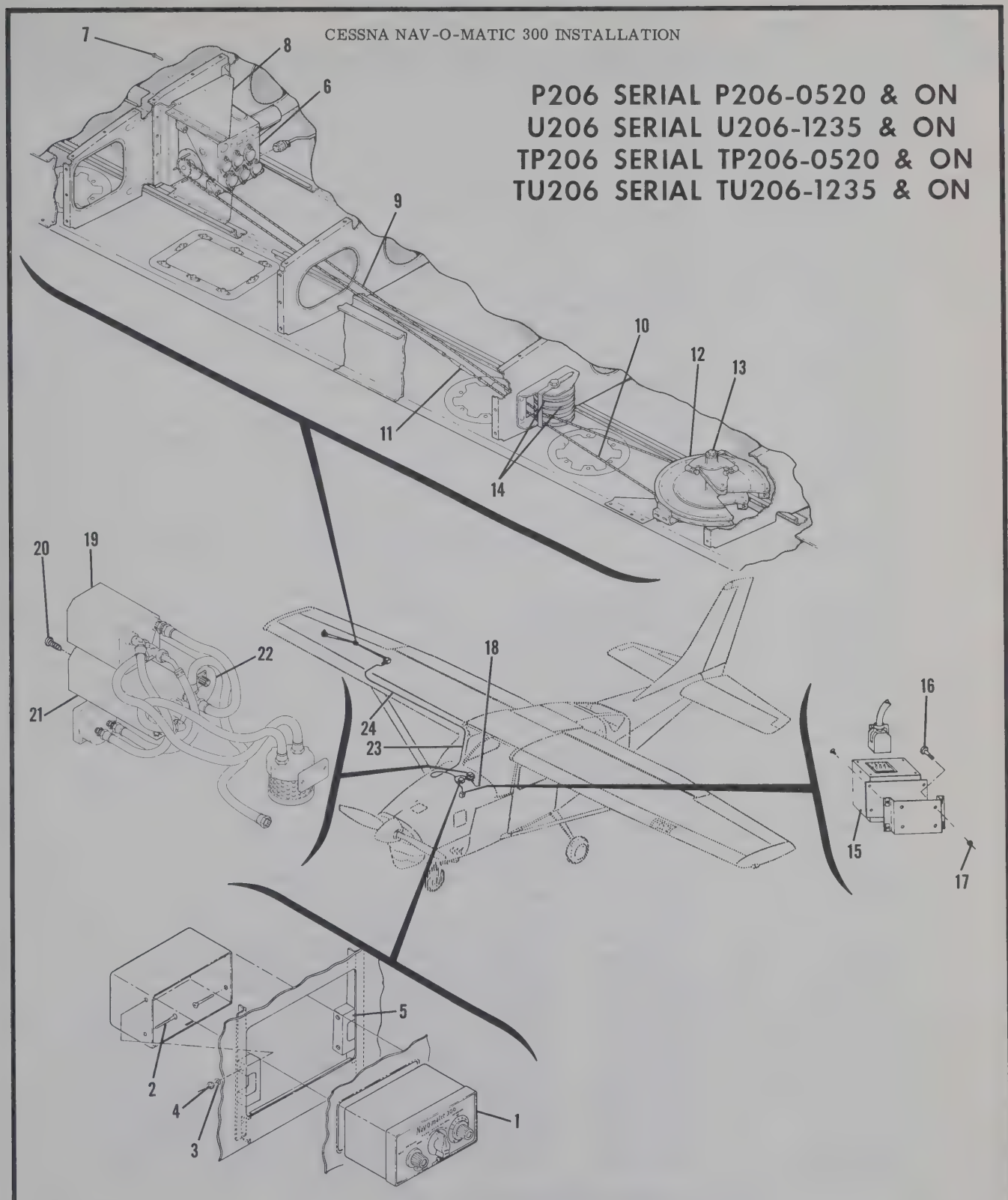

Figure 1-17. Cessna Nav-O-Matic 300 Installation - Model 206 Series Only

FIGURE AND INDEX NO.	PART NUMBER	DESCRIPTION 1 2 3 4 5 6 7	UNITS PER ASSY	USABLE ON CODE
1-17-		CESSNA NAV-O-MATIC 300 INSTALLATION 206 SERIES ONLY	NP	
- 1	35660-1014	CONTROLLER AMPLIFIER TYPE C-594B ARC	1	
		ATTACHING PARTS		
- 2	AN507-632R20	SCREW	4	
- 3	AN960-6	WASHER	4	
- 4	MS20365-632C	NUT	4	
- 5	C713739-1	SPACER	2	
		---*---		
- 6	26360-0100	ACTUATOR ASSY TYPE PA-510A	1	
	38144-0100	SHEAR PIN 100 INCH POUNDS GOLD	1	
		ATTACHING PARTS		
- 7	AN3-4A	BOLT	4	
		---*---		
- 8	122C091-1	BRACKET	1	
- 9	127C049-9	CHAIN & CABLE ASSY	1	
		ATTACHING PARTS		
	AN21-9	BOLT	1	
	AN320-1	NUT	1	
	MS24665-5	PIN-COTTER	1	
		---*---		
- 10	127C049-10	CABLE ASSY	1	
		ATTACHING PARTS		
- 11	AN155B16S	BARREL	1	
	AN21-9	BOLT	1	
	AN320-1	NUT	1	
	MS24665-5	PIN-COTTER	1	
		---*---		
- 12	126C095-1	BELLCRANK ASSY	1	
		ATTACHING PARTS		
- 13	AN4-51A	BOLT	1	
	C522629-1	WASHER AT LOWER END OF BELLCRANK	1	
	NAS679A4	NUT	1	
		---*---		
- 14	MS20220-2	PULLEY	2	
- 15	289C0-C000	OMNI COUPLER ASSEMBLY TYPE CA-512A ARC	1	
		ATTACHING PARTS		
- 16	AN515-6R5	SCREW	4	
- 17	NAS679A06	NUT	4	
		---*---		
- 18	S1360-10	CIRCUIT BREAKER	1	
- 19	C661C01-0504	GYRO HORIZON	REF	
		ATTACHING PARTS		
- 20	AN520-6R10	SCREW	4	
		---*---		
- 21	30370-0100	DIRECTIONAL GYRO TYPE G-520A ARC	1	
		ATTACHING PARTS		
	AN507-632R10	SCREW	3	
		---*---		
- 22	35C60-0014	TURN COORDINATOR	1	
		ATTACHING PARTS		
	AN51586R12	SCREW	4	
	AN936A6B	WASHER	4	
	AN340B6	NUT	4	
		---*---		
		CABLE ASSY CONTROLLER AMPLIFIER TO OMNI COUPLER	NP	
	28371-C009	CONNECTOR ATTACHES TO CONTROLLER AMPLIFIER ARC	1	
	29410	CONNECTOR ATTACHES TO OMNI COUPLER ARC	1	
	S1838-1	HOUSING ATTACHES TO P-2 ON AUDIO JUNCTION BOX	1	
		CABLE ASSY CONTROLLER AMPLIFIER TO DIRECTIONAL GYRO	NP	
	28371-C005	CONNECTOR ATTACHES TO CONTROLLER AMPLIFIER ARC	1	
	28326-0005	CONNECTOR ATTACHES TO DIRECTIONAL GYRO ARC	1	
- 23		CABLE ASSY CONTROLLER AMPLIFIER TO ACTUATOR CABLE	NP	
	28336	CONNECTOR ATTACHES TO CONTROLLER AMPLIFIER ARC	1	
	28326-0009	CONNECTOR ATTACHES TO ACTUATOR CABLE ARC	1	
		CABLE ASSY CONTROLLER AMPLIFIER TO TURN COORDINATOR	NP	
	28336	CONNECTOR ATTACHES TO CONTROLLER AMPLIFIER ARC	1	
	50328-C002	CONNECTOR ATTACHES TO TURN COORDINATOR ARC	1	
- 24		CABLE ASSY CONTROLLER AMPLIFIER CABLE TO ACTUATOR	NP	
	28505-0009	CONNECTOR ATTACHES TO CONTROLLER AMPLIFIER CABLE ARC	1	
	28326-0009	CONNECTOR ATTACHES TO ACTUATOR ASSY	1	
		NOTE REFER TO THE 206 PARTS CATALOG FOR VACUUM HOSES AND FITTINGS		

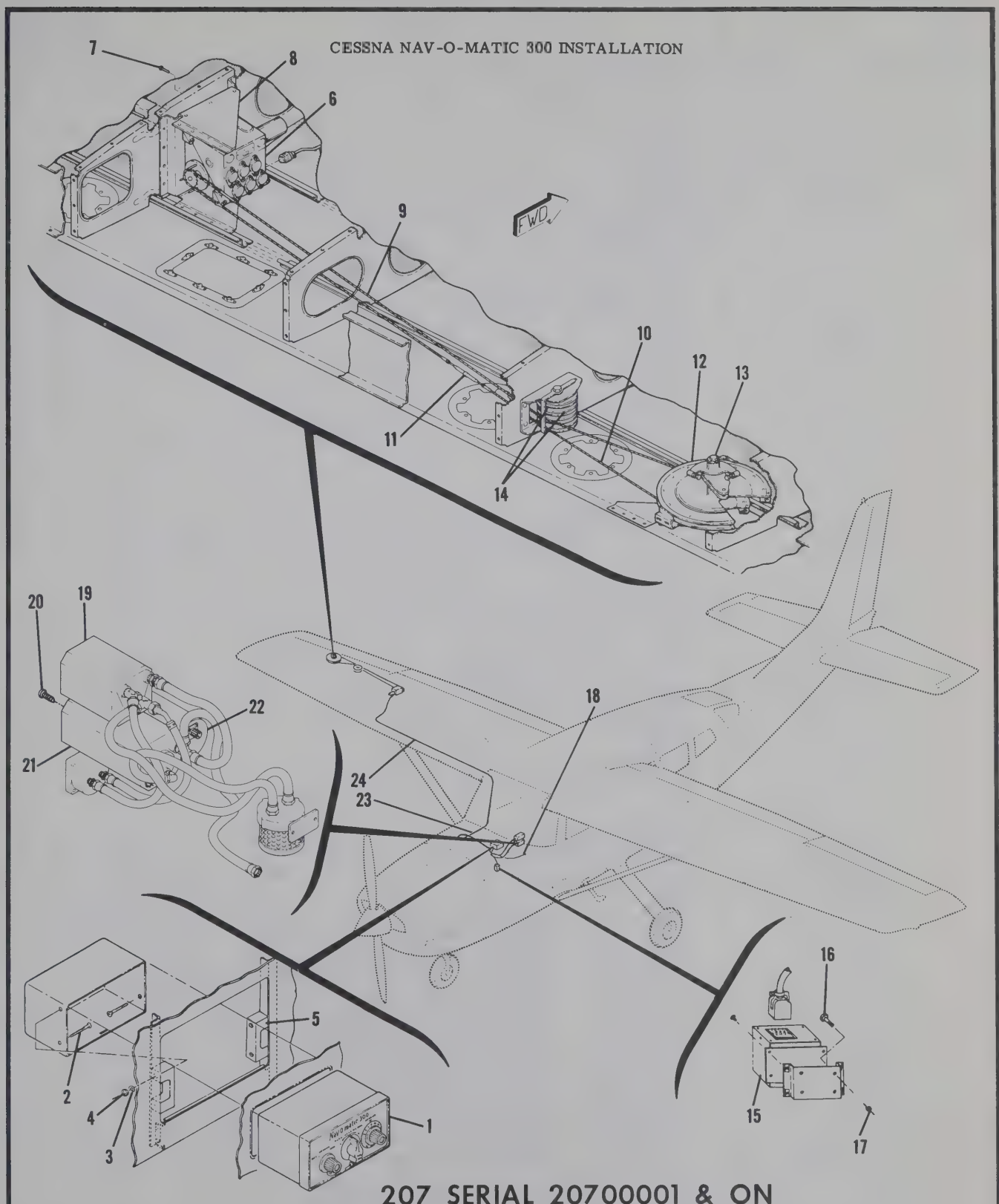

Figure 1-18. Cessna Nav-O-Matic 300 Installation - 207 Series Only

FIGURE AND INDEX NO.	PART NUMBER	DESCRIPTION 1 2 3 4 5 6 7	UNITS PER ASSY	USABLE ON CODE
1-18-		CESSNA NAV-O-MATIC 300 INSTALLATION 207 SERIES ONLY	NP	
- 1	35660-1014	CONTROLER AMPLIFIER TYPE C-594B ARC	1	
		ATTACHING PARTS		
- 2	AN5C7-632R20	SCREW	4	
- 3	AN960-6	WASHER	4	
- 4	NAS679A06	NUT	4	
- 5	C713739-1	SPACER	2	
		---*---		
- 6	26360-0100	ACTUATOR ASSY TYPE PA-510A ARC	1	
	38144-0100	SHEAR PIN 100 INCH POUNDS GOLD	1	
		ATTACHING PARTS		
- 7	AN3-4A	BOLT	4	
		---*---		
- 8	1220091-1	BRACKET	1	
- 9	127C049-9	CHAIN & CABLE ASSY	1	
		ATTACHING PARTS		
	AN21-9	BOLT	1	
	AN320-1	NUT	1	
	MS24665-5	PIN-COTTER	1	
		---*---		
- 10	127C049-10	CABLE ASSY	1	
		ATTACHING PARTS		
- 11	AN155B16S	BARREL	1	
	AN21-9	BOLT	1	
	AN320-1	NUT	1	
	MS24665-5	PIN-COTTER	1	
		---*---		
- 12	126C095-1	BELLCRANK ASSY	1	
		ATTACHING PARTS		
- 13	AN4-51A	BOLT	1	
	0522629-1	WASHER AT LOWER END OF BELLCRANK	1	
	NAS679A4	NUT	1	
		---*---		
- 14	MS20220-2	PULLEY	2	
- 15	289C0-0000	OMNI COUPLER ASSY TYPE CA-512A ARC	1	
		ATTACHING PARTS		
- 16	AN515-6R5	SCREW	4	
- 17	NAS679A06	NUT	4	
		---*---		
- 18	S1360-10	CIRCUIT BREAKER	1	
- 19	C661001-0504	GYRO HORIZON	REF	
		ATTACHING PARTS		
- 20	AN520-6R10	SCREW	4	
		---*---		
- 21	3C370-0100	GYRO-DIRECTIONAL TYPE G-520A ARC	1	
		ATTACHING PARTS		
	AN5C7-632R10	SCREW	3	
		---*---		
- 22	35C60-0014	TURN COORDINATOR	1	
		ATTACHING PARTS		
	AN515B6R12	SCREW	4	
	AN936A6B	WASHER	4	
	AN340B6	NUT	4	
		---*---		
		CABLE ASSY CONTROLLER AMPLIFIER TO OMNI COUPLER	NP	
	28371-0009	CONNECTOR ATTACHES TO CONTROLLER AMPLIFIER ARC	1	
	29410	CONNECTOR ATTACHES TO OMNI COUPLER ARC	1	
	S1838-1	HOUSING ATTACHES TO P-2 ON AUDIO JUNCTION BOX	1	
		CABLE ASSY CONTROLLER AMPLIFIER TO DIRECTIONAL GYRO	NP	
	28371-0005	CONNECTOR ATTACHES TO CONTROLLER AMPLIFIER ARC	1	
	28326-0005	CONNECTOR ATTACHES TO DIRECTIONAL GYRO ARC	1	
- 23		CABLE ASSY CONTROLLER AMPLIFIER TO ACTUATOR CABLE	NP	
	28336	CONNECTOR ATTACHES TO CONTROLLER AMPLIFIER ARC	1	
	28336-0009	CONNECTOR ATTACHES TO ACTUATOR CABLE ARC	1	
		CABLE ASSY CONTROLLER AMPLIFIER TO TURN COORDINATOR	NP	
	28336	CONNECTOR ATTACHES TO CONTROLLER AMPLIFIER ARC	1	
	5C328-0002	CONNECTOR ATTACHES TO TURN COORDINATOR ARC	1	
- 24		CABLE ASSY CONTROLLER AMPLIFIER CABLE TO ACTUATOR	NP	
	28505-0009	CONNECTOR ATTACHES TO CONTROLLER AMPLIFIER CABLE ARC	1	
	28326-0009	CONNECTOR ATTACHES TO ACTUATOR ASSY	1	
		NOTE. REFER TO THE 207 PARTS CATALOG FOR VACUUM HOSES AND FITTINGS		

CESSNA NAV-O-MATIC 300 INSTALLATION

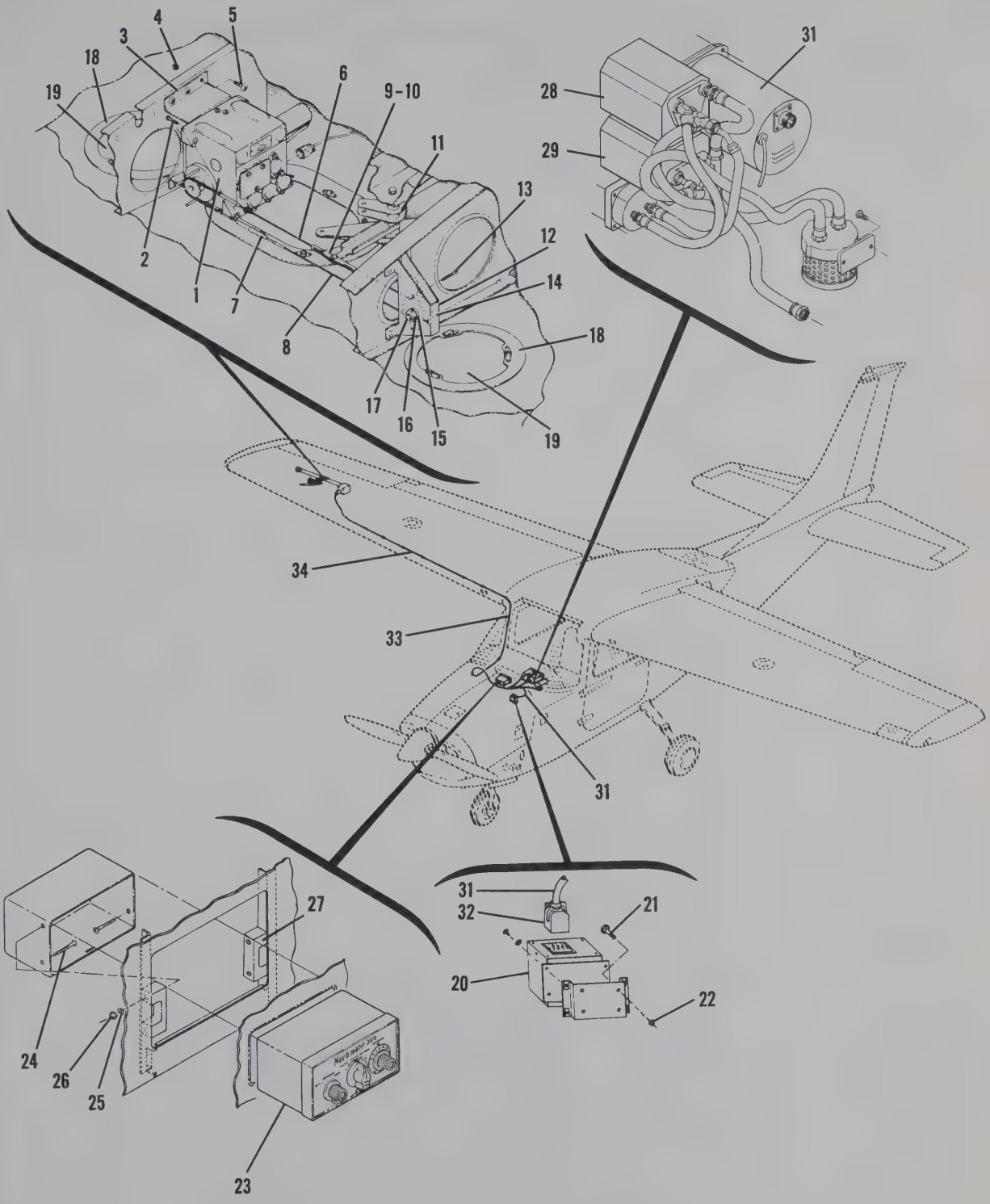

210 SERIAL 21059062 & ON
T210 SERIAL T210-0393 & ON

Figure 1-19. Cessna Nav-O-Matic 300 Installation - Model 210 Series Only

FIGURE AND INDEX NO.	PART NUMBER	DESCRIPTION 1 2 3 4 5 6 7	UNITS PER ASSY	USABLE ON CODE
1-19-		CESSNA NAV-O-MATIC 300 INSTALLATION 210 SERIES	NP	
- 1	26360-0100	ACTUATOR ASSY TYPE PA-510A ARC	1	
	38144-0060	SHEAR PIN 60 INCH POUNDS - RED ARC	1	
		ATTACHING PARTS		
	AN960-10	WASHER	4	
- 2	AN3-4A	BOLT	4	
		---*---		
- 3	12CC027-1	SUPPORT - AUTOPILOT	1	
		ATTACHING PARTS		
- 4	NAS679A3	NUT	4	
- 5	AN520DD10R6	SCREW	4	
		---*---		
- 6	12CC735-1	CHAIN & CABLE ASSY	1	
- 7	AN155-16S	BARREL	1	
- 8	1200735-2	CABLE ASSY	1	
		ATTACHING PARTS		
- 9	MS2C392-2C9	PIN	1	
- 10	MS24665-132	PIN-COTTER	3	
		---*---		
- 11	1221087-12	BELLCRANK ASSY	1	
- 12	12CC016-1	PULLEY SUPPORT	1	
- 13	MS24665-285	PIN - COTTER	1	
- 14	MS2C220-1	PULLEY	1	
		ATTACHING PARTS		
- 15	AN960-516	WASHER	1	
- 16	NAS679A5C	NUT	1	
- 17	AN5-11A	BOLT	1	
		---*---		
- 18	S226-2	DOUBLER	2	
- 19	S225-2	PLATE	2	
- 20	289C0-0000	OMNI COUPLER ASSY TYPE CA-512A ARC	1	
		ATTACHING PARTS		
- 21	AN515-6R5	SCREW	4	
- 22	NAS679A06	NUT	4	
		---*---		
- 23	35660-1014	CONTROLLER AMPLIFIER TYPE C594B ARC	1	
		ATTACHING PARTS		
- 24	AN507-632R20	SCREW	4	
- 25	AN960-6	WASHER	4	
- 26	NAS679A06	NUT	4	
- 27	C713739-1	SPACER	2	
		---*---		
- 28	C661C01-0504	GYRO HORIZON	1	
		ATTACHING PARTS		
	AN5206R10	SCREW	4	
		---*---		
- 29	3C370-0100	DIRECTIONAL GYRO TYPE G-520A ARC	1	
		ATTACHING PARTS		
- 30	AN507-632R20	SCREW	3	
		---*---		
- 31	35C60-0014	TURN COORDINATOR	1	
		ATTACHING PARTS		
	AN515B6R12	SCREW	4	
	AN936A6B	WASHER	4	
	AN340B6	NUT	4	
		---*---		
- 32		CABLE ASSY CONTROLLER AMPLIFIER TO OMNI COUPLER	NP	
	28371-0009	CONNECTOR ATTACHES TO CONTROLLER AMPLIFIER ARC	1	
- 33	2S410	CONNECTOR ATTACHES TO OMNI COUPLER ARC	1	
	S1838-1	HOUSING ATTACHES TO P-2 ON AUDIO JUNCTION BOX	1	
		CABLE ASSY CONTROLLER AMPLIFIER TO DIRECTIONAL GYRO	NP	
	28371-0005	CONNECTOR ATTACHES TO CONTROLLER AMPLIFIER ARC	1	
	28326-0005	CONNECTOR ATTACHES TO DIRECTIONAL GYRO ARC	1	

CONTINUED ON NEXT PAGE

FIGURE AND INDEX NO.	PART NUMBER	1 2 3 4 5 6 7 DESCRIPTION	UNITS PER ASSY	USABLE ON CODE
1-19- 34		CABLE ASSY CONTROLLER AMPLIFIER TO ACTUATOR CABLE --------	NP	
	28336	CONNECTOR ATTACHES TO CONTROLLER AMPLIFIER ARC ----	1	
	28326-0009	CONNECTOR ATTACHES TO ACTUATOR CABLE ARC ----------	1	
		CABLE ASSY CONTROLLER AMPLIFIER TO TURN COORDINATOR -----	NP	
	28336	CONNECTOR ATTACHES TO CONTROLLER AMPLIFIER ARC ----	1	
	5C328-0002	CONNECTOR ATTACHES TO TURN COORDINATOR ARC --------	1	
- 35		CABLE ASSY ACTUATOR ASSY TO CONTROLLER AMPLIFIER CABLE --	NP	
	28326-0009	CONNECTOR ATTACHES TO ACTUATOR ARC ----------	1	
	285C5-0009	CONNECTOR ATTACHES TO CONTROLLER AMPLIFIER CABLE ARC	1	
		NOTE		
		REFER TO THE 210 PARTS CATALOG FOR VACUUM HOSES AND FITTINGS		

CESSNA NAV-O-MATIC 300 INSTALLATION

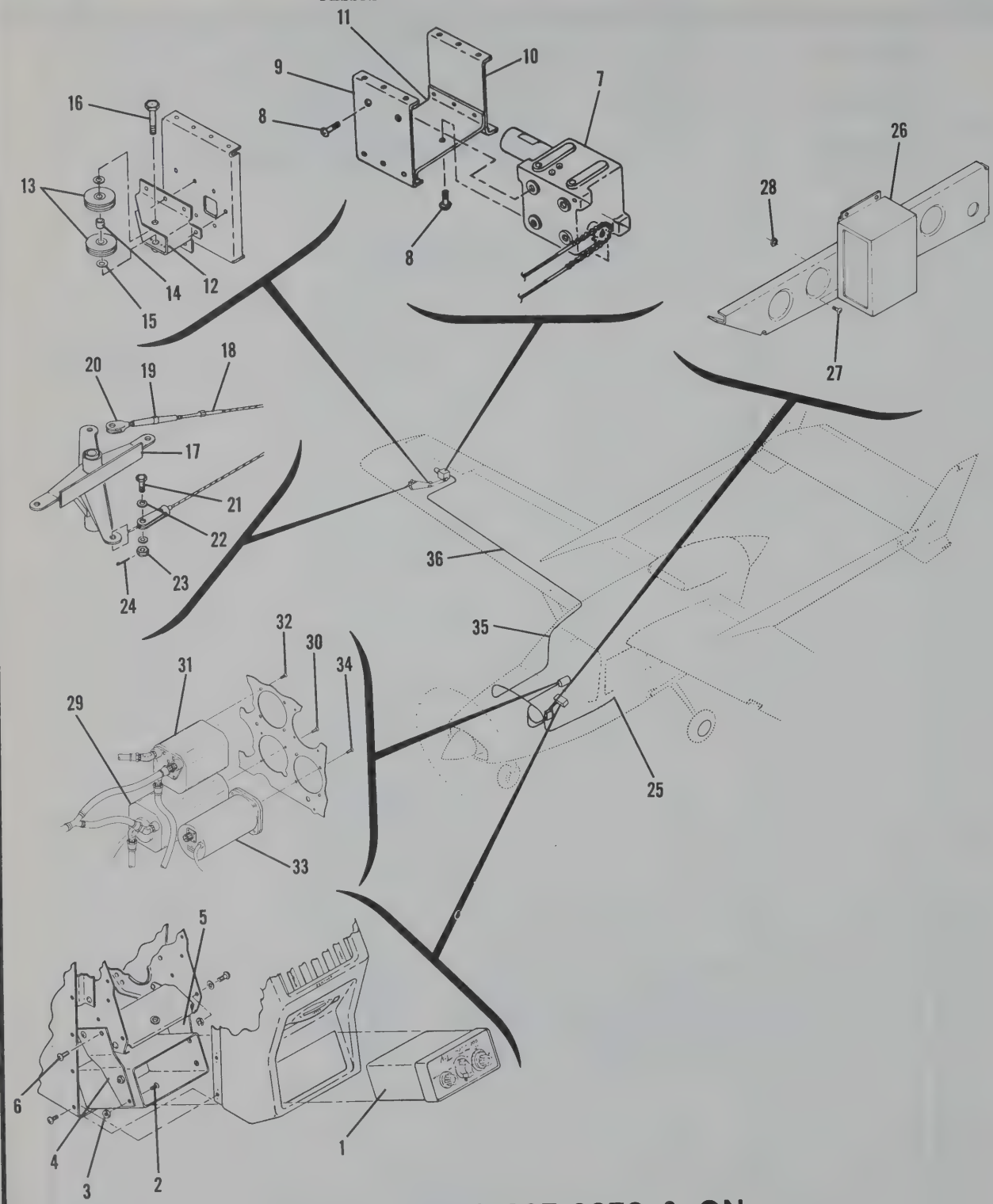

337 SERIAL 337-0979 & ON
T337 SERIAL T337-0979 & ON

Figure 1-20. Cessna Nav-O-Matic 300 Installation - Models 337 & T337 Only

FIGURE AND INDEX NO.	PART NUMBER	DESCRIPTION 1 2 3 4 5 6 7	UNITS PER ASSY	USABLE ON CODE
1-20-		CESSNA NAV-O-MATIC 300 INSTALLATION 337 & T337 ----------	NP	
		1968 & ON		
- 1	35660-1028	CONTROLLER AMPLIFIER TYPE C-594B ARC ----------	1	
		ATTACHING PARTS		
- 2	AN5C7-632R6	SCREW ----------	4	
- 3	NAS679A06	NUT ----------	4	
		---*---		
- 4	147C066-23	BRACKET - CONTROLLER - LH ----------	1	
- 5	147C066-24	BRACKET - CONTROLLER - RH ----------	1	
		ATTACHING PARTS		
- 6	AN515-8R8	SCREW ----------	4	
		---*---		
- 7	29510-0001	ACTUATOR ASSY TYPE PA-511A ARC ----------	1	
	38144-0060	SHEAR PIN 60 INCH POUNDS - RED ARC ----------	1	
		ATTACHING PARTS		
	AN960-10	WASHER ----------	4	
- 8	AN520-10R10	SCREW ----------	4	
		---*---		
- 9	1422023-1	PLATE - CHORD TIE ----------	1	
- 10	1422023-2	PLATE - CHORD TIE ----------	1	
- 11	1422023-3	PLATE - ACTUATOR SUPPORT ----------	1	
	147C066-9	DOOR - ACCESS NOT SHOWN ----------	1	
		ATTACHING PARTS		
	AN507-1032R8	SCREW ----------	16	
		---*---		
- 12	147C067-4	BRACKET ASSY - PULLEY ----------	1	
- 13	S378-1	PULLEY ----------	2	
		ATTACHING PARTS		
- 14	NAS43-3-15	SPACER ----------	1	
- 15	AN960-10L	WASHER - PLAIN ----------	2	
- 16	AN3-12A	BOLT ----------	1	
		---*---		
- 17	1462000-2	BELLCRANK ASSY ----------	1	
- 18	156CC08-2	CHAIN & CABLE ASSY ----------	1	
		ATTACHING PARTS		
- 19	AN155-16S	BARREL - TURNBUCKEL ----------	1	
- 20	AN161-16LS	FORK ----------	1	
- 21	AN3-7	BOLT ----------	2	
- 22	AN960-C10L	WASHER-PLAIN ----------	2	
- 23	AN310-C3	NUT ----------	2	
- 24	MS24665-134	PIN - COTTER ----------	2	
		---*---		
- 25	S1360-5	CIRCUIT BREAKER ----------	1	
- 26	289C0-0000	OMNI COUPLER ----------	1	
		ATTACHING PARTS		
- 27	AN515-8R18	SCREW ----------	2	
	NAS43DD3-48	SPACER ----------	2	
- 28	NAS679A08	NUT ----------	2	
		---*---		
- 29	3C370-0100	DIRECTIONAL GYRO TYPE G-520A ARC ----------	1	
		ATTACHING PARTS		
- 30	AN5C7-632R10	SCREW ----------	3	
		---*---		
- 31	C661001-0504	HORIZONTAL GYRO ----------	1	
		ATTACHING PARTS		
- 32	AN5206R10	SCREW ----------	4	
		---*---		
- 33	35C60-0028	TURN COORDINATOR ----------	1	
		ATTACHING PARTS		
- 34	AN515B6R12	SCREW ----------	4	
	AN936A6B	WASHER ----------	4	
	AN34086	NUT ----------	4	
		---*---		

CONTINUED ON NEXT PAGE

FIGURE AND INDEX NO.	PART NUMBER	DESCRIPTION 1 2 3 4 5 6 7	UNITS PER ASSY	USABLE ON CODE
1-20-		CABLE ASSY CONTROLLER AMPLIFIER TO OMNI COUPLER ----------	NP	
	28371-0009	CONNECTOR ATTACHES TO CONTROLLER AMPLIFIER ARC ----	1	
	29410	CONNECTOR ATTACHES TO OMNI COUPLER ARC ----------	1	
	S1838-1	HOUSING ATTACHES TO P2 CN AUDIO JUNCTION BOX ----------	1	
		CABLE ASSY CONTROLLER AMPLIFIER TO DIRECTIONAL GYRO -----	NP	
	28371-0005	CONNECTOR ATTACHES TO CONTROLLER AMPLIFIER ----------	1	
	30370-0100	CONNECTOR ATTACHES TO DIRECTIONAL GYRO ----------	1	
- 35		CABLE ASSY CONTROLLER AMPLIFIER TO ACTUATOR CABLE -------	NP	
	28336	CONNECTOR ATTACHES TO CONTROLLER AMPLIFIER ARC ----	1	
	S1641-6	HOUSING - SOCKET ATTACHES TO ACTUATOR CABLE ----------	1	
- 36		CABLE ASSY ACTUATOR TO CONTROLLER AMPLIFIER CABLE -------	NP	
	28326-0009	CONNECTOR ATTACHES TO ACTUATOR ----------	1	
	S1640-6	HOUSING PIN ATTACHES TO CONTROLLER AMPLIFIER CABLE ----	1	
		CABLE ASSY CONTROLLER AMPLIFIER TO TURN COORDINATOR -----	1	
	28336	CONNECTOR ATTACHES TO CONTROLLER AMPLIFIER ARC ----	1	
	50328-0002	CONNECTOR ATTACHES TO TURN COORDINATOR ARC --------	1	
		NOTE REFER TO THE 337 PARTS CATALOG FOR VACUUM HOSES AND FITTINGS		

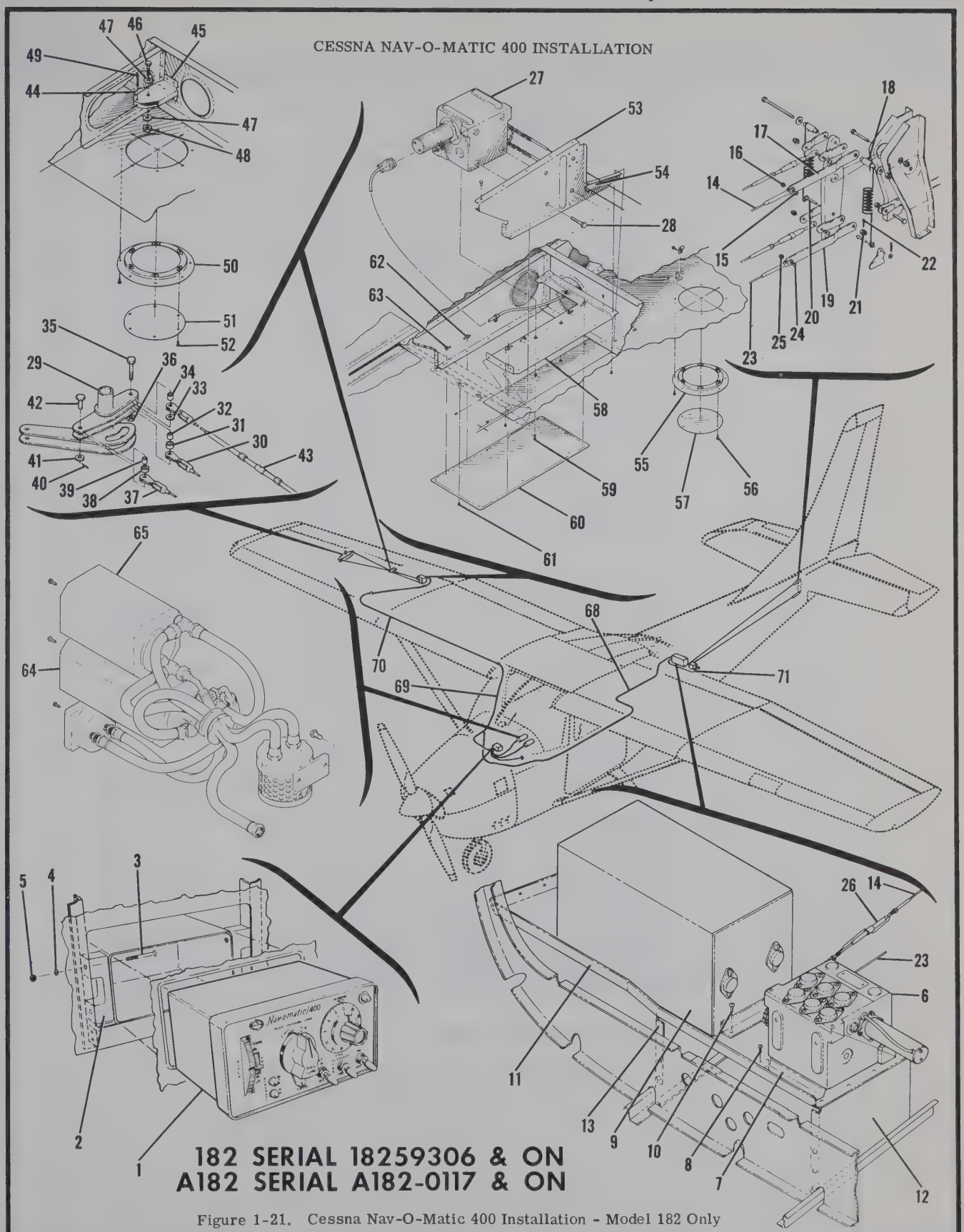

Figure 1-21. Cessna Nav-O-Matic 400 Installation - Model 182 Only

FIGURE AND INDEX NO.	PART NUMBER	DESCRIPTION 1 2 3 4 5 6 7	UNITS PER ASSY	USABLE ON CODE
1-21-		CESSNA NAV-O-MATIC 400 INSTALLATION 182 MODELS ONLY -------	NP	
		ONLY		
- 1	35670-1014	CONTROLLER AMPLIFIER TYPE C-520B ARC ----------	1	
		ATTACHING PARTS		
- 2	C713739-1	SPACER ----------	2	
- 3	AN5C7-632R20	SCREW ----------	4	
- 4	AN960-6	WASHER ----------	4	
- 5	NAS679A06	NUT ----------	4	
		---*---		
	C713750-1	PLACARD ASSY NOT SHOWN MOUNTED ABOVE AIRSPEED -------	1	
		INDICATOR		
	S1360-10	CIRCUIT BREAKER ----------	1	
- 6	26360-0000	ACTUATOR - ELEVATOR TYPE PA-510A ARC ----------	1	
	38144-0080	SHEAR PIN 80 INCH POUNDS ----------	1	
		ATTACHING PARTS		
	AN3-4A	BOLT ----------	4	
		---*---		
- 7	C770698-1	MOUNTING BRACKET ----------	1	
		ATTACHING PARTS		
- 8	AN520-10R6	SCREW ----------	4	
		---*---		
- 9	35910-1014	COMPUTER AMPLIFIER TYPE CA-520B ARC ----------	1	
		ATTACHING PARTS		
- 10	AN520-10R6	SCREW ----------	4	
		---*---		
- 11	C77C699-1	SHELF ASSY ----------	1	
- 12	C77C701-1	BULKHEAD ----------	1	
- 13	C77C701-2	BULKHEAD ----------	1	
- 14	C77C702-3	CABLE ASSY ----------	1	
		ATTACHING PARTS		
- 15	MS525-10R9	SCREW ----------	1	
- 16	NAS679A3	NUT ----------	1	
		---*---		
- 17	1260442-2	LINK ----------	1	
		ATTACHING PARTS		
- 18	C77C700-4	SPACER ----------	1	
		---*---		
- 19	1260442-1	LINK ----------	1	
		ATTACHING PARTS		
- 20	AN24-15	BOLT ----------	1	
- 21	AN320-4	NUT ----------	1	
- 22	MS24665-134	COTTER PIN ----------	1	
		---*---		
- 23	C77C702-1	CABLE & CHAIN ASSY ----------	1	
		ATTACHING PARTS		
- 24	AN525-10R9	SCREW ----------	1	
- 25	MS20365-1032C	NUT ----------	1	
- 26	AN155-16S	BARREL ----------	1	
		---*---		
- 27	26360-0100	ACTUATOR - AILERON TYPE PA-510A ARC ----------	1	
		ATTACHING PARTS		
- 28	AN3-4A	BOLT ----------	4	
		---*---		
- 29	076C705-1	BELLCRANK ASSY ----------	1	
- 30	1200182-2	CABLE ASSY ----------	1	
		ATTACHING PARTS		
- 31	NAS42DD8-12	SPACER ----------	1	
- 32	C760117-2	BUSHING ----------	1	
- 33	AN960-416	WASHER ----------	1	
- 34	C760117-1	BUSHING ----------	1	
- 35	AN3-11A	BOLT ----------	1	
- 36	NAS679A3	NUT ----------	1	

CONTINUED ON NEXT PAGE

FIGURE AND INDEX NO.	PART NUMBER	DESCRIPTION 1 2 3 4 5 6 7	UNITS PER ASSY	USABLE ON CODE
1-21- 37	1200182-1	CHAIN & CABLE ASSY	1	
		ATTACHING PARTS		
- 38	NAS42DD8-12	SPACER	1	
- 39	0760117-2	BUSHING	1	
- 40	MS24665-285	COTTER PIN	1	
- 41	AN960-10L	WASHER	1	
- 42	MS20392-2-15	PIN	1	
		---*---		
- 43	AN155B16S	BARREL	1	
- 44	S378-3L	PULLEY	1	
		ATTACHING PARTS		
- 45	1200183-1	BRACKET	1	
- 46	AN4-10A	BOLT	1	
- 47	AN960-416L	WASHER	2	
- 48	NAS679A4	NUT	1	
- 49	MS20365-132	COTTER PIN	1	
		---*---		
- 50	S226-5F	DOUBLER	1	
- 51	S225-4F	COVER	1	
		ATTACHING PARTS		
- 52	S1022F8-8	SCREW	6	
		---*---		
- 53	1200167-1	RIB ASSEMBLY	1	
- 54		GROMMET BULK ITEM - 3.90 INCHES LONG	1	
- 55	S226-5F	DOUBLER	1	
- 56	S225-4F	COVER	1	
		ATTACHING PARTS		
- 57	S1022Z8-8	SCREW	6	
		---*---		
- 58	1200169-1	DOUBLER ASSY	1	
- 59	AN515-10R9	SCREW	2	
- 60	1200168-1	COVER	1	
		ATTACHING PARTS		
- 61	AN525-832R7	SCREW	14	
		---*---		
- 62	NAS697A08	NUTPLATE	6	
- 63	NAS696A08	NUTPLATE	3	
- 64	3C475-0100	GYRO - HORIZON	1	
		ATTACHING PARTS		
- 65	AN507-1032R6	SCREW	4	
		---*---		
- 66	3C370-0100	GYRO - DIRECTIONAL	1	
		ATTACHING PARTS		
- 67	AN515-6R10	SCREW	3	
		---*---		
		CABLE ASSY CONTROL UNIT TO COMPUTER	NP	
- 68	31683-0020	CONNECTOR ARC	2	
		CABLE ASSY CONTROL UNIT TO VERTICAL GYRO	NP	
	28371-0007	CONNECTOR ATTACHES TO CONTROL UNIT ARC	1	
	28326-0007	CONNECTOR ATTACHES TO VERTICAL GYRO ARC	1	
		CABLE ASSY CONTROL UNIT TO DIRECTIONAL GYRO	NP	
	28371-0005	CONNECTOR ATTACHES TO CONTROL UNIT ARC	1	
	28326-0005	CONNECTOR ATTACHES TO DIRECTIONAL GYRO ARC	1	
- 69		CABLE ASSY COMPUTER TO ROLL ACTUATOR CABLE	NP	
	28371-0007	CONNECTOR ATTACHES TO COMPUTER ARC	1	
	28326-0009	CONNECTOR ATTACHES TO ROLL ACTUATOR CABLE ARC	1	
- 70		CABLE ASSY ROLL ACTUATOR TO COMPUTER CABLE	NP	
	28326-0009	CONNECTOR ATTACHES TO ROLL ACTUATOR ARC	1	
	28505-0009	CONNECTOR ATTACHES TO COMPUTER CABLE ARC	1	
- 71		CABLE ASSY COMPUTER TO PITCH ACTUATOR	NP	
	28326-0009	CONNECTOR ATTACHES TO COMPUTER ARC	1	
	28505-0009	CONNECTOR ATTACHES TO PITCH ACTUATOR ARC	1	

NOTE

REFER TO THE 182 PARTS CATALOG
FOR VACUUM HOSES AND FITTINGS

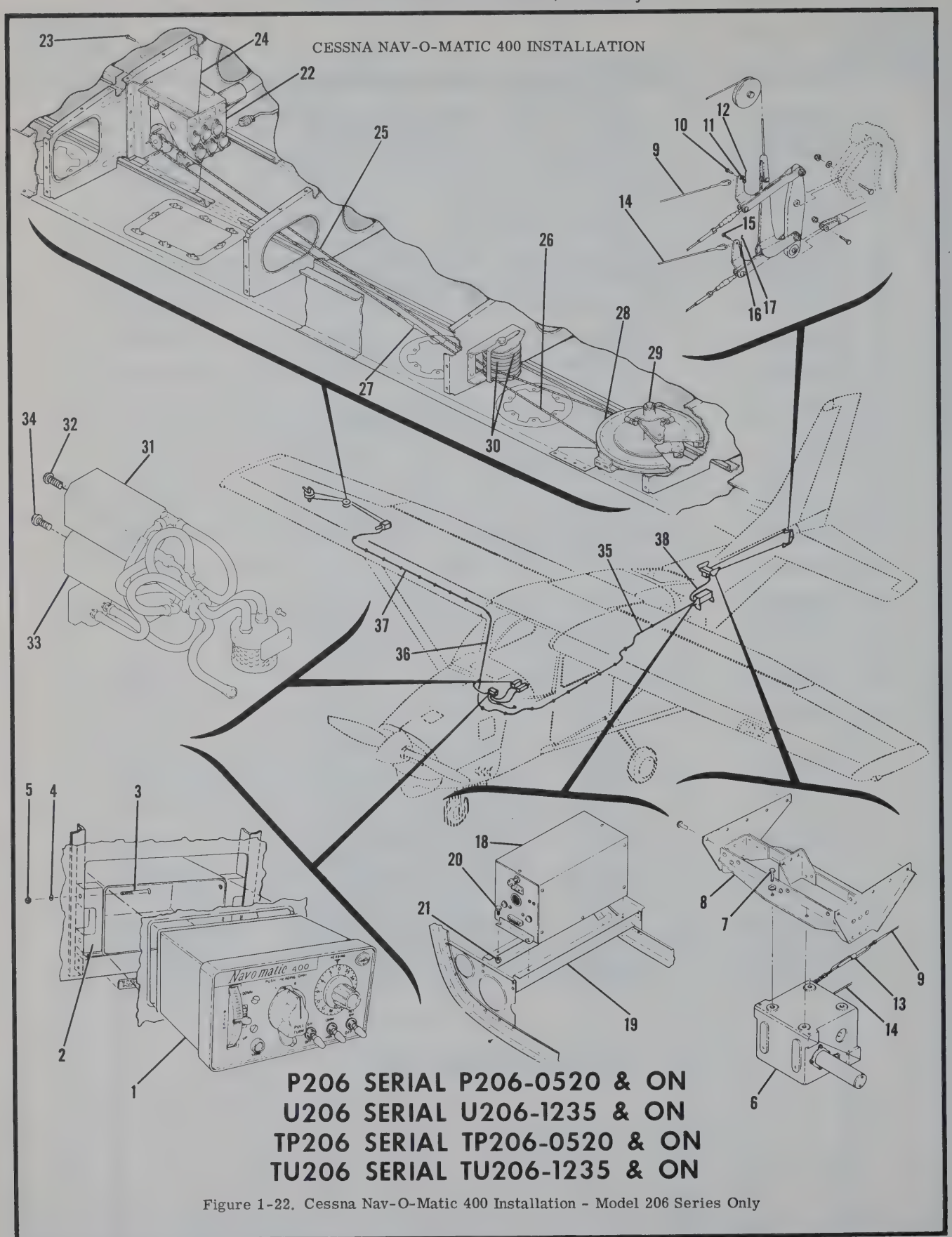

Figure 1-22. Cessna Nav-O-Matic 400 Installation - Model 206 Series Only

FIGURE AND INDEX NO.	PART NUMBER	DESCRIPTION 1 2 3 4 5 6 7	UNITS PER ASSY	USABLE ON CODE
1-22-		CESSNA NAV-O-MATIC 400 INSTALLATION 207 SERIES ONLY	NP	
- 1	35670-1014	CONTROLLER AMPLIFIER TYPE C-520B ARC	1	
		ATTACHING PARTS		
- 2	C713739-1	SPACER	2	
- 3	AN5C7-632R20	SCREW	4	
- 4	AN960-6	WASHER	4	
- 5	NAS697A06	NUT	4	
		---*---		
	C713750-6	PLACARD ASSY MOUNTED ON LH INSTRUMENT PANEL COVER	1	
	S1360-10	CIRCUIT BREAKER	1	
- 6	26360-0100	ACTUATOR-ELEVATOR TYPE PA-510A ARC	1	
	38144-0060	SHEAR PIN 60 INCH POUNDS RED ARC	1	
		ATTACHING PARTS		
- 7	AN3-4A	BOLT	4	
- 8	126C651-1	BRACKET ASSY	1	
		---*---		
- 9	C770702-12	CABLE ASSY	1	
		ATTACHING PARTS		
- 10	AN23-10	BOLT	1	
- 11	AN310-3	NUT	1	
- 12	MS24665-134	PIN-COTTER	1	
- 13	AN155-16S	BARREL	1	
		---*---		
- 14	C770702-14	CABLE & CHAIN ASSY	1	
		ATTACHING PARTS		
- 15	AN23-10	BOLT	1	
- 16	AN310-3	NUT	1	
- 17	MS24665-134	PIN-COTTER	1	
		---*---		
- 18	35910-0014	COMPUTER AMPLIFIER TYPE CA520B ARC	1	
		ATTACHING PARTS		
- 19	1260652-1	BRACKET ASSY	1	
- 20	AN515-8R8	SCREW	4	
	AN960D8L	WASHER	4	
- 21	MS21045L08	NUT	4	
		---*---		
- 22	26360-0100	ACTUATOR-AILERON TYPE PA510A ARC	1	
	38144-0100	SHEAR PIN 100 INCH POUNDS GOLD	1	
		ATTACHING PARTS		
- 23	AN3-4A	BOLT	4	
		---*---		
- 24	122C091-1	BRACKET	1	
- 25		CABLE & CHAIN ASSY	1	
		ATTACHING PARTS		
	AN21-9	BOLT	1	
	AN320-1	NUT	1	
	MS24665-5	PIN-COTTER	1	
		---*---		
- 26	1270049-10	CABLE ASSY	1	
		ATTACHING PARTS		
- 27	AN155B16S	BARREL	1	
	AN21-9	BOLT	1	
	AN320-1	NUT	1	
	MS24665-5	PIN-COTTER	1	
		---*---		
- 28	126C095-1	BELLCRANK ASSY	1	
		ATTACHING PARTS		
- 29	AN4-51A	BOLT	1	
	0522629-1	WASHER AT LOWER END OF BELLCRANK	1	
	NAS679A4	NUT	1	
		---*---		
- 30	MS20220-2	PULLEY	2	

CONTINUED ON NEXT PAGE

FIGURE AND INDEX NO.	PART NUMBER	DESCRIPTION 1 2 3 4 5 6 7	UNITS PER ASSY	USABLE ON CODE
1-22- 31	37570-0001	GYRO-HORIZON TYPE G519A-1 ARC	1	
		ATTACHING PARTS		
- 32	AN520-6R10	SCREW	4	
		---*---		
- 33	30370-0100	GYRO-DIRECTIONAL TYPE G-520A ARC	1	
		ATTACHING PARTS		
- 34	AN520-6R10	SCREW	3	
		---*---		
- 35		CABLE ASSY CONTROL UNIT TO COMPUTER	NP	
	31683-0020	CONNECTOR ARC	2	
		CABLE ASSY CONTROL UNIT TO VERTICAL GYRO	NP	
	28371-0007	CONNECTOR ATTACHES TO CONTROL UNIT ARC	1	
	28326-0007	CONNECTOR ATTACHES TO VERTICAL GYRO	1	
		CABLE ASSY CONTROL UNIT TO DIRECTIONAL GYRO	NP	
	28371-0005	CONNECTOR ATTACHES TO CONTROL UNIT ARC	1	
	28326-0005	CONNECTOR ATTACHES TO DIRECTIONAL GYRO ARC	1	
- 36		CABLE ASSY COMPUTER TO ROLL ACTUATOR CABLE	NP	
	28371-0007	CONNECTOR ATTACHES TO COMPUTER ARC	1	
	28326-0009	CONNECTOR ATTACHES TO ROLL ACTUATOR CABLE	1	
- 37		CABLE ASSY ROLL ACTUATOR TO COMPUTER CABLE	NP	
	28505-0009	CONNECTOR ATTACHES TO COMPUTER CABLE ARC	1	
	28326-0009	CONNECTOR ATTACHES TO ROLL ACTUATOR ARC	1	
- 38		CABLE ASSY COMPUTER TO PITCH ACTUATOR ARC	NP	
	28371-0009	CONNECTOR ATTACHES TO COMPUTER ARC	1	
	28326-0009	CONNECTOR ATTACHES TO PITCH ACTUATOR ARC	1	
		NOTE. REFER TO THE 207 PARTS CATALOG FOR VACUUM HOSES AND FITTINGS		

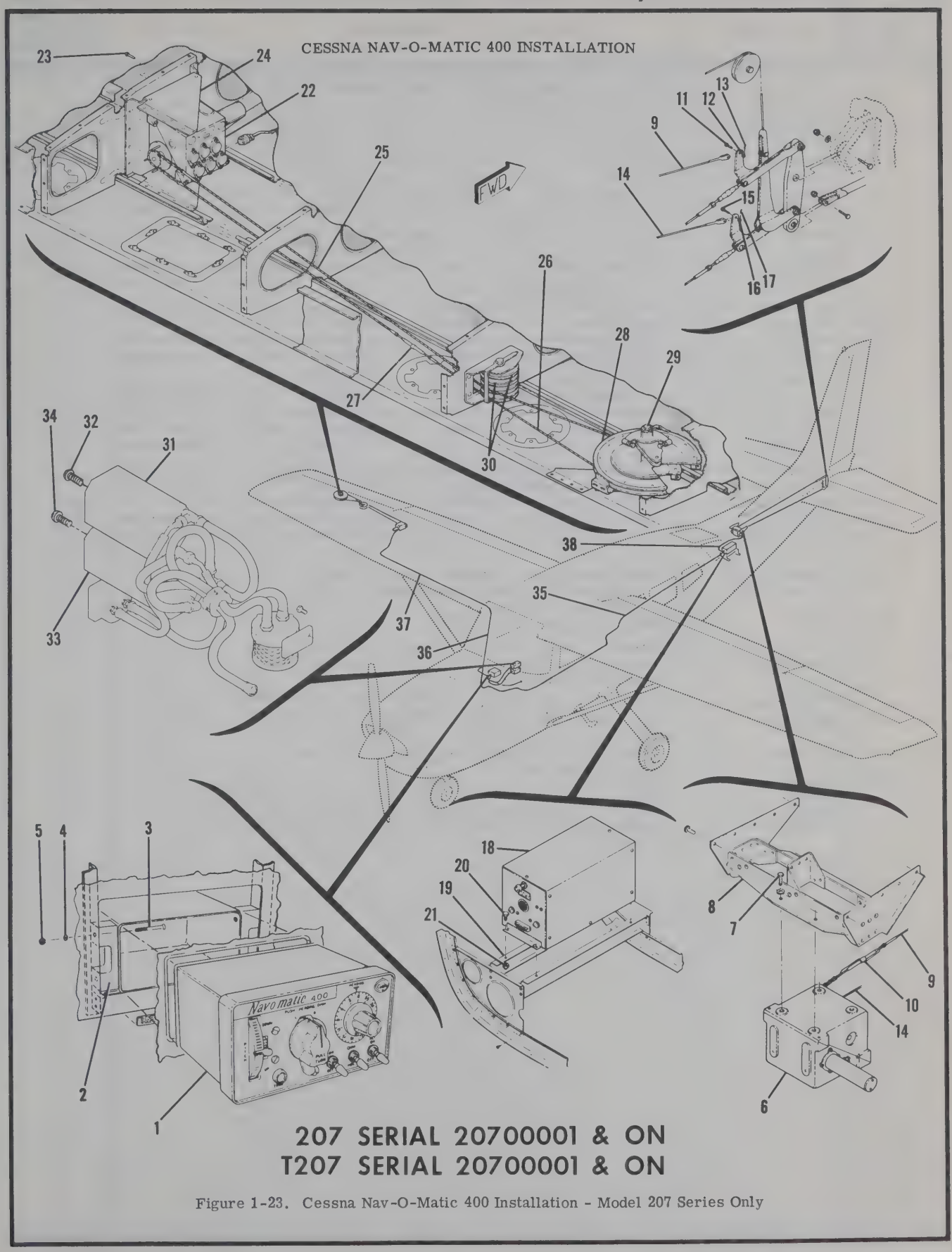

207 SERIAL 20700001 & ON
T207 SERIAL 20700001 & ON

Figure 1-23. Cessna Nav-O-Matic 400 Installation - Model 207 Series Only

FIGURE AND INDEX NO.	PART NUMBER	DESCRIPTION 1 2 3 4 5 6 7	UNITS PER ASSY	USABLE ON CODE
1-23-		CESSNA NAV-O-MATIC 400 INSTALLATION 207 SERIES ONLY --------	NP	
- 1	35670-1014	CONTROLLER AMPLIFIER TYPE C-520B ARC ----------	1	
		ATTACHING PARTS		
- 2	C713739-1	SPACER ----------	2	
- 3	AN507-632R20	SCREW ----------	4	
- 4	AN960-6	WASHER ----------	4	
- 5	NAS679A06	NUT ----------	4	
		---*---		
- 6	26360-0200	ACTUATOR ASSY TYPE PA510A ARC ----------	1	
	38144-0060	SHEAR PIN 60 INCH POUNDS RED ----------	1	
		ATTACHING PARTS		
- 7	AN3-4A	BOLT ----------	4	
		---*---		
- 8	1260651-1	BRACKET ASSY ----------	1	
- 9	C770762-12	CABLE ASSY ----------	1	
		ATTACHING PARTS		
- 10	AN155-16S	BARREL ----------	1	
- 11	AN23-10	BOLT ----------	1	
- 12	AN310-3	NUT ----------	1	
- 13	MS24665-134	PIN-COTTER ----------	1	
		---*---		
- 14	C770702-14	CABLE & CHAIN ASSY ----------	1	
		ATTACHING PARTS		
- 15	AN23-10	BOLT ----------	1	
- 16	AN310-3	NUT ----------	1	
- 17	MS24665-134	PIN-COTTER ----------	1	
		---*---		
- 18	35910-1014	COMPUTER-AMPLIFIER TYPE CA-520B ARC ----------	1	
		ATTACHING PARTS		
- 19	1260652-1	BRACKET ASSY ----------	1	
- 20	AN515-8R8	SCREW ----------	4	
	AN960D8L	WASHER ----------	4	
- 21	MS21045L08	NUT ----------	4	
		---*---		
- 22	26360-0100	ACTUATOR ASSY TYPE PA510A ARC ----------	1	
	38144-0100	SHEAR PIN 100 INCH POUNDS GOLD ----------	1	
		ATTACHING PARTS		
- 23	AN3-4A	BOLT ----------	4	
		---*---		
- 24	1220091-1	BRACKET ----------	1	
- 25	1270049-9	CHAIN & CABLE ASSY ----------	1	
		ATTACHING PARTS		
	AN21-9	BOLT ----------	1	
	AN320-1	NUT ----------	1	
	MS24665-5	PIN-COTTER ----------	1	
		---*---		
- 26	1270049-10	CABLE ASSY ----------	1	
		ATTACHING PARTS		
- 27	AN155B16S	BARREL ----------	1	
	AN21-9	BOLT ----------	1	
	AN320-1	NUT ----------	1	
	MS24665-5	PIN-COTTER ----------	1	
		---*---		

CONTINUED ON NEXT PAGE

FIGURE AND INDEX NO.	PART NUMBER	DESCRIPTION 1 2 3 4 5 6 7	UNITS PER ASSY	USABLE ON CODE
1-23- 28	1260095-1	BELLCRANK ASSY	1	
		ATTACHING PARTS		
- 29	AN4-51A	BOLT	1	
	0522629-1	WASHER AT LOWER END OF BELLCRANK	1	
	NAS679A4	NUT	1	
		---*---		
- 30	MS20220-2	PULLEY	2	
- 31	37570-0001	GYRO-HORIZON TYPE G-519A-1 ARC	1	
		ATTACHING PARTS		
- 32	AN520-6R10	SCREW	4	
		---*---		
- 33	30370-0100	GYRO-DIRECTIONAL TYPE G-520A	1	
		ATTACHING PARTS		
- 34	AN520-6R10	SCREW	4	
		---*---		
- 35		CABLE ASSY CONTROL UNIT TO COMPUTER	NP	
	31683-0020	CONNECTOR ARC	2	
		CABLE ASSY CONTROL UNIT TO VERTICAL GYRO	NP	
	28371-0007	CONNECTOR ATTACHES TO CONTROL UNIT ARC	1	
	28326-0007	CONNECTOR ATTACHES TO VERTICAL GYRO	1	
		CABLE ASSY CONTROL UNIT TO DIRECTIONAL GYRO	NP	
	28371-0005	CONNECTOR ATTACHES TO CONTROL UNIT ARC	1	
	28326-0005	CONNECTOR ATTACHES TO DIRECTIONAL GYRO	1	
- 36		CABLE ASSY COMPUTER TO ROLL ACTUATOR CABLE	NP	
	28371-0007	CONNECTOR ATTACHES TO COMPUTER ARC	1	
	28326-0009	CONNECTOR ATTACHES TO ROLL ACTUATOR CABLE ARC	1	
- 37		CABLE ASSY ROLL ACTUATOR TO COMPUTER CABLE ARC	NP	
	28505-0009	CONNECTOR ATTACHES TO COMPUTER CABLE ARC	1	
	28326-0009	CONNECTOR ATTACHES TO ROLL ACTUATOR ARC	1	
- 38		CABLE ASSY COMPUTER TO PITCH ACTUATOR	NP	
	28371-0009	CONNECTOR ATTACHES TO COMPUTER ARC	1	
	28326-0009	CONNECTOR ATTACHES TO PITCH ACTUATOR ARC	1	

NOTE. REFER TO THE 207 PARTS CATALOG FOR VACUUM HOSES AND FITTINGS

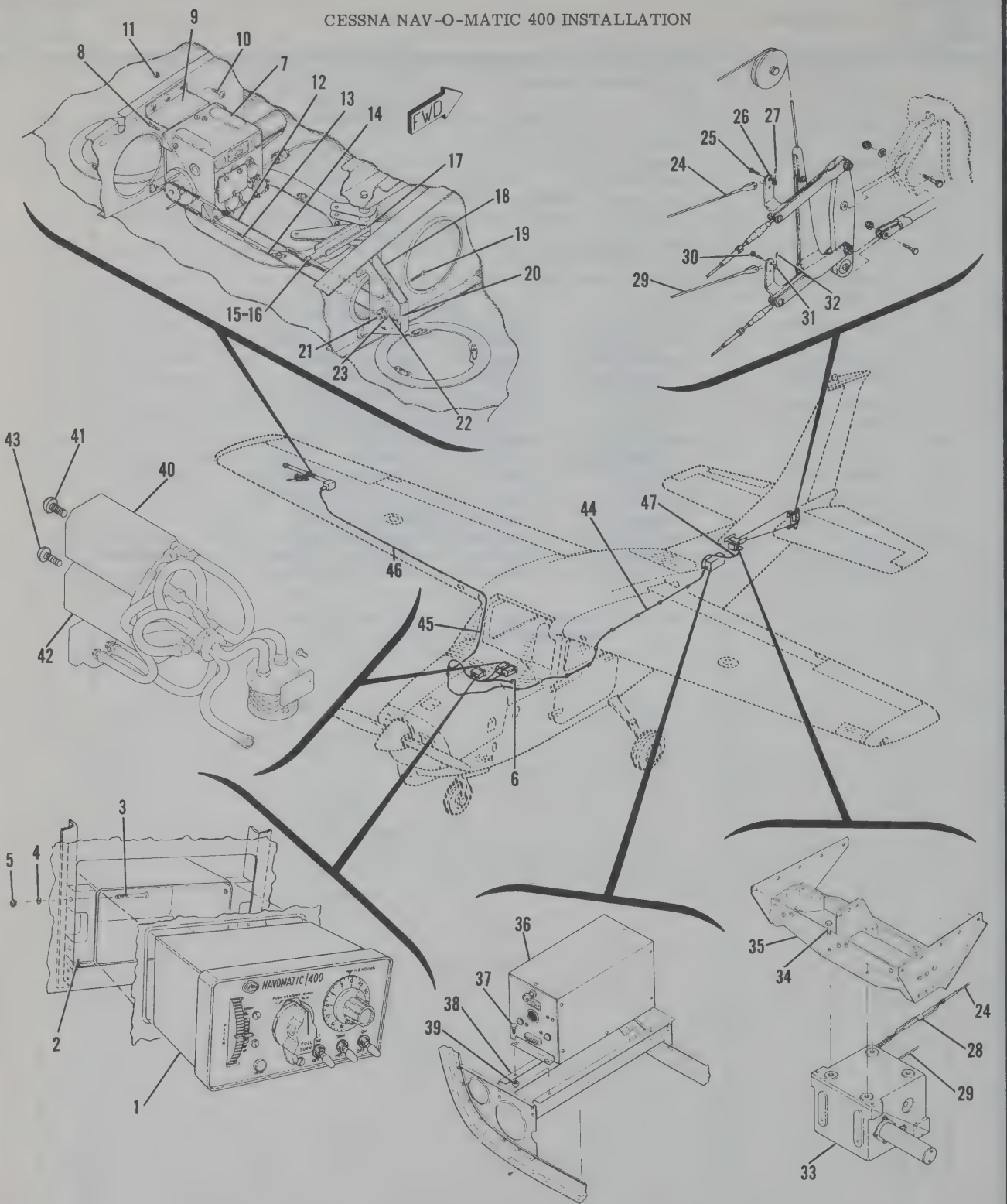

210 SERIAL 21059062 & ON
T210 SERIAL T210-0393 & ON

Figure 1-24. Cessna Nav-O-Matic 400 Installation - Model 210 Series Only

FIGURE AND INDEX NO.	PART NUMBER	DESCRIPTION 1 2 3 4 5 6 7	UNITS PER ASSY	USABLE ON CODE
1-24-		CESSNA NAV-O-MATIC 400 INSTL 210 & T210 SERIES ONLY	NP	
- 1	35670-1014	CONTROLLER AMPLIFIER TYPE C-520B ARC	1	
		ATTACHING PARTS		
- 2	0713739-1	SPACER	2	
- 3	AN507-632R20	SCREW	4	
- 4	AN960-6	WASHER	4	
- 5	NAS697A06	NUT	4	
		---*---		
	0713750-4	PLACARD ASSY MOUNTED ON LH INSTRUMENT PANEL COVER	1	
- 6	S1360-10	CIRCUIT BREAKER	1	
- 7	26360-0100	ACTUATOR-AILERON TYPE PA-510A ARC	1	
	38144-0060	SHEAR PIN 60 INCH POUNDS-GOLD ARC	1	
		ATTACHING PARTS		
- 8	AN3-4A	BOLT	4	
	AN960-10	WASHER	4	
		---*---		
- 9	1200027-1	SUPPORT	1	
		ATTACHING PARTS		
- 10	AN520-10R6	SCREW	6	
- 11	NAS679A3	NUT	6	
		---*---		
- 12	1200735-1	CHAIN & CABLE ASSY	1	
- 13	AN155-16S	BARREL	1	
- 14	1200735-2	CABLE ASSY	1	
		ATTACHING PARTS		
- 15	MS20392-2C9	PIN	1	
- 16	MS24665-132	PIN-COTTER	1	
		---*---		
- 17	1221087-12	BELLCRANK	1	
- 18	1200016-1	PULLEY SUPPORT	1	
- 19	MS24665-285	PIN-COTTER	3	
- 20	MS20220-1	PULLEY	1	
		ATTACHING PARTS		
- 21	AN5-11A	BOLT	1	
- 22	AN960-516	WASHER	1	
- 23	NAS679A5	NUT	1	
		---*---		
- 24	0770702-12	CABLE ASSY	1	
		ATTACHING PARTS		
- 25	AN23-10	BOLT	1	
- 26	AN310-3	NUT	1	
- 27	MS24665-134	PIN-COTTER	1	
- 28	AN155-16S	BARREL	1	
		---*---		
- 29	0770702-14	CHAIN & CABLE ASSY	1	
		ATTACHING PARTS		
- 30	AN23-10	BOLT	1	
- 31	AN310-3	NUT	1	
- 32	MS24665-134	PIN-COTTER	1	
		---*---		
- 33	26360-0100	ACTUATOR-ELEVATOR TYPE PA-510A ARC	1	
	38144-0060	SHEAR PIN 60 INCH POUNDS GOLD ARC	1	
		ATTACHING PARTS		
- 34	AN3-4A	BOLT	4	
- 35	1260651-1	BRACKET ASSY	1	
		---*---		
- 36	35910-1014	COMPUTER AMPLIFIER TYPE CA-520B ARC	1	
		ATTACHING PARTS		
- 37	AN3-3A	BOLT	4	
- 38	1260652-1	BRACKET ASSY	1	
- 39	NAS679A3	NUT	4	
		---*---		

CONTINUED ON NEXT PAGE

FIGURE AND INDEX NO.	PART NUMBER	DESCRIPTION 1 2 3 4 5 6 7	UNITS PER ASSY	USABLE ON CODE
1-24- 40	37570-0001	GYRO-HORIZON TYPE G-519A-1 ARC	1	
		ATTACHING PARTS		
- 41	AN520-6R10	SCREW	4	
		---*---		
- 42	3C370-0100	GYRO-DIRECTIONAL TYPE G-520A ARC	1	
		ATTACHING PARTS		
- 43	AN520-6R10	SCREW	3	
		---*---		
- 44		CABLE ASSY CONTROL UNIT TO COMPUTER	NP	
	31683-0020	CONNECTOR ARC	2	
		CABLE ASSY CONTROL UNIT TO VERTICAL GYRO	NP	
	28371-0007	CONNECTOR ATTACHES TO CONTROL UNIT ARC	1	
	28326-0007	CONNECTOR ATTACHES TO VERTICAL GYRO ARC	1	
		CABLE ASSY CONTROL UNIT TO DIRECTIONAL GYRO	NP	
	28326-0005	CONNECTOR ATTACHES TO DIRECTIONAL GYRO ARC	1	
	28371-0005	CONNECTOR ATTACHES TO CONTROL UNIT ARC	1	
- 45		CABLE ASSY COMPUTER TO ROLL ACTUATOR CABLE	NP	
	28371-0007	CONNECTOR ATTACHES TO COMPUTER ARC	1	
	28326-0009	CONNECTOR ATTACHES TO ROLL ACTUATOR CABLE ARC	1	
- 46		CABLE ASSY ROLL ACTUATOR TO COMPUTER CABLE	NP	
	28326-0009	CONNECTOR ATTACHES TO ROLL ACTUATOR	1	
	28505-0009	CONNECTOR ATTACHES TO COMPUTER CABLE	1	
- 47		CABLE ASSY COMPUTER TO PITCH ACTUATOR	NP	
	28371-0009	CONNECTOR ATTACHES TO COMPUTER	1	
	28326-0009	CONNECTOR ATTACHES TO PITCH ACTUATOR	1	
		NOTE. REFER TO 210 PARTS CATALOG FOR VACUUM HOSES AND FITTING		

CESSNA NAV-O-MATIC 400 INSTALLATION

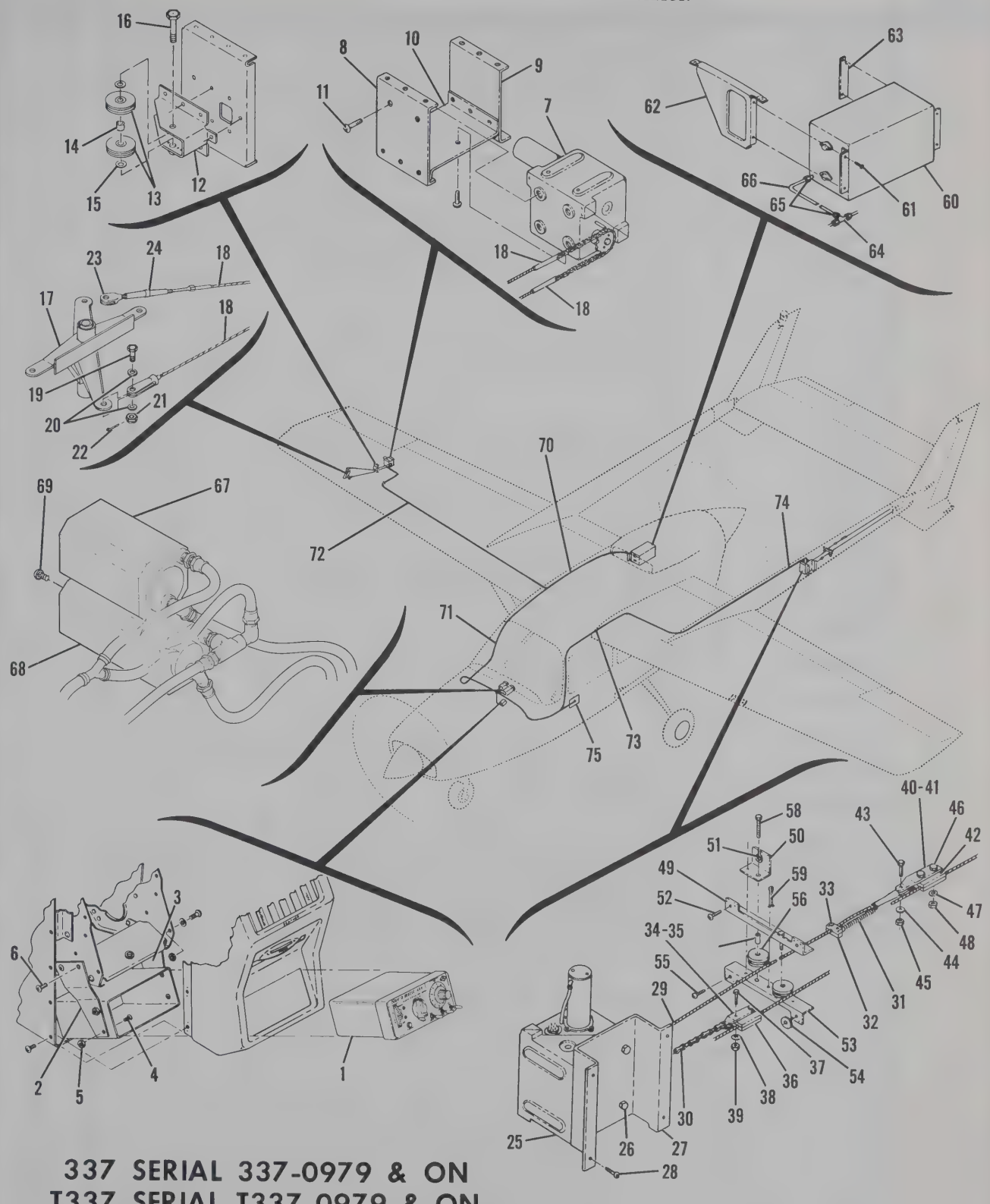

337 SERIAL 337-0979 & ON
T337 SERIAL T337-0979 & ON

Figure 1-25. Cessna Nav-O-Matic 400 Installation - Models 337 & T337 Only

FIGURE AND INDEX NO.	PART NUMBER	DESCRIPTION 1 2 3 4 5 6 7	UNITS PER ASSY	USABLE ON CODE
1-25-		CESSNA NAV-O-MATIC 400 INSTALLATION 337 & T337 ONLY	NP	
- 1	35670-1028	CONTROLLER-AMPLIFIER 28 VOLT TYPE C-5208 ARC	1	
		ATTACHING PARTS		
- 2	1470066-23	BRACKET-CONTROLLER LH	1	
- 3	1470066-24	BRACKET-CONTROLLER RH	1	
- 4	AN507-632R6	SCREW	4	
- 5	NAS679A06	NUT	4	
- 6	AN515-8R6	SCREW STANDARD EQUIPMENT	4	
		---*---		
- 7	29510-0001	ACTUATOR ASSY-AILERON TYPE PA-511A-28 VOLT ARC	1	
	38144-0060	SHEAR PIN 30 INCH POUNDS RED ARC	1	
		ATTACHING PARTS		
- 8	1422023-1	PLATE-40 PER CENT CHORD TIE	1	
- 9	1422023-2	PLATE-50 PER CENT CHORD TIE	1	
- 10	1422023-3	PLATE-ACTUATOR SUPPORT	1	
	AN960-10	WASHER	4	
- 11	AN520-10R10	SCREW	4	
		---*---		
- 12	1560111-1	BRACKET ASSY-PULLEY	1	
- 13	S378-1	PULLEY	1	
		ATTACHING PARTS		
- 14	NAS43-3-15	SPACER	1	
- 15	AN960-10L	WASHER-LOCK	2	
- 16	AN3-12A	BOLT	1	
		---*---		
- 17	1462000-2	BELLCRANK ASSY RH-AILERON	1	
- 18	1560008-2	CHAIN & CABLE ASSY	1	
		ATTACHING PARTS		
- 19	AN3-7	BOLT	2	
- 20	AN960-C10L	WASHER	4	
- 21	AN310-C3	NUT	2	
- 22	MS24665-134	PIN-COTTER	2	
- 23	AN161-16LS	FORK	1	
- 24	AN155-16S	BARREL-TURNBUCKLE	1	
		---*---		
- 25	29510-0401	ACTUATOR ASSY-ELEVATOR TYPE PA-511A-4-28 VOLT ARC	1	
	38144-0030	SHEAR PIN 30 INCH POUNDS GREEN ARC	1	
		ATTACHING PARTS		
- 26	AN520-10R10	SCREW	4	
		---*---		
- 27	1470066-26	BRACKET ASSY	1	
		ATTACHING PARTS		
- 28	AN525-832R8	SCREW	4	
		---*---		
- 29	1560008-1	CHAIN & CABLE ASSY	1	
- 30	1560008-6	CHAIN 14 INCHES REQD	AR	
- 31	1470066-54	SPRING	1	
- 32	1460326-1	BLOCK-STOP	2	
		ATTACHING PARTS		
- 33	AN520-10R6	SCREW	2	
		---*---		
- 34	1470066-33	LINK	1	
- 35	1470066-32	LINK	1	
- 36	0861520-1	CLAMP HALF	2	
		ATTACHING PARTS		
- 37	AN3-10A	BOLT	2	
- 38	AN960-10	WASHER	2	
- 39	NAS679A3	NUT	2	
		---*---		

CONTINUED ON NEXT PAGE

FIGURE AND INDEX NO.	PART NUMBER	DESCRIPTION 1 2 3 4 5 6 7	UNITS PER ASSY	USABLE ON CODE
1-25- 40	147C066-34	LINK	1	
- 41	147C066-35	LINK	1	
- 42	0861520-1	CLAMP HALF	2	
		ATTACHING PARTS		
- 43	AN3-6	BOLT	1	
- 44	AN960-10	WASHER	1	
- 45	NAS679A3	NUT	1	
- 46	AN3-10A	BOLT	2	
- 47	AN960-10	WASHER	2	
- 48	NAS679A3	NUT	2	
		---*---		
- 49	147C066-14	BRACKET ASSY-PULLEY	1	
- 50	147C066-55	CLIP	1	
- 51	S338-1	FAIRLEAD	2	
	S339-1	CLIP	1	
		ATTACHING PARTS		
- 52	AN520-10R10	SCREW	2	
		---*---		
- 53	147C066-12	BRACKET ASSY-PULLEY	1	
		ATTACHING PARTS		
- 54	S1450-3-10.032	WASHER	2	
- 55	AN520-10R10	SCREW	2	
		---*---		
- 56	S394	PULLEY	2	
		ATTACHING PARTS		
- 57	0411783	BUSHING	2	
- 58	AN3-7A	BOLT	2	
- 59	MS24665-287	PIN-COTTER	2	
		---*---		
- 60	35910-1228	COMPUTER AMPLIFIER	1	
		ATTACHING PARTS		
- 61	AN3-3A	BOLT	4	
		---*---		
- 62	1470066-50	BRACKET ASSY-COMPUTER FWD	1	
- 63	147C066-58	BRACKET ASSY-COMPUTER AFT	1	
	MS35459-14	GROMMET USED WITH TURBO SYSTEM ONLY	1	
- 64	S1137-1	TEE	1	
- 65	S1130-1	NUT	2	
	S1131-1	INSERT	2	
- 66	S1071-1-36.0	LINE BULK ITEM	AR	
- 67	3757C-0001	GYRO-HORIZON TYPE G-519A-1 ARC	1	
		ATTACHING PARTS		
	AN5C78632R10	SCREW	4	
		---*---		
- 68	3C370-0100	GYRO-DIRECTIONAL TYPE G-520A ARC	1	
		ATTACHING PARTS		
- 69	AN5C78632R10	SCREW	3	
		---*---		
- 70		CABLE ASSY CONTROL UNIT TO COMPUTER	NP	
	31683-0020	CONNECTOR ARC	1	
		CABLE ASSY CONTROL UNIT TO VERTICAL GYRO	NP	
	28371-0007	CONNECTOR ATTACHES TO CONTROL UNIT ARC	1	
	28326-0007	CONNECTOR ATTACHES TO VERTICAL GYRO ARC	1	
		CABLE ASSY CONTROL UNIT TO DIRECTIONAL GYRO	NP	
	28371-0005	CONNECTOR ATTACHES TO CONTROL UNIT ARC	1	
	28326-0005	CONNECTOR ATTACHES TO DIRECTIONAL GYRO ARC	1	
- 71		CABLE ASSY COMPUTER TO ROLL ACTUATOR CABLE	NP	
	28371-0007	CONNECTOR ATTACHES TO COMPUTER ARC	1	
	S1641-9	HOUSING SOCKET ATTACHES TO ROLL ACTUATOR CABLE	1	

CONTINUED ON NEXT PAGE

FIGURE AND INDEX NO.	PART NUMBER	DESCRIPTION 1 2 3 4 5 6 7	UNITS PER ASSY	USABLE ON CODE
1-25- 72		CABLE ASSY ROLL ACTUATOR TO COMPUTER CABLE ----------	NP	
	28326-0009	CONNECTOR ATTACHES TO ROLL ACTUATOR ARC ----------	1	
	S1640-9	HOUSING PIN ATTACHES TO COMPUTER CABLE ----------	1	
- 73		CABLE ASSY COMPUTER TO PITCH ACTUATOR CABLE ----------	NP	
	28371-0009	CONNECTOR ATTACHES TO COMPUTER ARC ----------	1	
	S1641-9	HOUSING SOCKET ATTACHES TO PITCH ACTUATOR CABLE -------	1	
- 74		CABLE ASSY PITCH ACTUATOR TO COMPUTER CABLE ----------	NP	
	28326-0009	CONNECTOR ATTACHES TO PITCH ACTUATOR ARC ----------	1	
	S1640-9	HOUSING PIN ATTACHES TO COMPUTER CABLE ----------	1	
- 75	S1360-5	CIRCUIT BREAKER ----------	1	
		NOTE REFER TO THE 337 PARTS CATALOG FOR VACUUM HOSES AND FITTINGS		

VENDOR CRAFTED RADIO EQUIPMENT

SECTION II

TABLE OF CONTENTS

Figure	Equipment	Page
2-1	King KY-95 Radio Installation	2-2
2-2	King KX-160 Radio Installation	2-5
2-3	Narco Mark 12A Radio Installation	2-9
2-4	Narco UGR-2 Glide Slope	2-19

KING KY-95 RADIO INSTALLATION

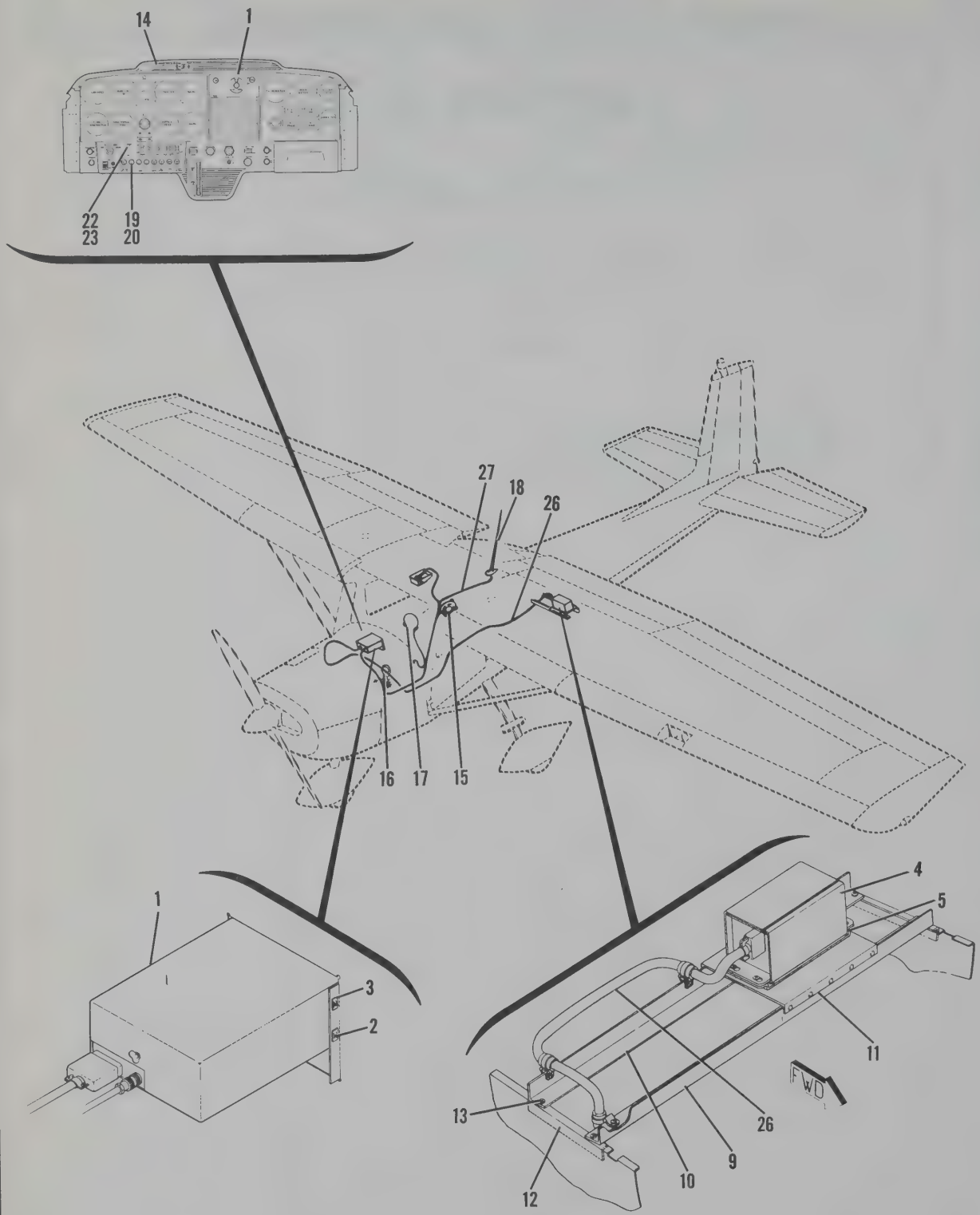

F150 SERIAL F150-0390 & ON

Figure 2-1. King KY-95 Radio Installation (Sheet 1 of 2)

KING KY-95 RADIO INSTALLATION

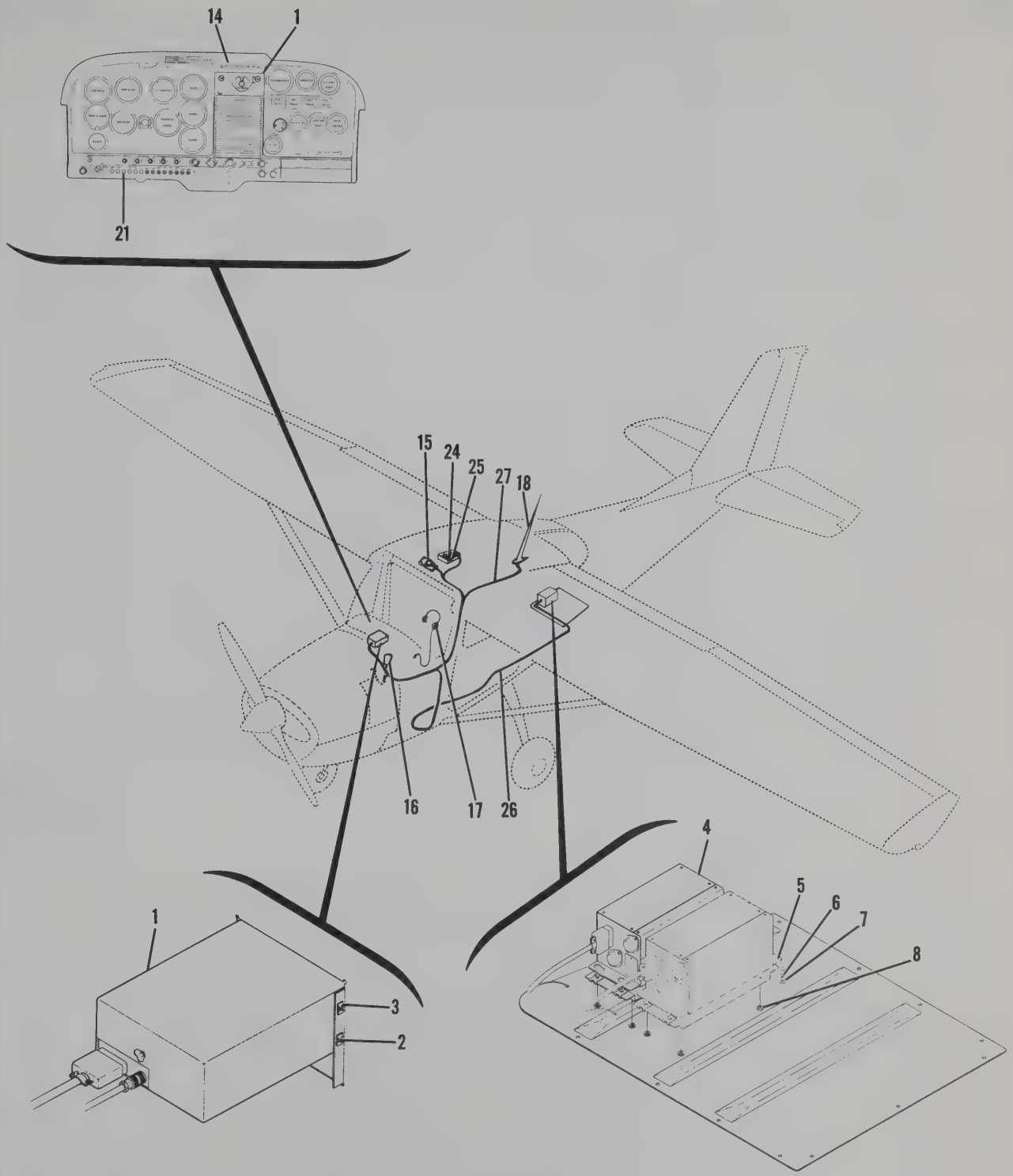

F172 SERIAL F172-0560 & ON
FR172 SERIAL FR172-0061 & ON

Figure 2-1. King KY-95 Radio Installation (Sheet 2 of 2)

FIGURE AND INDEX NO.	PART NUMBER	DESCRIPTION 1 2 3 4 5 6 7	UNITS PER ASSY	USABLE ON CODE
2-1-		RADIO INSTALLATION - KING KY-95E F150, F172 & FR172 ONLY --	NP	
- 1	KY-95E	TRANSCEIVER KG	1	
		ATTACHING PARTS		
- 2	S1021Z6-6	SCREW	4	
	AN960-6L	WASHER	4	
- 3	NAS446-2-3	NUT	4	
		---*---		
- 4	KS-501A	POWER SUPPLY	1	
		ATTACHING PARTS		
- 5	C47-1010-00	MOUNTING PLATE KG	1	
- 6	AN515-8R16	SCREW	4	
- 7	AN936A8	WASHER	4	
- 8	S1648-08-75	NUT	4	
		---*---		
- 9	C411547-1	SUPPORT - RADIO RACK F150 ONLY	1	
- 10	C411547-2	SUPPORT - RADIO RACK F150 ONLY	1	
		ATTACHING PARTS		
- 11	C412012-1	BRACKET	1	
- 12	C412011-1	STIFFENER	2	
- 13	AN515-8R8	SCREW	4	
	NAS679A08	NUT	4	
		---*---		
- 14	SEE FIG 4-1	AUDIO ISOLATION AMPLIFIER & SELECTOR SWITCH INSTALLATION	AR	
- 15	SEE FIG 4-2	SPEAKER INSTALLATION	1	
- 16	SEE FIG 4-3	MICROPHONE INSTALLATION	1	
- 17	SEE FIG 4-4	HEADSET INSTALLATION	1	
- 18	SEE FIG 3-1	VHF ANTENNA INSTALLATION	1	
	SEE FIG 5-1	RADIO COOLING INSTALLATION	AR	
- 19	S1091-15	FUSE F150 ONLY	1	
- 20	S1090-3	CAP F150 ONLY	1	
- 21	S1360-5	CIRCUIT BREAKER F172 & FR172 ONLY	1	
- 22	S1880-1	RHEOSTAT F150 ONLY	1	
- 23	S1918-1	KNOB-RHEOSTAT F150 ONLY	1	
- 24	C413126-5	RHEOSTAT F172 & FR172 ONLY	1	
- 25	S1390-5	KNOB-RHEOSTAT F172 & FR172 ONLY	1	
- 26		CABLE ASSY - TRANSCEIVER TO POWER SUPPLY	NP	
	C30-2000-00	RECEPTACLE - POWER SUPPLY END KG	1	
	C30-1009-00	HOOD - POWER SUPPLY END KG	1	
	C30-1008-00	LEVER & PIVOT ASSY-POWER SUPPLY END AND TRANSCEIVER END KG	2	
	C30-2002-00	RECEPTACLE - TRANSCEIVER END KG	1	
	C30-1010-00	HOOD - TRANSCEIVER END KG	1	
- 27		CABLE ASSY - TRANSCEIVER TO VHF BROAD BAND XMITTING ANT	NP	
	RG-58A/U	COAXIAL CABLE - BULK ITEM	AR	
	UG-913U	PLUG - COAXIAL	1	

KING KX-160 RADIO INSTALLATION

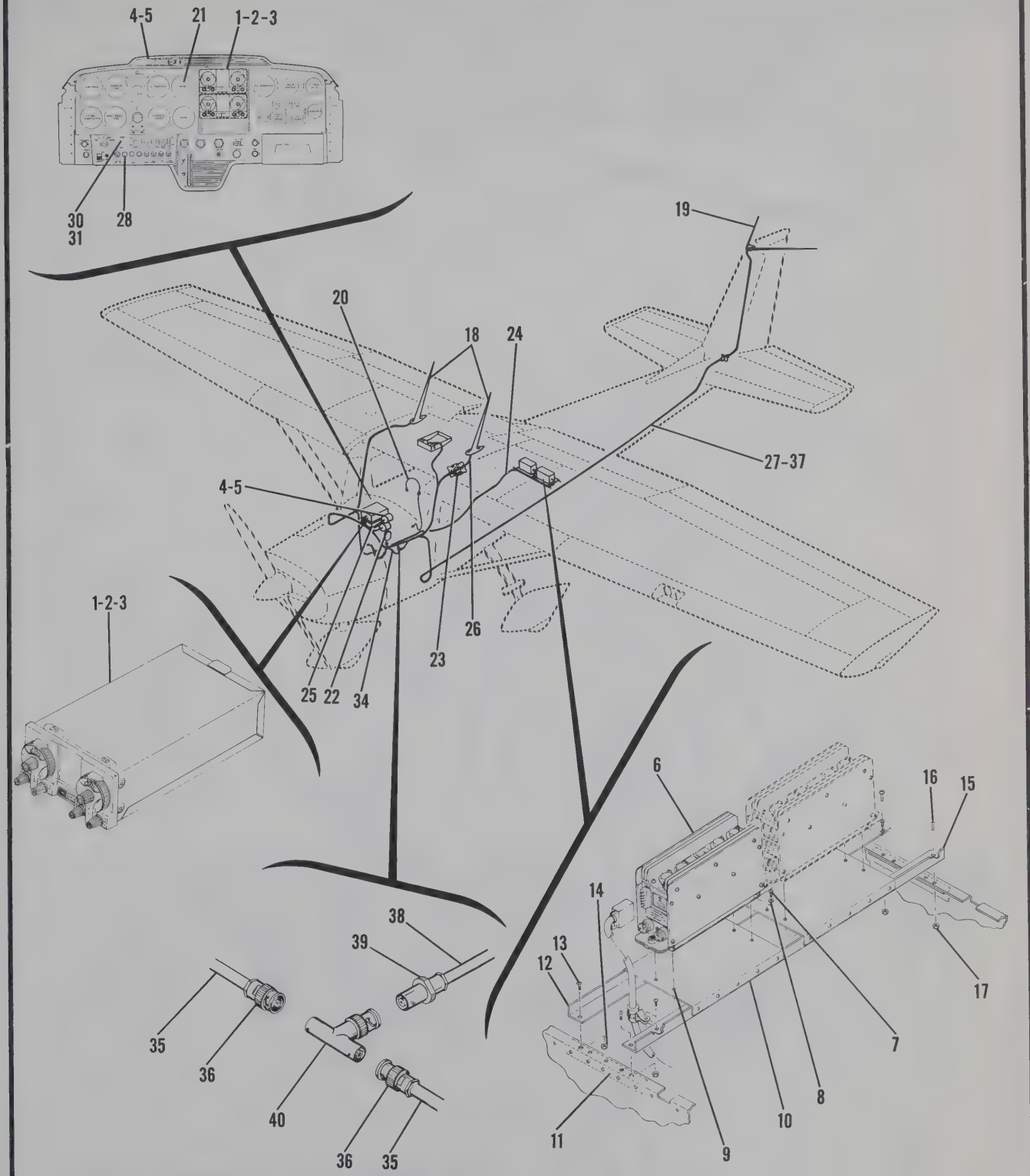

F150 SERIAL F150-0390 & ON

Figure 2-2. King KY-160 Radio Installation (Sheet 1 of 2)

KING KX-160 RADIO INSTALLATION

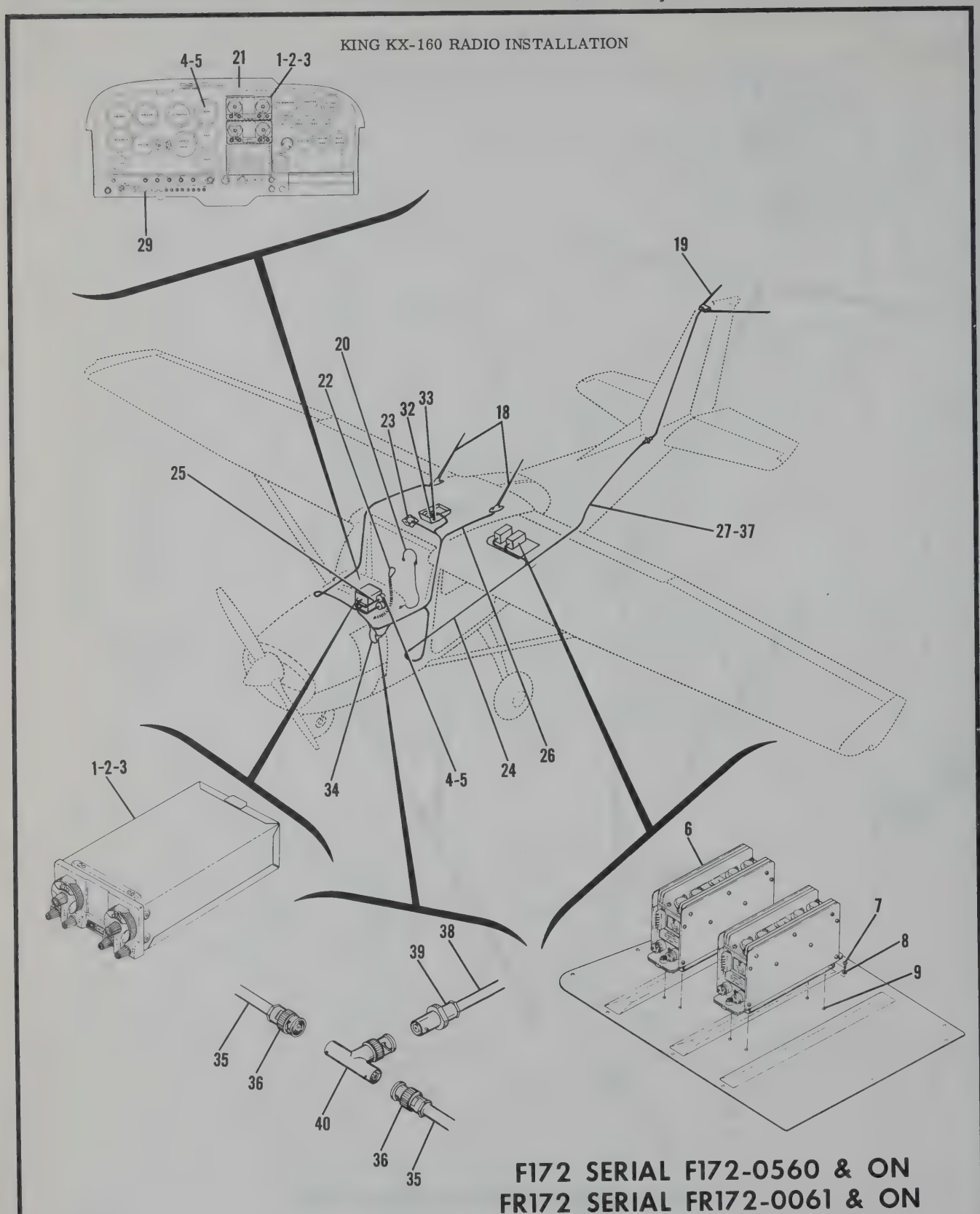

Figure 2-2. King KY-160 Radio Installation (Sheet 2 of 2)

FIGURE AND INDEX NO.	PART NUMBER	DESCRIPTION 1 2 3 4 5 6 7	UNITS PER ASSY	USABLE ON CODE
2-2-		KING KX-160 - RADIO INSTALLATION - NAV/COM EXPORT ONLY ----	NP	
- 1	KX-160AE	TRANSCEIVER EUROPEAN FREQUENCIES 117.0-134.95 MHZ -------	AR	
		WITHOUT IDENT FILTER & SWITCH KG		
- 2	KX-160E	TRANSCEIVER EUROPEAN FREQUENCIES 117.0-134.95 MHZ -------	AR	
		WITH IDENT FILTER & SWITCH KG		
- 3	KX-160FE	TRANSCEIVER EUROPEAN FREQUENCIES 117.0-134.95 MHZ -------	AR	
		WITH IDENT FILTER & SWITCH AND 10 WATTS OUTPUT KG		
		ATTACHING PARTS		
	S1021Z8-6	SCREW ----------	4	
	NAS446-4-3	NUT ----------	4	
		---*---		
- 4	KI-201	INDICATOR USED ONLY WHEN GLIDE SLOPE IS NOT ----------	AR	
		INSTALLED KG		
- 5	KI-211A	INDICATOR USED ONLY WHEN GLIDE SLOPE IS ----------	AR	
		INSTALLED KG		
		ATTACHING PARTS		
	AN515B6R10	SCREW ----------	3	
		---*---		
- 6	KS-505	POWER SUPPLY KG ----------	1	
		ATTACHING PARTS		
- 7	AN515-8R16	SCREW ----------	4	
- 8	AN936A8	WASHER ----------	4	
- 9	S1648-08-75	NUT ----------	4	
		---*---		
- 10	0412012-1	BRACKET 150 ONLY ----------	1	
- 11	0412011-1	STIFFENER 150 ONLY ----------	2	
- 12	0411547-2	SUPPORT 150 ONLY ----------	1	
		ATTACHING PARTS		
- 13	AN515-8R8	SCREW ----------	2	
- 14	NAS679A08	NUT ----------	2	
		---*---		
- 15	0411547-1	SUPPORT 150 ONLY ----------	1	
		ATTACHING PARTS		
- 16	AN515-8R8	SCREW ----------	2	
- 17	NAS679A08	NUT ----------	2	
		---*---		
- 18	SEE FIG 3-1	VHF ANTENNA INSTALLATION ----------	1	
- 19	SEE FIG 3-2	OMNI ANTENNA INSTALLATION ----------	1	
- 20	SEE FIG 4-4	HEADSET INSTALLATION ----------	1	
- 21	SEE FIG 4-1	TRANSMITTER SELECTOR SWITCH & AUDIO AMPLIFIER INSTL. --------	1	
- 22	SEE FIG 4-3	MICROPHONE INSTALLATION ----------	1	
- 23	SEE FIG 4-2	SPEAKER INSTALLATION ----------	1	
	SEE FIG 5-1	RADIO COOLING INSTALLATION ----------	1	
- 24		CABLE ASSY TRANSCEIVER TO POWER SUPPLY ----------	NP	
	C30-2002-00	RECEPTACLE - 20 PINS TRANSCEIVER END KG ----------	1	
	C30-2000-00	RECEPTACLE - 14 PINS POWER SUPPLY END KG ----------	1	
- 25		CABLE ASSY TRANSCEIVER TO INDICATOR ----------	NP	
	C30-2044-00	RECEPTACLE - 18 PINS TRANSCEIVER END KG ----------	1	
	C30-2000-00	RECEPTACLE - 14 PINS INDICATOR END KG ----------	1	
- 26		CABLE ASSY TRANSCEIVER TO VHF ANTENNA ----------	NP	
	RG-58A/U	COAXIAL CABLE BULK ITEM ----------	AR	
	C30-0005-00	CONNECTOR TRANSCEIVER END KG ----------	1	
- 27		CABLE ASSY TRANSCEIVER TO OMNI ANT BALUN STUB ----------	NP	
	RG-58A/U	COAXIAL CABLE BULK ITEM ----------	1	
	C30-0028-00	CONNECTOR TRANSCEIVER END KG ----------	1	
	UG-291/U	PLUG - COAXIAL ----------	1	
- 28	S1090-4	FUSE-HOLDER ASSY 150 ONLY ----------	1	
	S1090-9	BODY ASSY - FUSE-HOLDER ----------	1	
	S1090-13	CAP - FUSE HOLDER 15 AMP MARKING ----------	1	
	S1091-15	FUSE - 15 AMP 150 ONLY ----------	1	
- 29	S1360-15	CIRCUIT BREAKER 172 ONLY ----------	1	
- 30	S1880-1	RHEOSTAT 150 ONLY ----------	1	
- 31	S1918-1	KNOB - RHEOSTAT 150 ONLY ----------	1	
- 32	0413126-5	RHEOSTAT 172 ONLY ----------	1	
- 33	S1390-5	KNOB - RHEOSTAT 172 ONLY ----------	1	

CONTINUED ON NEXT PAGE

FIGURE AND INDEX NO.	PART NUMBER	DESCRIPTION 1 2 3 4 5 6 7	UNITS PER ASSY	USABLE ON CODE
		THE FOLLOWING ADDITIONAL PARTS ARE REQUIRED WHEN DUAL RADIOS ARE INSTALLED. ITEM 45 REPLACES ITEM 46.		
- 34		CABLE ASSY - TRANSCEIVER TO OMNI TEE CONNECTOR REPLACES - ITEMS 45 AND 46 WHEN DUAL RADIOS ARE INSTALLED	NP	
- 35	RG-58A/U	COAXIAL CABLE BULK ITEM 17 INCH LEADS	2	
	C3C-0028-00	CONNECTOR TRANSCEIVER END KG	2	
- 36	UG-88C/U	PLUG - COAXIAL OMNI TEE END	2	
- 37		CABLE ASSY - OMNI TEE TO BALUN STUB REPLACES ITEM 45 WHEN DUAL RADIOS ARE INSTALLED	NP	
- 38	RG-58A/U	COAXIAL CABLE BULK ITEM	AR	
- 39	UG-89/U	JACK-COAXIAL OMNI TEE END	1	
	UG-291/U	PLUG-COAXIAL	1	
- 40	UG-274/U	TEE CONNECTOR	1	

NARCO MARK 12 RADIO INSTALLATION

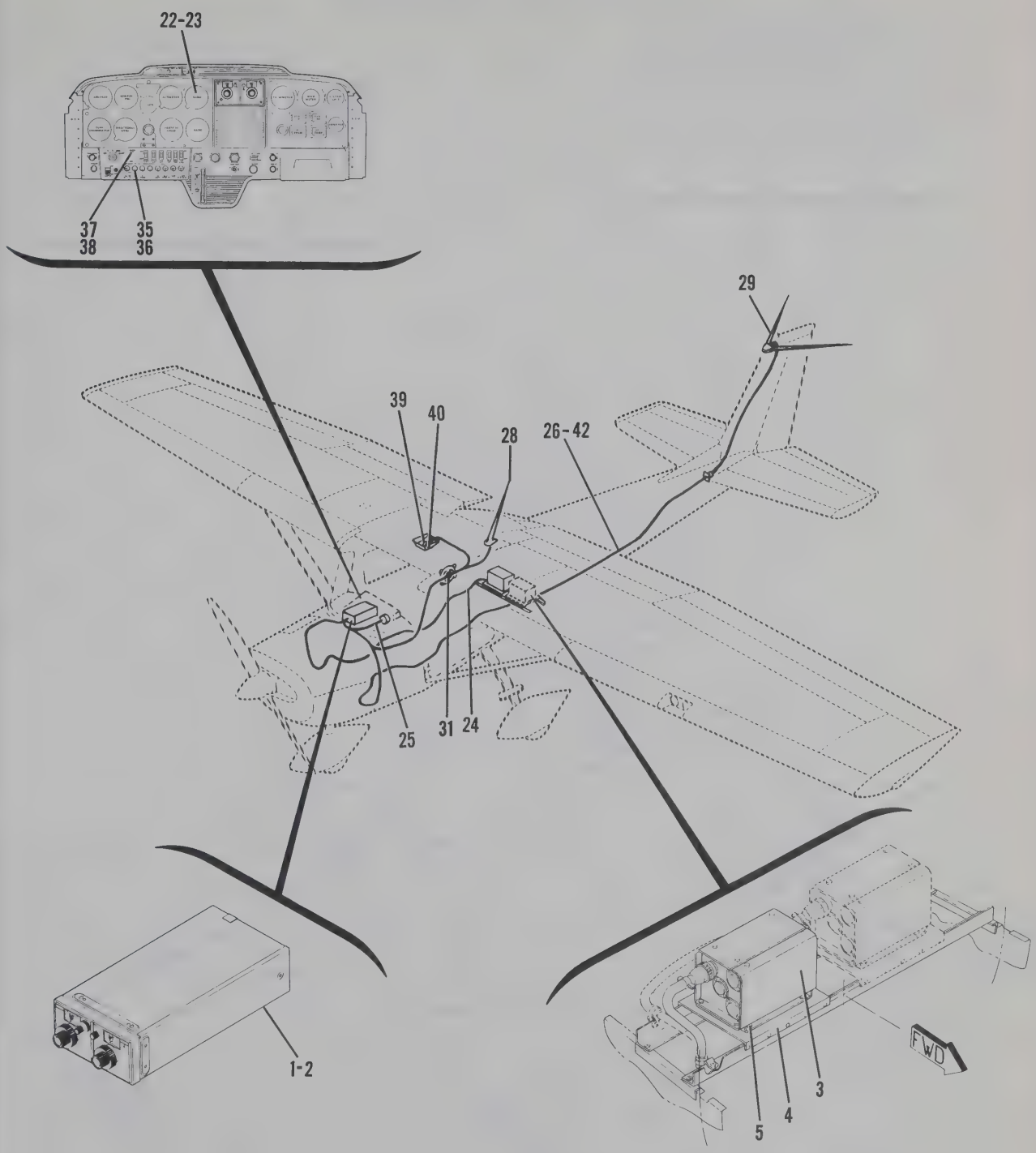

150 SERIAL 15069309 & ON

Figure 2-3. Narco Mark 12 Radio Installation (Sheet 1 of 8)

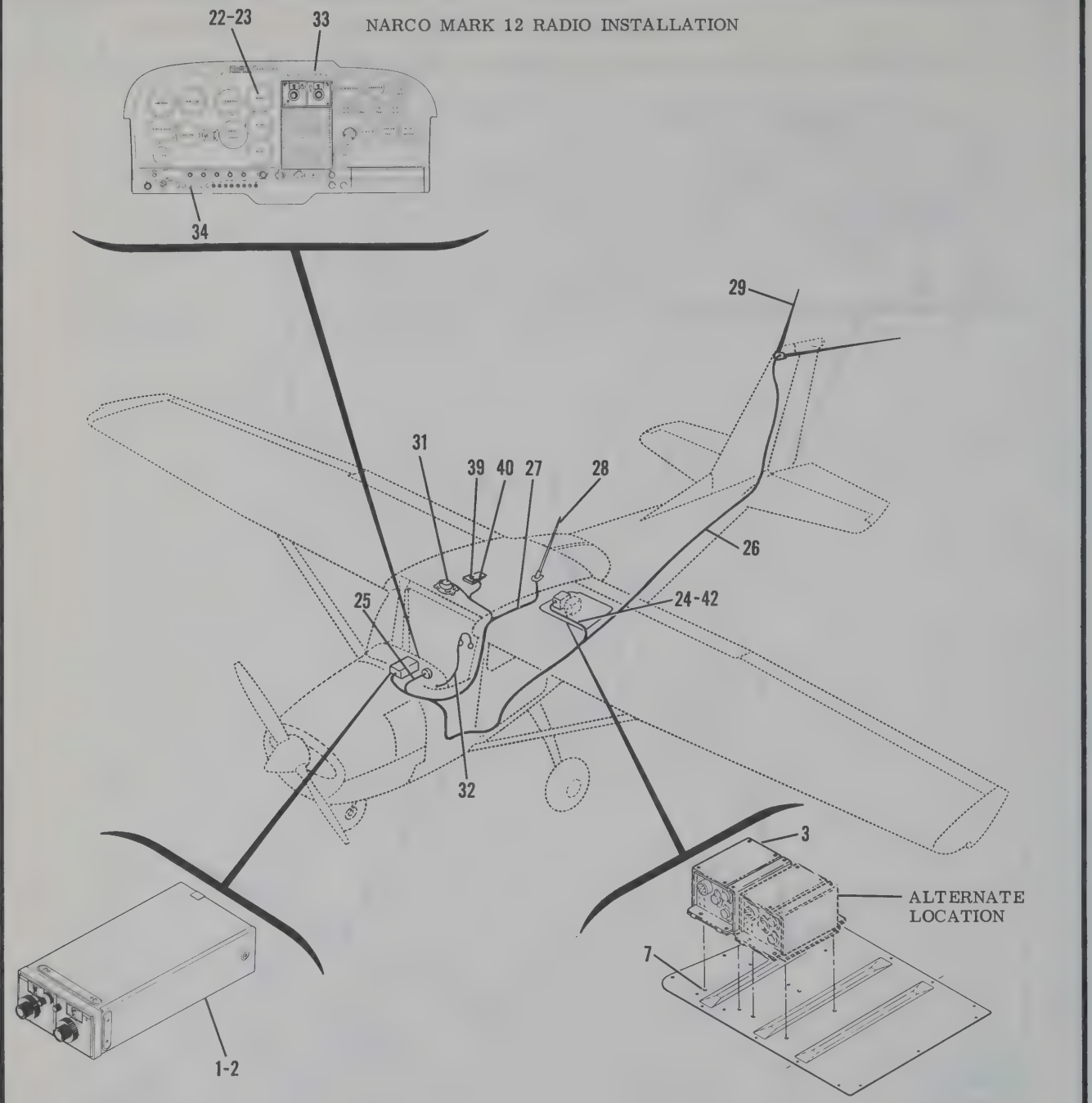

172 SERIAL 17257162 & ON

Figure 2-3. Narco Mark 12 Radio Installation (Sheet 2 of 8)

NARCO MARK 12 RADIO INSTALLATION

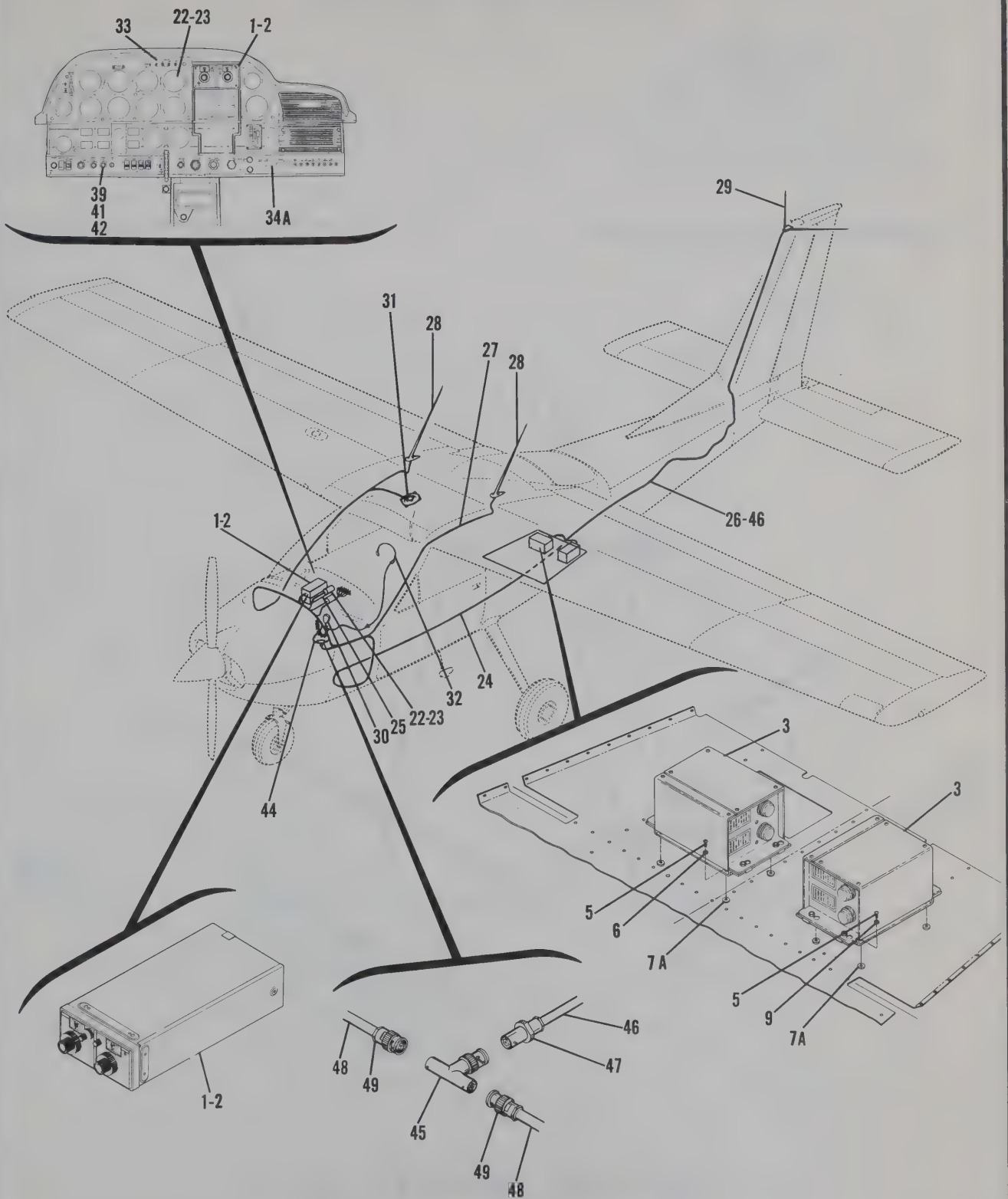

177 SERIAL 17700001 & ON

Figure 2-3. Narco Mark 12 Radio Installation (Sheet 3 of 8)

NARCO MARK 12 RADIO INSTALLATION

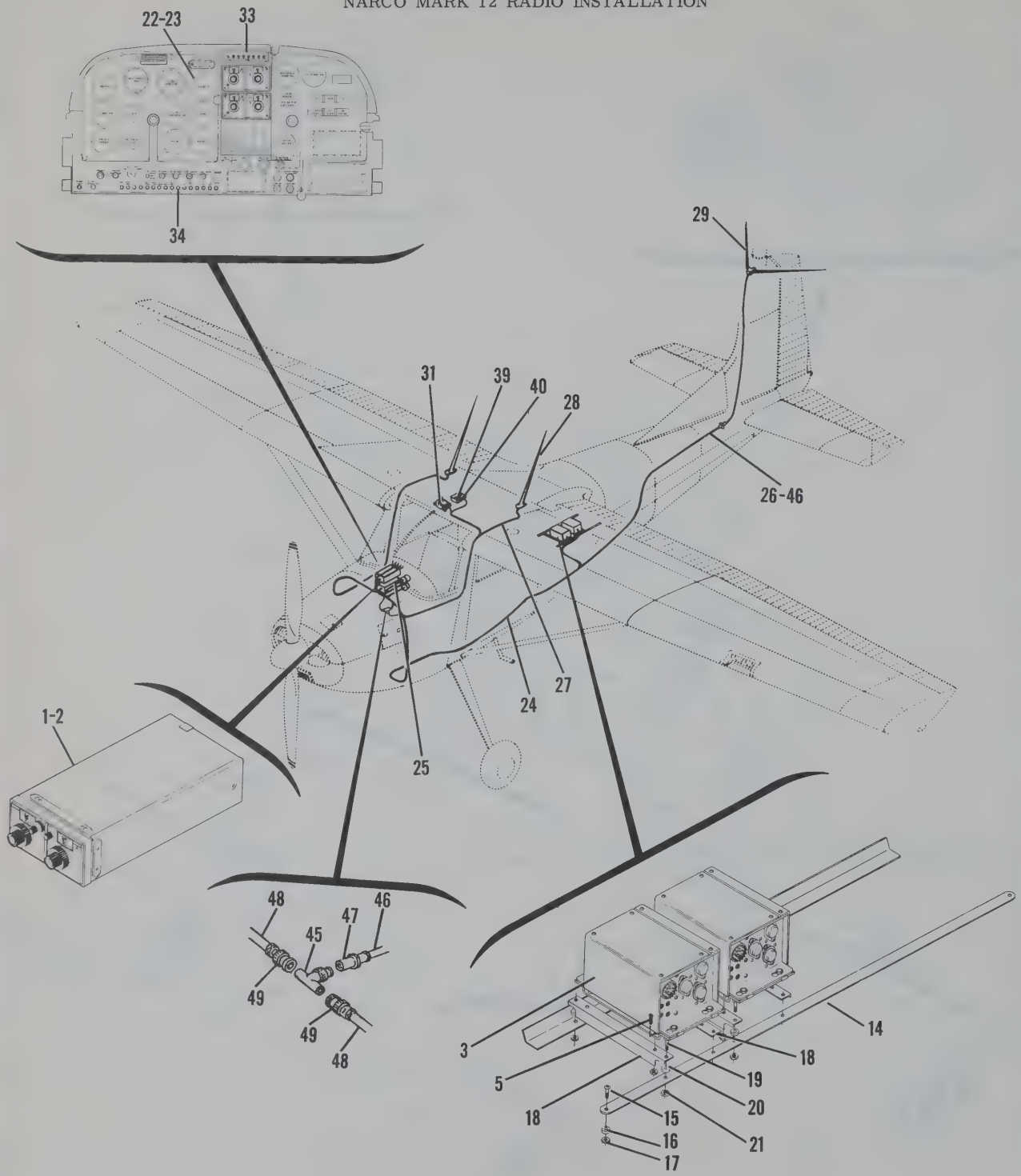

180 SERIAL 18051994 & ON
185 SERIAL 185-1448 & ON

Figure 2-3. Narco Mark 12 Radio Installation (Sheet 4 of 8)

NARCO MARK 12 RADIO INSTALLATION

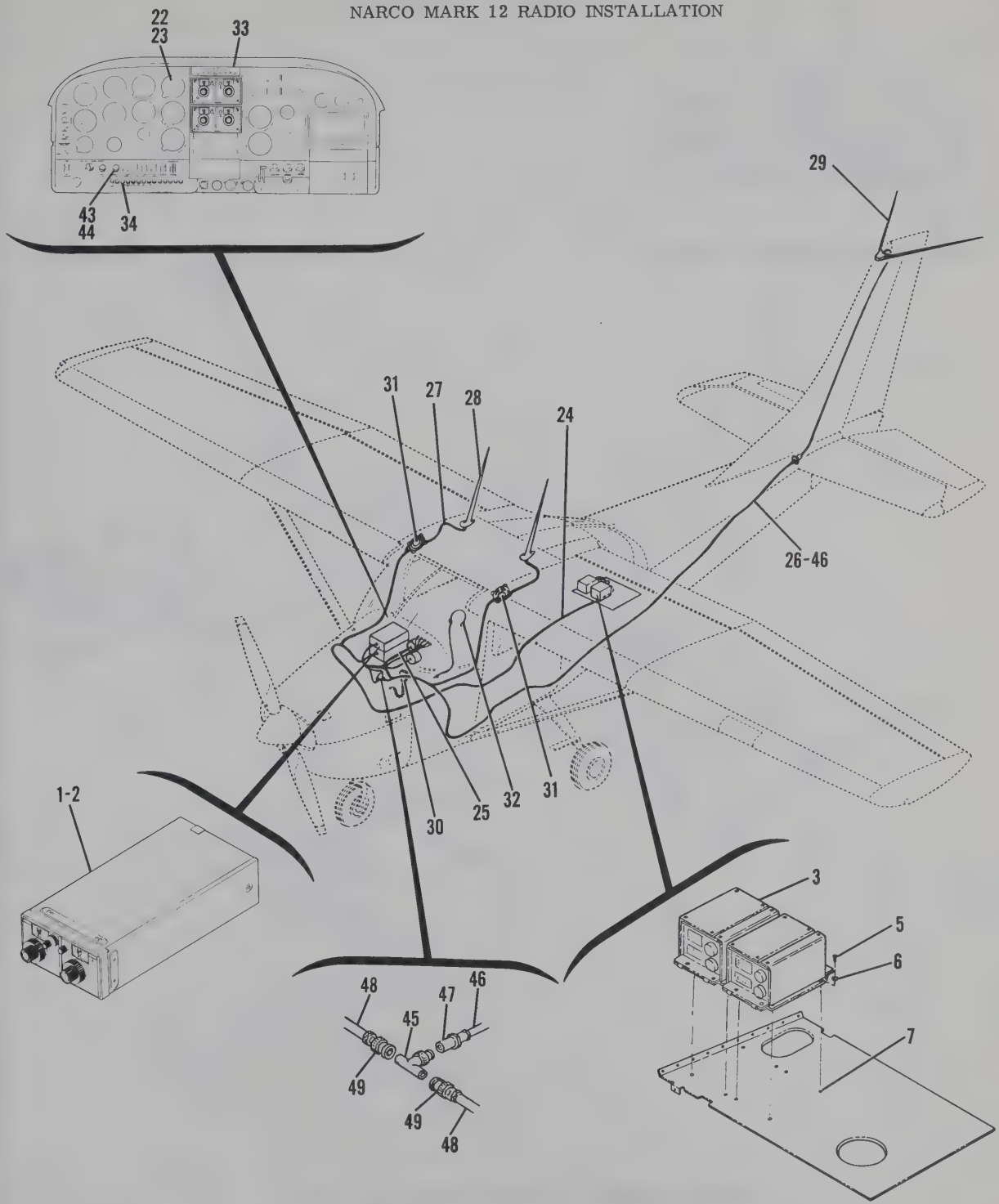

182 SERIAL 18259306 & ON

Figure 2-3. Narco Mark 12 Radio Installation (Sheet 5 of 8)

NARCO MARK 12 RADIO INSTALLATION

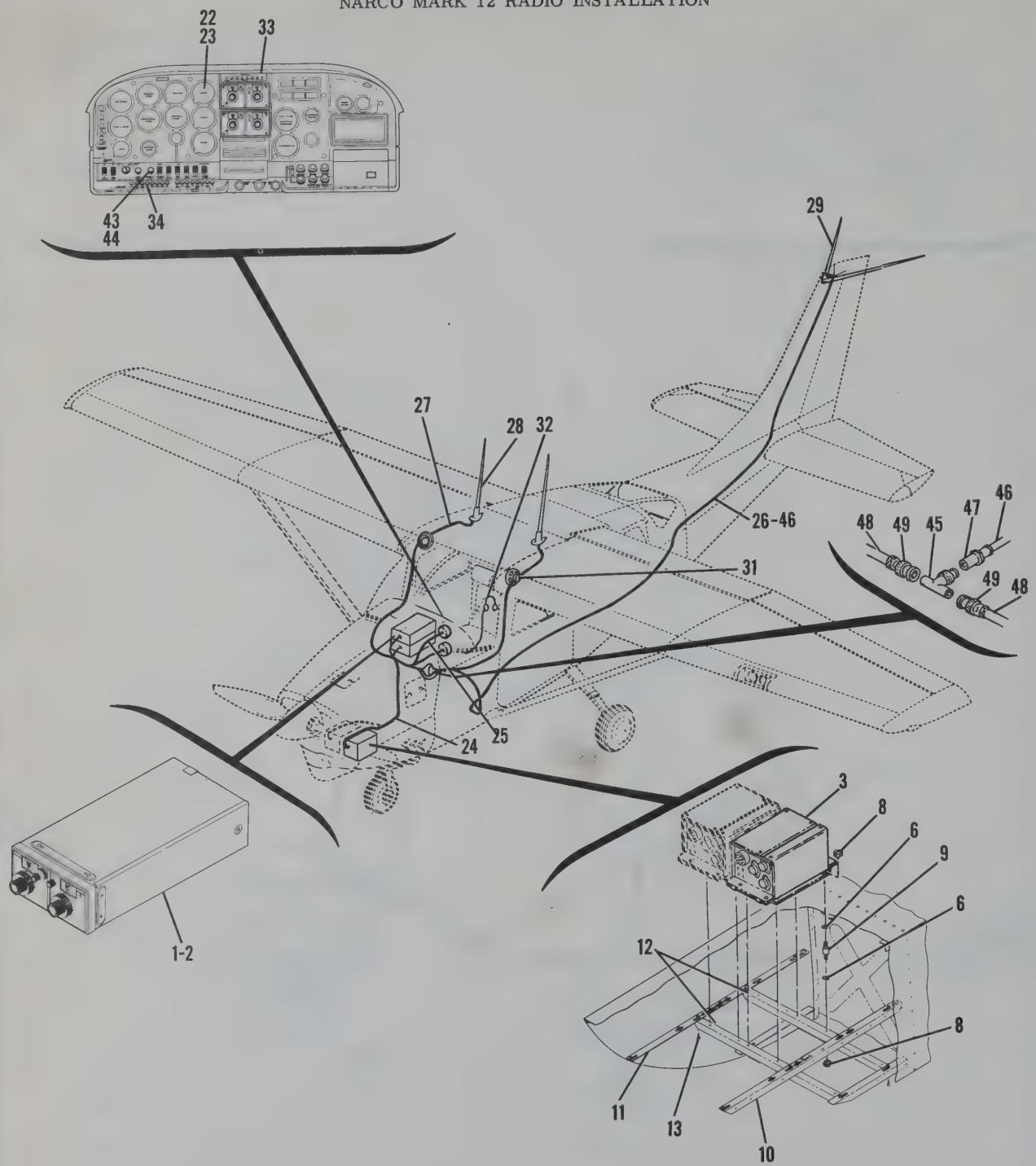

P206 SERIAL P206-0520 & ON
U206 SERIAL U206-1235 & ON
TP206 SERIAL TP206-0520 & ON
TU206 SERIAL TU206-1235 & ON

Figure 2-3. Narco Mark 12 Radio Installation (Sheet 6 of 8)

NARCO MARK 12 RADIO INSTALLATION

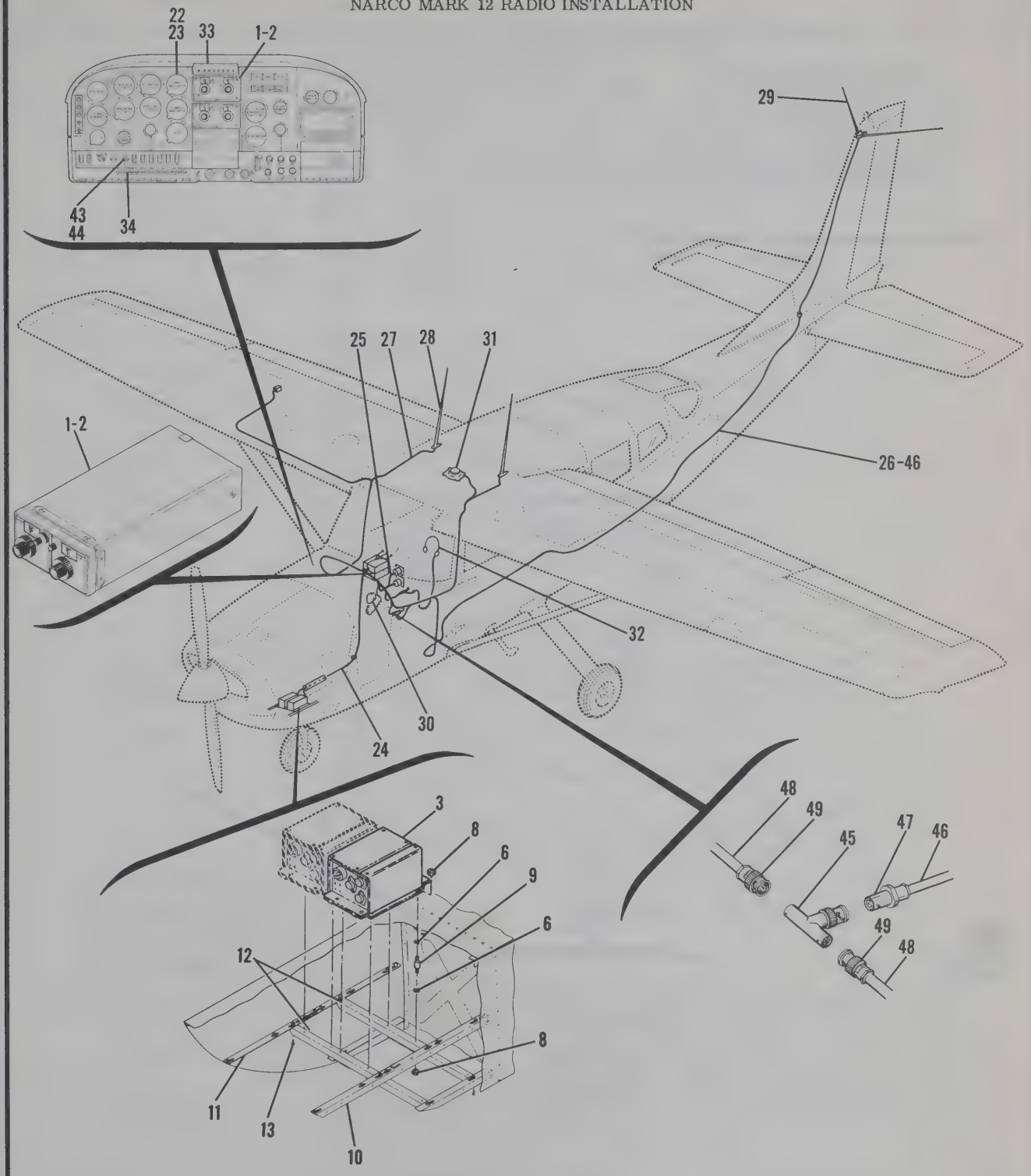

207 SERIAL 20700001 & ON
T207 SERIAL 20700001 & ON

Figure 2-3. Narco Mark 12 Radio Installation (Sheet 7 of 8)

NARCO MARK 12 RADIO INSTALLATION

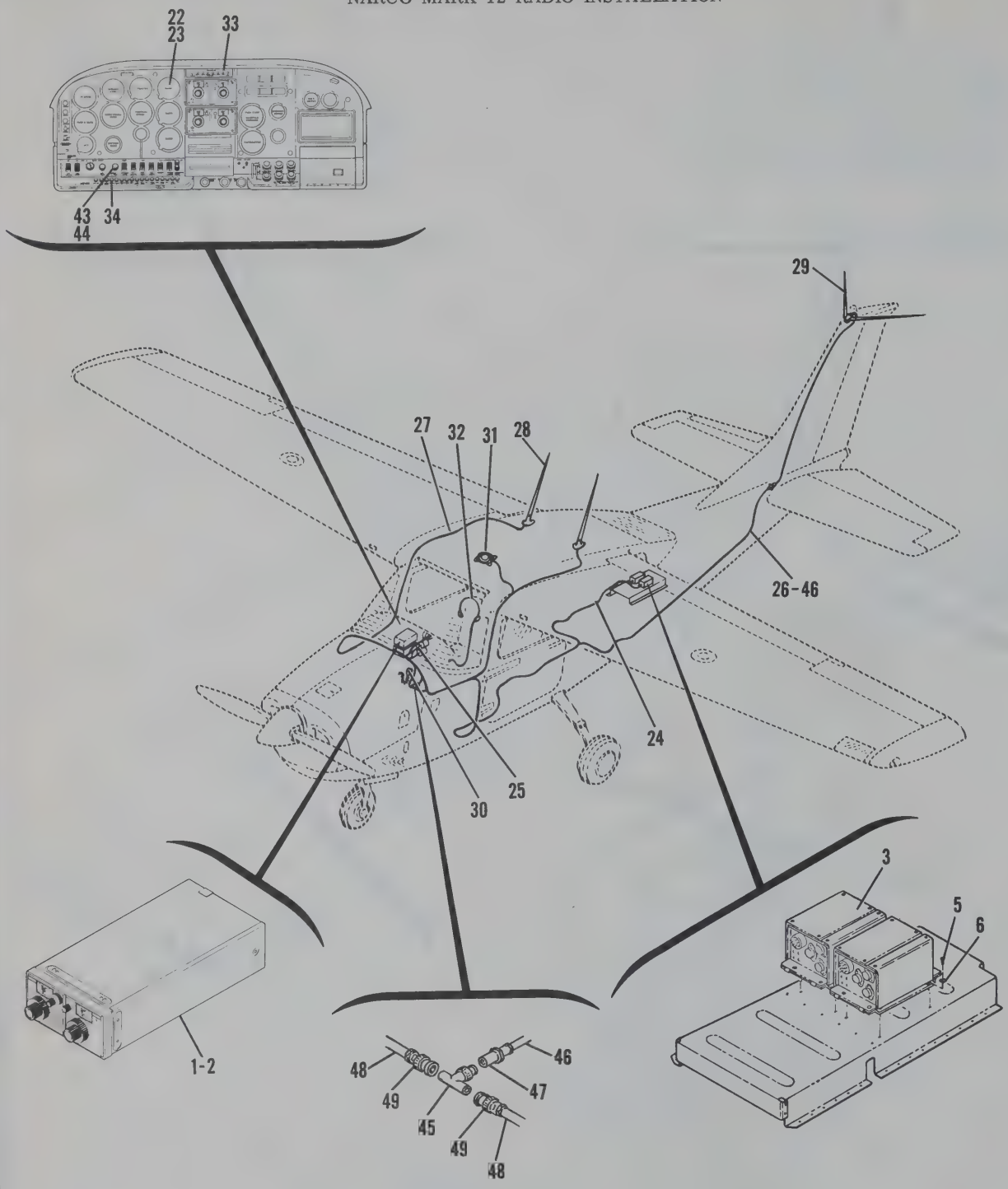

210 SERIAL 21059062 & ON
T210 SERIAL T210-0393 & ON

Figure 2-3. Narco Mark 12 Radio Installation (Sheet 8 of 8)

FIGURE AND INDEX NO.	PART NUMBER	DESCRIPTION 1 2 3 4 5 6 7	UNITS PER ASSY	USABLE ON CODE
2-3-		RADIO INSTALLATION-NARCO MARK 12 WITH VOA-8 OR VOA-9 ALL --	NP	
		MODELS EXCEPT 188 & 337 SERIES		
- 1	MARK 12A	TRANSCEIVER - 90 CHANNEL NARO ALL MODELS	1	
- 2	MARK 12A	TRANSCEIVER - 360 CHANNEL NARO ALL MODELS	1	
		ATTACHING PARTS		
	S1022Z6-6	SCREW 150, 172, 180 & 185	4	
	NAS446-2-3	NUT 150, 172, 180 & 185	4	
	S1021Z8-8	SCREW 182, 206 SERIES, 207 SERIES & 210 SERIES	4	
	AN960-8L	WASHER 182, 206 SERIES, 207 SERIES & 210 SERIES	4	
	NAS446-4-3	NUT 182, 206 SERIES, 207 SERIES & 210 SERIES	4	
	S1021Z6-6	SCREW 177 ONLY	4	
	NAS446-2-3	NUT 177 ONLY	4	
		---*---		
	0570004-1	STRAP XMTR DUSTCOVER SUPPORT STRAP 150 ONLY	1	
		ATTACHING PARTS		
	S1021Z8-8	SCREW 150 ONLY	1	
	NAS395-14-3	NUT 150 ONLY	1	
		---*---		
- 3	T12MP-12A	POWER SUPPLY NARO	1	
		ATTACHING PARTS		
- 4	0412012-1	BRACKET 150 ONLY	1	
- 5	AN515-8R16	SCREW ALL MODELS EXCEPT 206 SERIES & 207 SERIES	4	
- 6	AN936A8	WASHER	4	
- 7	S1648-08-75	RIVNUT ALL MODELS EXCEPT 150, 180, 185 & 206 SERIES	4	
- 7A	NAS1329-08-120	RIVNUT 177 ONLY	4	
- 8	AN340B8	NUT 206 SERIES & 207 SERIES ONLY	8	
- 9	0411059-3	SHOCKMOUNT 206 SERIES & 207 SERIES ONLY	4	
		---*---		
- 10	1270627-85	SIDE ANGLE ASSY - LH SIDE - STANDARD EQUIPMENT	REF	
		ON AIRCRAFT 206 SERIES & 207 SERIES ONLY		
- 11	1270627-86	SIDE ANGLE ASSY - RH SIDE - STANDARD EQUIPMENT	REF	
		ON AIRCRAFT 206 SERIES & 207 SERIES ONLY		
- 12	1270627-56	ATTACH ANGLE 206 SERIES & 207 SERIES ONLY	2	
		ATTACHING PARTS		
- 13	AN520-10R6	SCREW	4	
		---*---		
- 14	0770049-1	ANGLE 180 & 185 ONLY	1	
		ATTACHING PARTS		
- 15	AN515-8R10	SCREW	2	
- 16	S355	SPACER	2	
- 17	NAS679A08	NUT	2	
		---*---		
- 18	C770713-1	ANGLE - ATTACH 180 & 185 ONLY	2	
		ATTACHING PARTS		
- 19	AN515-8R10	SCREW	4	
- 20	S355	SPACER	4	
- 21	NAS679A08	NUT	4	
		---*---		
- 22	VCA-9	CONVERTER-INDICATOR USED ONLY WHEN GLIDE SLOPE	1	
		IS INSTALLED WITH A 360 CHANNEL MARK 12. NARO		
		ATTACHING PARTS		
	AN515B6R10	SCREW	3	
		---*---		
- 23	VCA-8	CONVERTER-INDICATOR USED ONLY WHEN GLIDE SLOPE	1	
		IS NOT INSTALLED NARO		
		ATTACHING PARTS		
	AN515B6R10	SCREW	3	
		---*---		
- 24		CABLE ASSY - TRANSCEIVER TO POWER SUPPLY	NP	
	S1838-2	CONNECTOR - CONNECTS TO AUDIO JUNCTION BOX	1	
		CONNECTOR KIT NARO		
	K41271-1	RECEPTACLE - 16 PIN NARO	2	
	K41182-2	CAP-PLUG NARO	2	
- 25		CABLE ASSY - TRANSCEIVER TO VCA-8 OR VOA-9 INDICATOR	NP	
	K41116-1	PLUG - CONNECTS TO TRANSCEIVER NARO	1	
	MS3106A-20-27S	PLUG - CONNECTS TO VCA-8 OR VOA-9	1	
	MS3057-12	CLAMP - CONNECTS TO VOA-8 OR VOA-9	1	

CONTINUED ON NEXT PAGE

FIGURE AND INDEX NO.	PART NUMBER	DESCRIPTION 1 2 3 4 5 6 7	UNITS PER ASSY	USABLE ON CODE
2-3- 26		CABLE ASSY - TRANSCEIVER TO BALUN STUB	NP	
	RG-58A/U	COAXIAL CABLE - BULK ITEM	AR	
	13B	PLUG - MOTOROLA TYPE - CONNECTS TO TRANSCEIVER	1	
	UG-291/U	JACK - COAXIAL - CONNECTS TO BALUN STUB 150, 172, 177 - 180 & 185 ONLY	1	
	UG-88C/U	PLUG - COAXIAL - CONNECTS TO BALUN STUB 182, 206 SERIES, 207 SERIES & 210 SERIES ONLY	1	
- 27		CABLE ASSY - TRANSCEIVER TO VHF ANTENNA	NP	
	RG-58A/U	COAXIAL CABLE - BULK ITEM	AR	
	13E	PLUG - RCA PHONO TYPE	1	
	UG-913/U	PLUG - COAXIAL - RIGHT ANGLE 182, 206 SERIES, 207 SERIES & 210 SERIES ONLY 210 SERIES ONLY	1	
	UG-88C/U	PLUG - COAXIAL - 150, 172, 177, 180 & 185 ONLY	1	
- 28	SEE FIG 3-1	VHF ANTENNA INSTALLATION	1	
- 29	SEE FIG 3-2	OMNI ANTENNA INSTALLATION	1	
- 30	SEE FIG 4-3	MICROPHONE INSTALLATION	1	
- 31	SEE FIG 4-2	SPEAKER INSTALLATION	1	
- 32	SEE FIG 4-4	HEADSET INSTALLATION	1	
	SEE FIG 5-1	RADIO COOLING	1	
	SEE FIG 5-2	RADIO NOISE FILTER	1	
- 33	SEE FIG 4-1	AUDIO TRANSMITTER & SELECTOR SWITCHES INSTALLATION	1	
- 34	S1360-10	CIRCUIT BREAKER 172, 180, 182, 185, 206 SERIES, 207 SERIES & 210 SERIES ONLY	1	
- 37	S1880-1	RHEOSTAT 150 ONLY	1	
- 38	S1918-1	KNOB - RHEOSTAT 150 ONLY	1	
- 39	0413126-5	RHEOSTAT 172, 177, 180 & 185 ONLY	1	
- 40	S1390-5	KNOB - RHEOSTAT 172, 180 & 185 ONLY	1	
- 41	S1753-6	KNOB - RHEOSTAT 177 ONLY	1	
- 42	S1780-4	INSERT - RHEOSTAT KNOB 177 ONLY	1	
- 43	S1880-3	RHEOSTAT 182, 206 SERIES, 207 SERIES & 210 SERIES ONLY	1	
- 44	S1753-7	KNOB - RHEOSTAT 182, 206 SERIES, 207 SERIES & 210 SERIES ONLY	1	
		DUAL MARK 12A WITH DUAL VOA-8 OR VOA-9 INSTALLATION THE FOLLOWING PARTS ARE REQUIRED IN ADDITION TO THOSE REQUIRED FOR A SINGLE RADIO INSTALLATION. ITEMS 46 & 47 REPLACE ITEM 26 WHEN DUAL RADIOS ARE INSTALLED.		
- 45	UG-274/U	TEE ADAPTER	1	
- 46		CABLE ASSY - TEE ADAPTER TO BALUN STUB-REPLACES ITEM 26 WHEN DUAL RADIOS ARE INSTALLED.		
	RG-58A/U	COAXIAL CABLE BULK ITEM	1	
- 47	UG-89/U	PLUG - COAXIAL	1	
		CABLE ASSY-TRANSCEIVER TO TEE ADAPTER	NP	
- 48	RG-58A/U	COAXIAL CABLE - TWO 33 INCH LONG CABLES BULK ITEM	AR	
	13B	PLUG - MOTOROLA TYPE	1	
- 49	UG-88C/U	PLUG - COAXIAL	1	

NARCO UGR-2 GLIDE SLOPE RECEIVER INSTALLATION

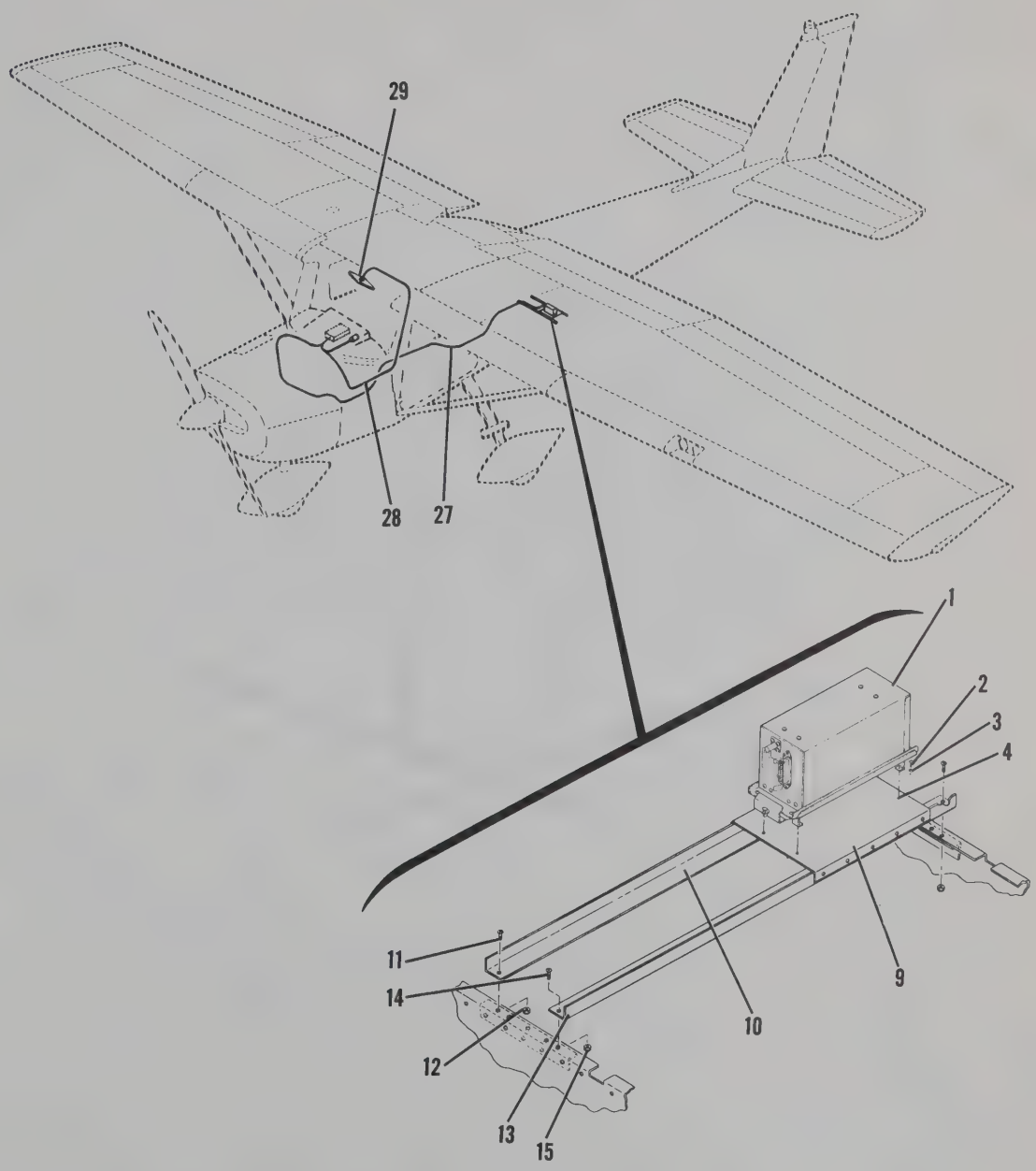

150 SERIAL 15069309 & ON

Figure 2-4. Narco (UGR-2) Glide Slope Receiver Installation (Sheet 1 of 8)

NARGO UGR-2 GLIDE SLOPE RECEIVER INSTALLATION

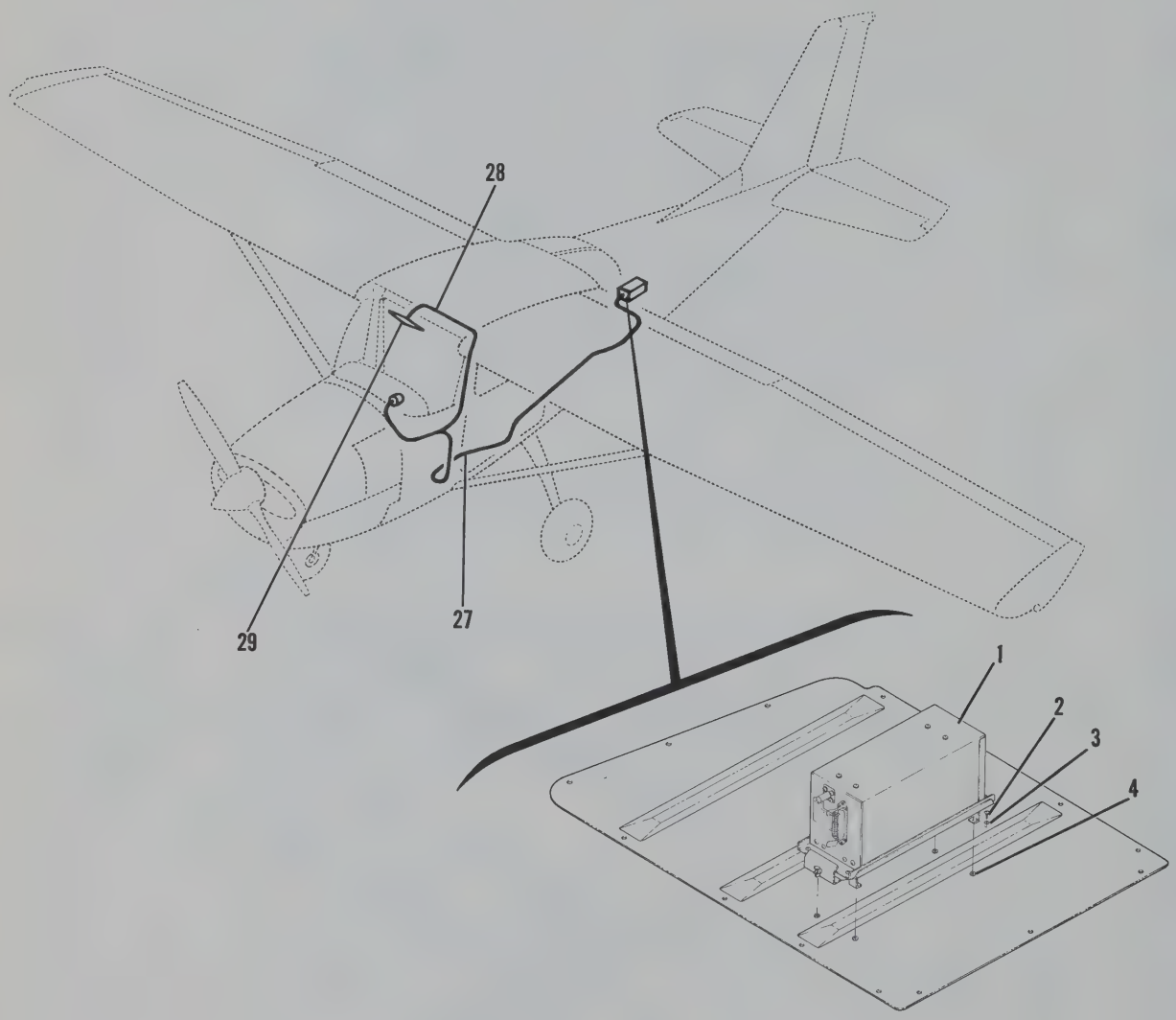

172 SERIAL 17257162 & ON

Figure 2-4. Narco (UGR-2) Glide Slope Receiver Installation (Sheet 2 of 8)

NARCO UGR-2 GLIDE SLOPE RECEIVER INSTALLATION

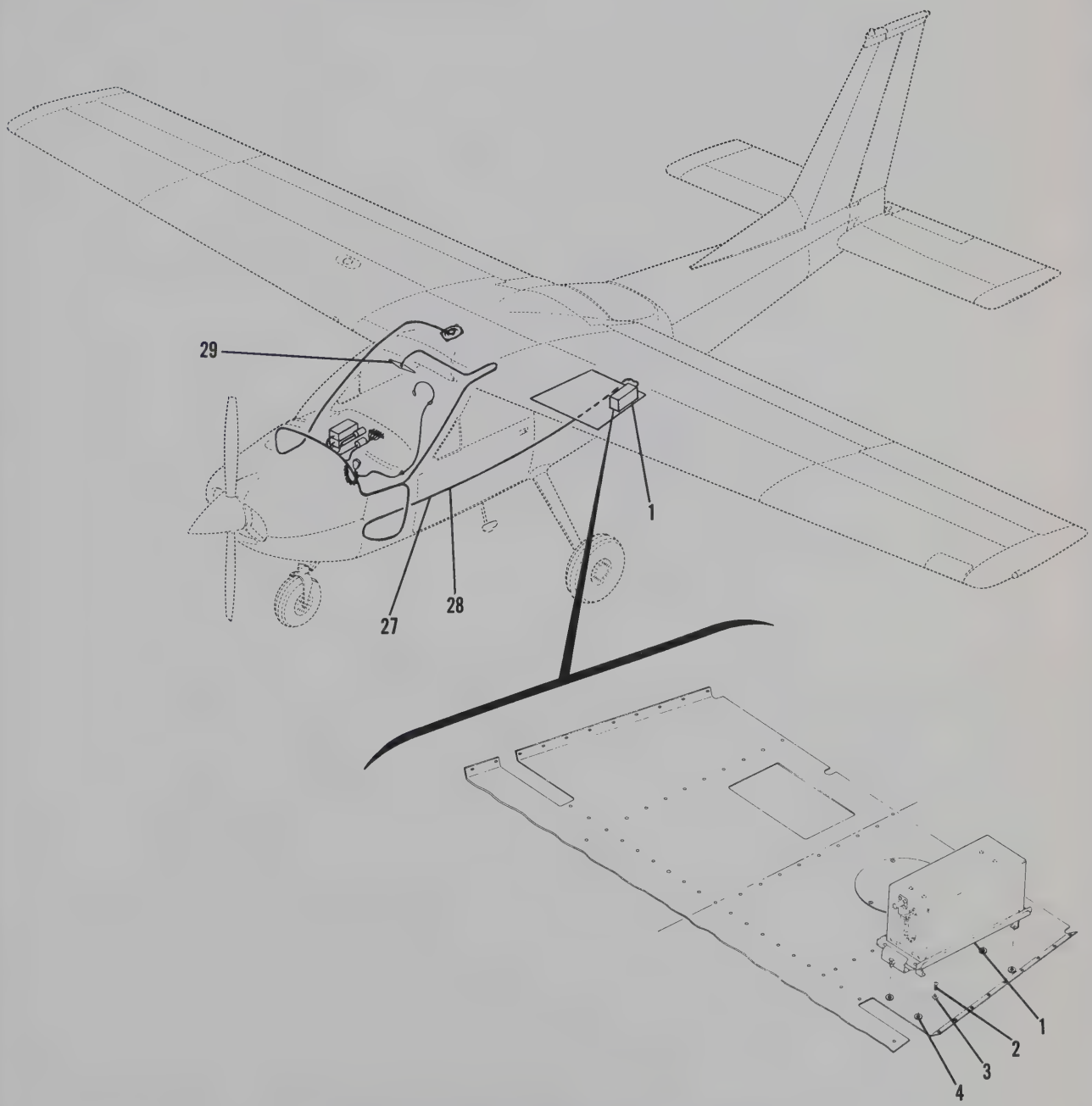

177 SERIAL 17701165 & ON

Figure 2-4. Narco (UGR-2) Glide Slope Receiver Installation (Sheet 3 of 8)

NARCO UGR-2 GLIDE SLOPE RECEIVER INSTALLATION

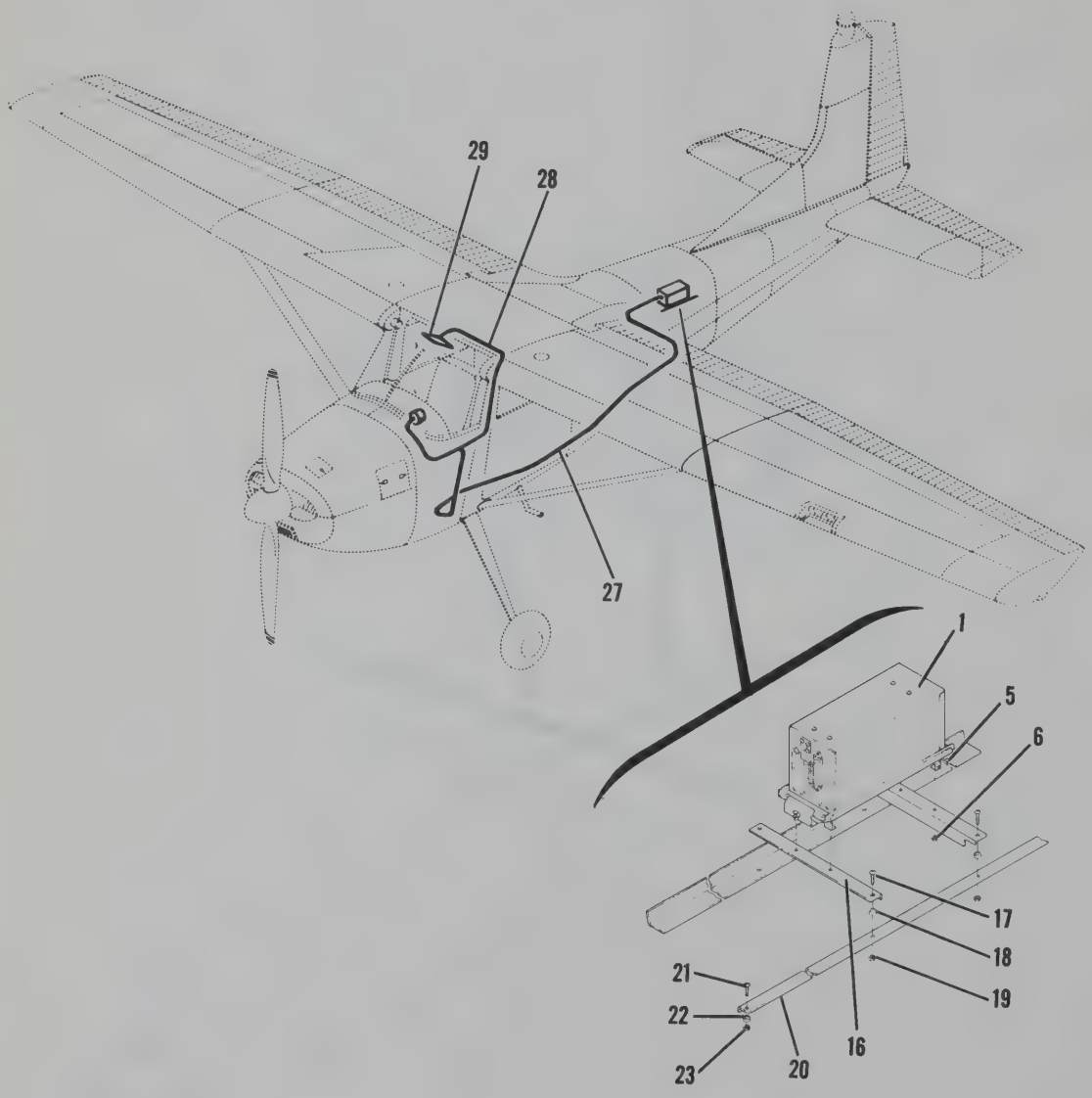

180 SERIAL 18051994 & ON
185 SERIAL 185-1448 & ON

Figure 2-4. Narco (UGR-2) Glide Slope Receiver Installation (Sheet 4 of 8)

NARCO UGR-2 GLIDE SLOPE RECEIVER INSTALLATION

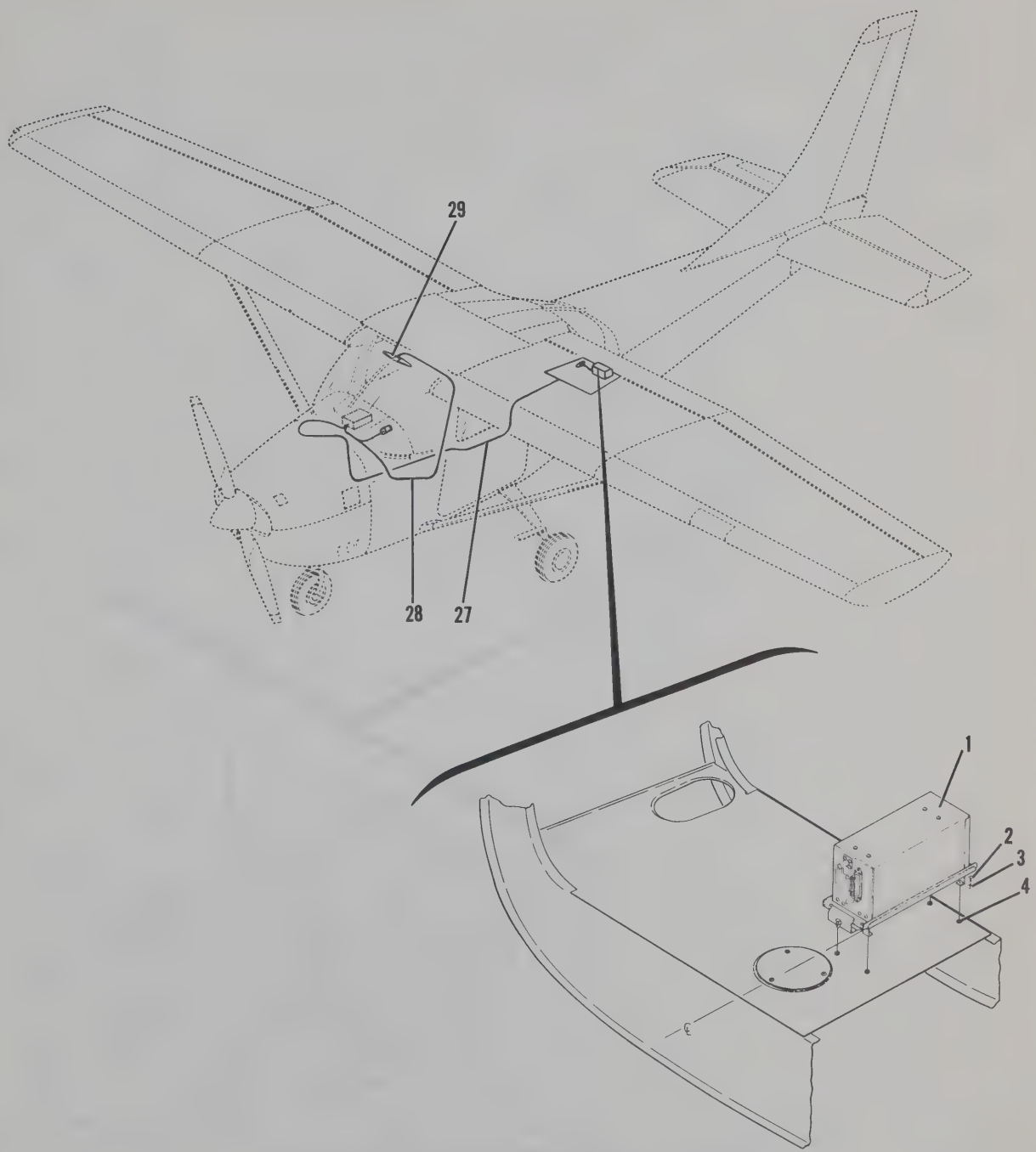

182 SERIAL 18259306 & ON

Figure 2-4. Narco (UGR-2) Glide Slope Receiver Installation (Sheet 5 of 8)

NARCO UGR-2 GLIDE SLOPE RECEIVER INSTALLATION

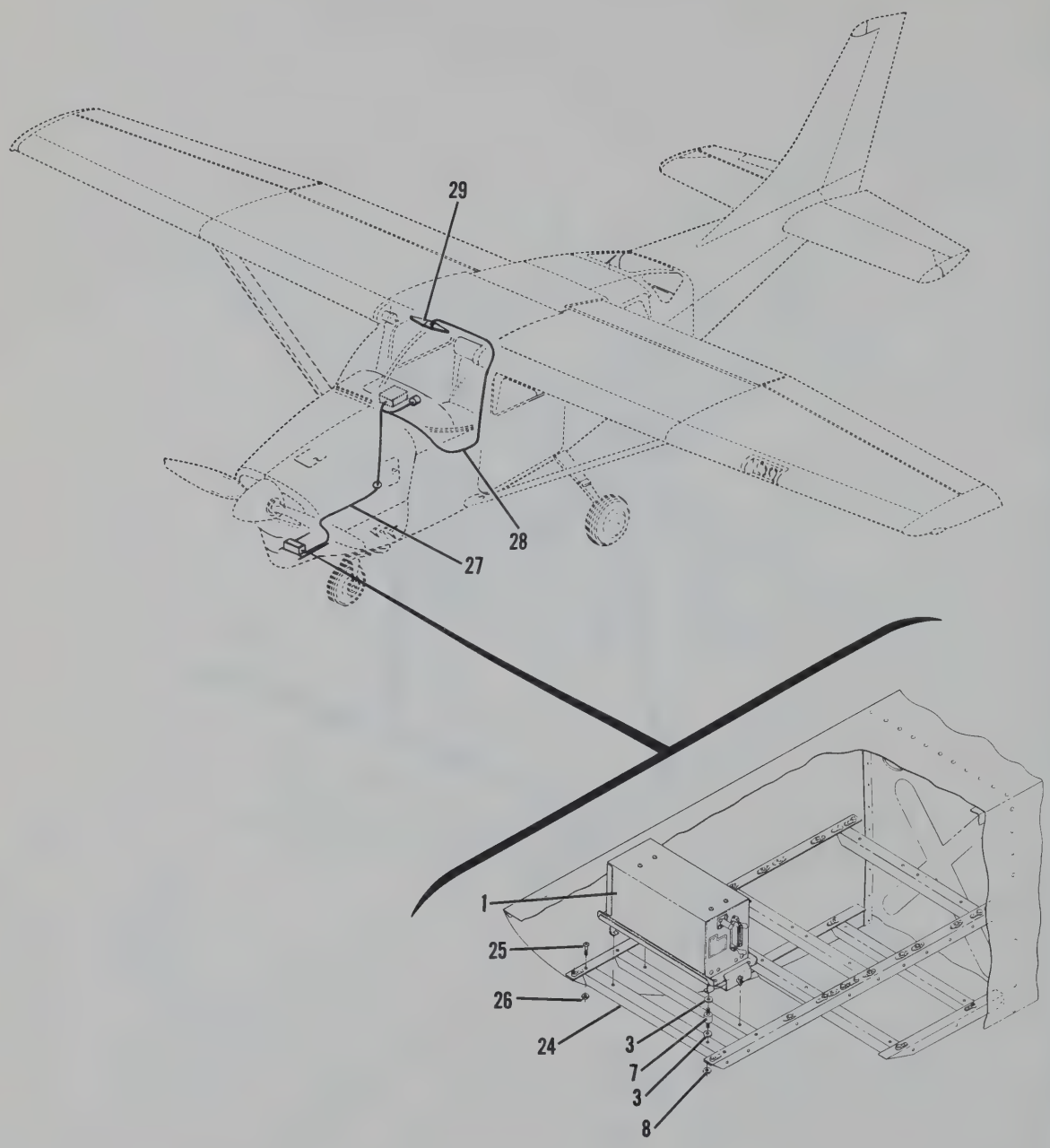

P206 SERIAL P206-0520 & ON
U206 SERIAL U206-1235 & ON
TP206 SERIAL TP206-0520 & ON
TU206 SERIAL TU206-1235 & ON

Figure 2-4. Narco (UGR-2) Glide Slope Receiver Installation (Sheet 6 of 8)

NARCO UGR-2 GLIDE SLOPE RECEIVER INSTALLATION

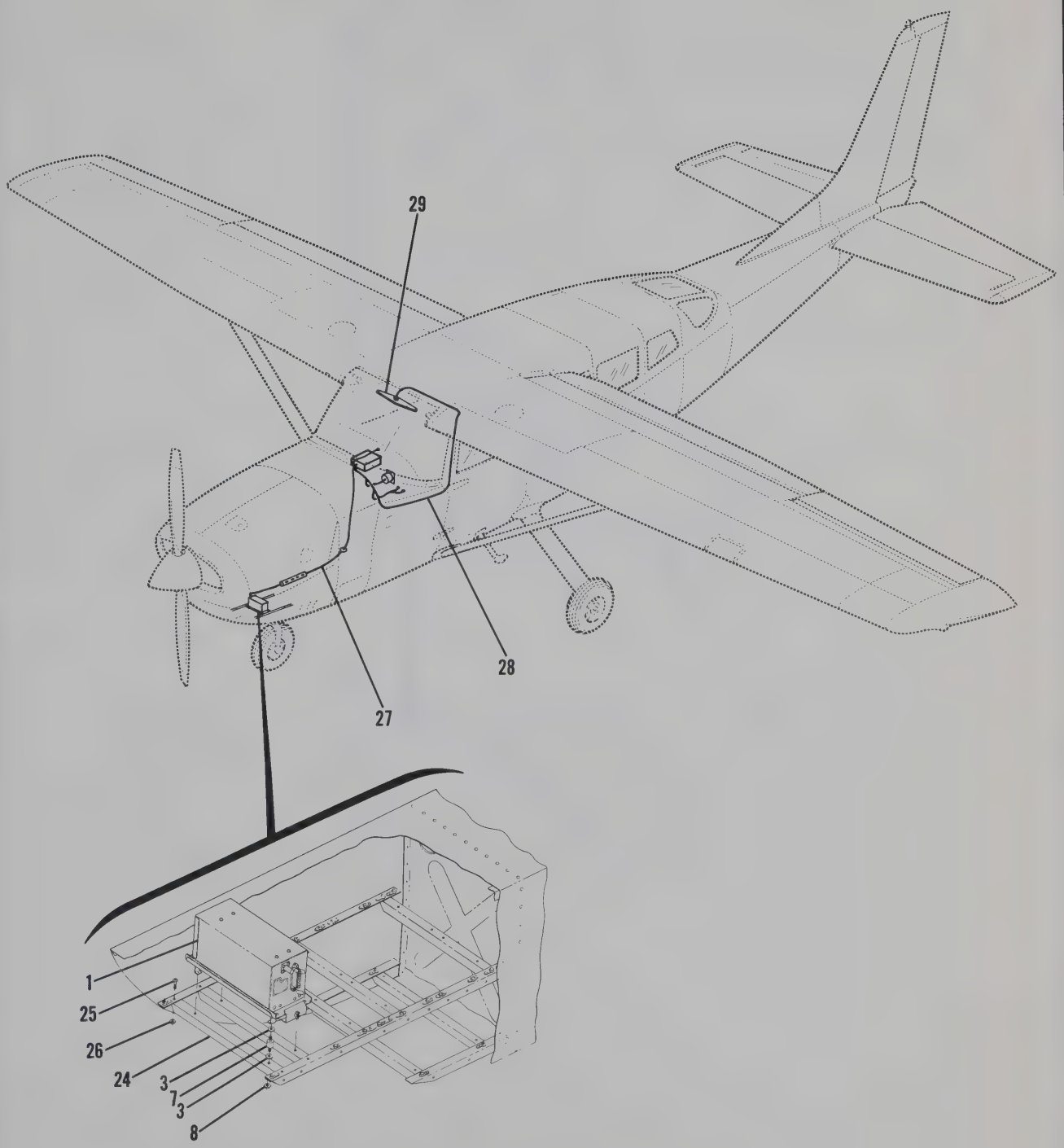

207 SERIAL 20700001 & ON
T207 SERIAL 20700001 & ON

Figure 2-4. Narco (UGR-2) Glide Slope Receiver Installation (Sheet 7 of 8)

NARCO UGR-2 GLIDE SLOPE RECEIVER INSTALLATION

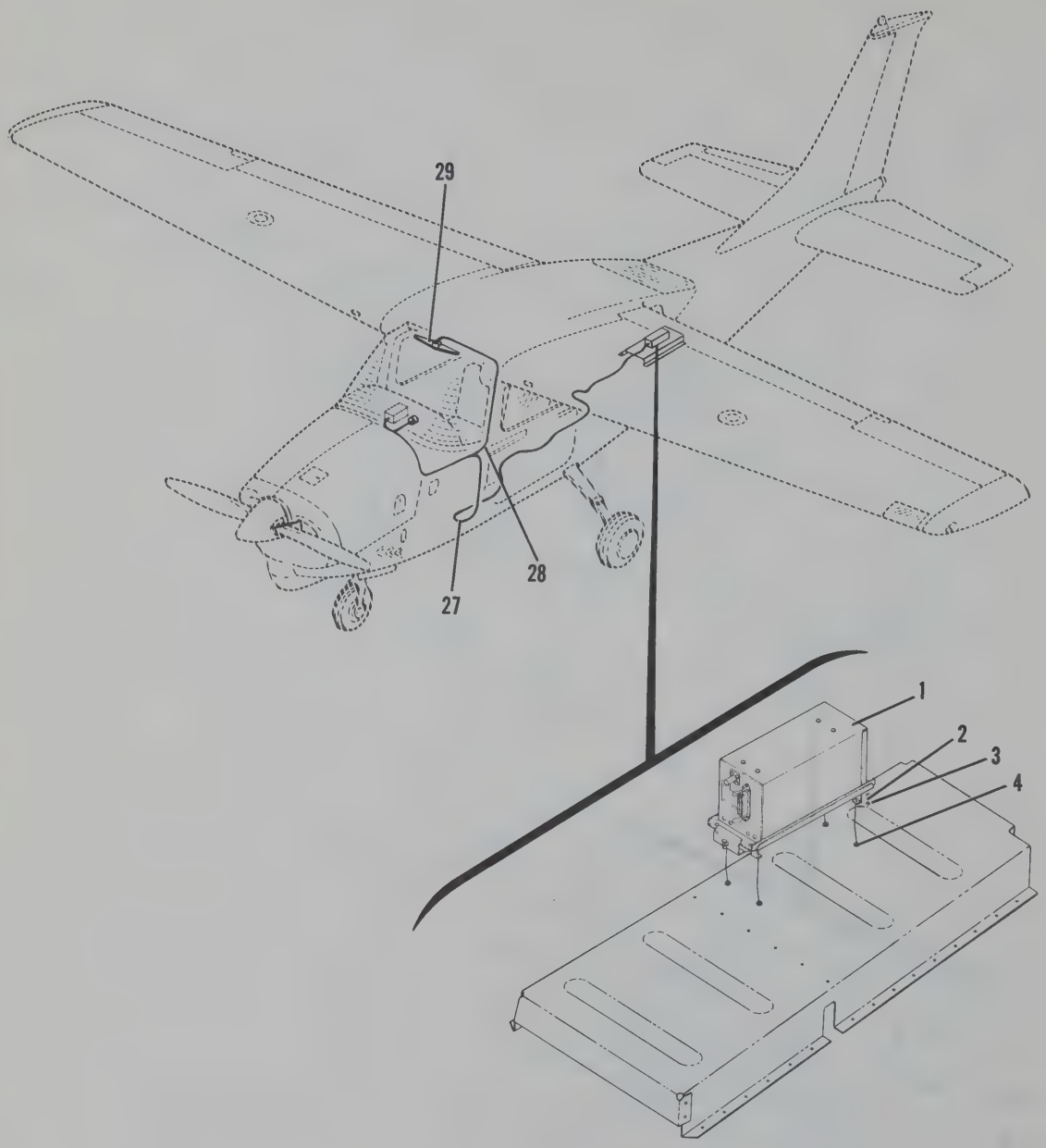

210 SERIAL 21059062 & ON
T210 SERIAL T210-0393 & ON

Figure 2-4. Narco (UGR-2) Glide Slope Receiver Installation (Sheet 8 of 8)

FIGURE AND INDEX NO.	PART NUMBER	DESCRIPTION 1 2 3 4 5 6 7	UNITS PER ASSY	USABLE ON CODE
2-4-		NARCO UGR-2 GLIDE SLOPE RADIO INSTALLATION	NP	
		ALL MODELS EXCEPT 188 & 337 SERIES		
- 1	UGR-2	RECEIVER - 20 CHANNEL NARO	1	
		ATTACHING PARTS		
- 2	AN515-8R16	SCREW 150, 172, 177, 182 & 210 SERIES ONLY	4	
- 3	AN936A8	WASHER 150, 172, 177, 182, 206 SERIES, 207 SERIES & 210 SERIES ONLY 8 REQD ON 206 SERIES & 207 SERIES ONLY	4	
- 4	S1648-08-75	NUT 150, 172, 182 & 210 SERIES ONLY	4	
- 4A	NAS1329-08-120	RIVNUT 177 ONLY	4	
- 5	AN515-8R7	SCREW 180 & 185 ONLY	4	
- 6	NAS679A08	NUT 180 & 185 ONLY	4	
- 7	0411059-3	SHOCKMOUNT 206 SERIES & 207 SERIES ONLY	4	
- 8	AN340B8	NUT 206 SERIES & 207 SERIES ONLY	8	
		---*---		
- 9	0412011-2	STIFFENER 150 ONLY	2	
- 10	0411547-2	SUPPORT - AFT 150 ONLY	1	
		ATTACHING PARTS		
- 11	AN515-8R8	SCREW 150 ONLY	2	
- 12	NAS679A08	NUT 150 ONLY	2	
		---*---		
- 13	0411547-1	SUPPORT - FWD 150 ONLY	1	
		ATTACHING PARTS		
- 14	AN515-8R8	SCREW 150 ONLY	2	
- 15	NAS679A08	NUT 150 ONLY	2	
		---*---		
- 16	0770713-1	ANGLE 180 & 185 ONLY	2	
		ATTACHING PARTS		
- 17	AN515-8R10	SCREW 180 & 185 ONLY	4	
- 18	S355	SPACER 180 & 185 ONLY	4	
- 19	NAS679A08	NUT 180 & 185 ONLY	4	
		---*---		
- 20	077C049-1	ANGLE 180 & 185 ONLY	1	
		ATTACHING PARTS		
- 21	AN515-8R10	SCREW 180 & 185 ONLY	2	
- 22	S355	SPACER 180 & 185 ONLY	2	
- 23	NAS679A08	NUT 180 & 185 ONLY	2	
		---*---		
- 24	127C627-56	ATTACH ANGLE 206 SERIES & 207 SERIES ONLY	2	
		ATTACHING PARTS		
- 25	AN520-10R6	SCREW 206 SERIES & 207 SERIES ONLY	4	
- 26	NAS679A3	NUT 206 SERIES & 207 SERIES ONLY	4	
		---*---		
- 27		CABLE ASSY UGR-2 RCVR TO MK12A RCVR AND VOA-9 INDICATOR -	NP	
	41291-101	CONNECTOR - 24 PIN - CONNECTS TO UGR-2 RCVR NARO	1	
	470 OHM, 1/4W	RESISTOR - CONNECTS TO PINS 14 & 18 ON UGR-2 RCVR	1	
	1000 OHM, 1/4W	RESISTOR - CONNECTS TO PINS 19 & 23 ON UGR-2 RCVR	1	
	41247-102	CONNECTOR - CONNECTS TO MK12A PIG TAIL CONNECTOR MRA-14S -- NARO	1	
	41223-2	PLUG - CONNECTS TO VOA-9 INDICATOR NARO	1	
	41228-6	CLAMP - CONNECTS TO VOA-9 INDICATOR NARO	1	
- 28		CABLE ASSY UGR-2 RCVR TO GLIDE SLOPE ANTENNA	1	
	RG-58A/U	COAXIAL CABLE - BULK ITEM	AR	
	UG-88C/U	PLUG - CONNECTS TO UGR-2 RCVR	1	
- 29	SEE FIG 3-3	GLIDE SLOPE ANTENNA INSTALLATION	1	

SECTION III

ANTENNA SYSTEMS

TABLE OF CONTENTS

Figure	Equipment	Page
3-1	VHF Antenna Installations	3-2
3-2	Omni Antenna Installations	3-4
3-3	Glide Slope Antenna Installations	3-9
3-4	Marker Beacon Antenna Installations	3-12
3-5	Medium & High Frequency Fixed Wire Antenna	3-15
3-6	ADF (Sense) Antenna Installation	3-18
3-7	Cessna 400 Transponder (Type A-105B) Antenna Installation	3-21
3-8	Cessna 300 Transponder (Type KA-28) Antenna Installation	3-22

VHF ANTENNA INSTALLATIONS

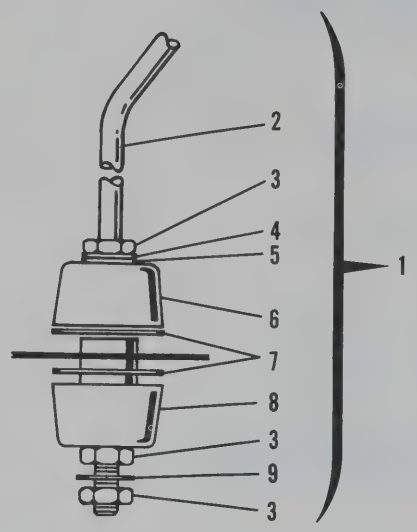

INSTALLATION **A**
MODEL 150 ONLY

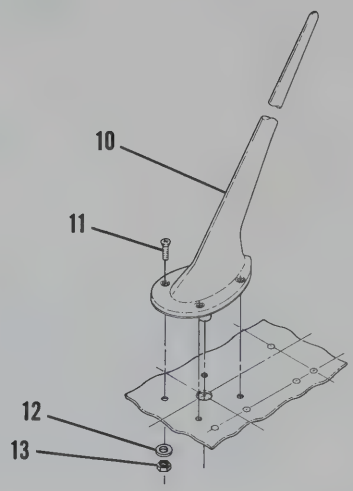

INSTALLATION **B**
ALL MODELS EXCEPT 337

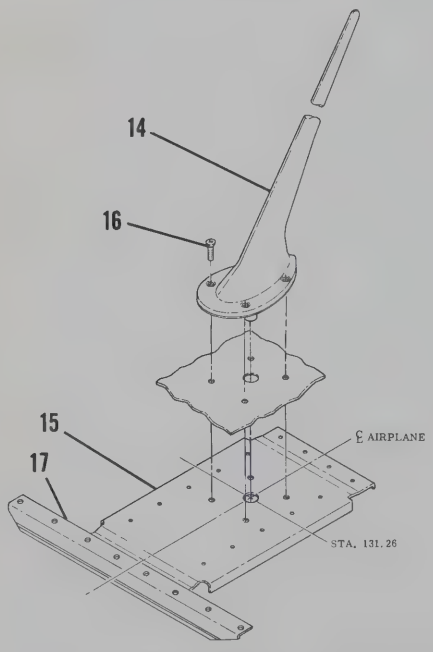

INSTALLATION **C**
MODEL 337 STANDARD LOCATION

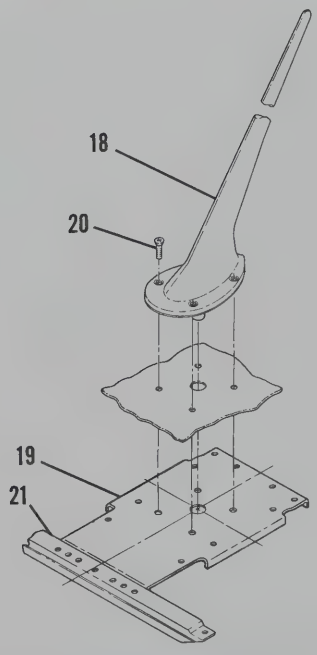

INSTALLATION **D**
MODEL 337 ALTERNATE LOCATION

Figure 3-1. VHF Antenna Installations

FIGURE AND INDEX NO.	PART NUMBER	DESCRIPTION 1 2 3 4 5 6 7	UNITS PER ASSY	USABLE ON CODE
3-1-		VHF ANTENNA INSTALLATIONS	NP	
		VHF ANTENNA INSTALLATION A MODEL 150 ONLY	NP	
- 1	1270042-1	VHF ANTENNA ASSEMBLY	1	
- 2	1270042-2	ANTENNA RCD	1	
		ATTACHING PARTS		
- 3	NAS345-10	NUT	3	
- 4	AN960-10L	WASHER-PLAIN	1	
- 5	S350	WASHER-SEALING	1	
- 6	X-88	BUSHING CNY	1	
- 7	1270043-1	WASHER-FIBER	2	
- 8	X-100	BUSHING CNY	1	
- 9	AN936A10	LOCKWASHER	1	
		---*---		
		VHF ANTENNA INSTALLATION B ALL MODELS EXCEPT 337 & T337 -	NP	
- 10	C598501-0101	VHF ANTENNA ASSEMBLY	1	A
	C598501-0102	VHF ANTENNA ASSEMBLY	1	B
		ATTACHING PARTS		
- 11	AN520-8R9	SCREW	4	
- 12	AN936A8	WASHER	4	
- 13	NAS679A08	NUT	4	
		---*---		
		VHF ANTENNA INSTALLATION C 337 & T337 STANDARD LOCATION -	NP	
- 14	C598501-0102	VHF ANTENNA ASSEMBLY	1	
		ATTACHING PARTS		
- 15	1511099-3	DOUBLER ASSY	1	
	1511099-2	DOUBLER	1	
	1570193-1	REINFORCEMENT L.H.	1	
	1570193-2	REINFORCEMENT R.H.	1	
	NAS686A08	NUTPLATE	4	
- 16	AN509-8R9	SCREW	4	
- 17	1470114-3	STIFFENER	1	
		---*---		
		VHF ANTENNA INSTALLATION D 337 & T337 ALTERNATE LOCATION	NP	
- 18	C598501-0102	VHF ANTENNA ASSEMBLY	1	
		ATTACHING PARTS		
- 19	157C014-3	DOUBLER ASSY	1	
	157C014-2	DOUBLER	1	
	1570192-1	REINFORCEMENT L.H.	1	
	1570192-2	REINFORCEMENT R.H.	1	
	NAS686A08	NUTPLATE	4	
- 20	AN509-8R9	SCREW	4	
- 21	147C008-3	STIFFENER	1	
		---*---		
		A---150 SERIAL THRU 15069981 F150 SERIAL THRU F150-0471 172 SERIAL THRU 17257770 F172 SERIAL THRU F172-0623 FR172 SERIAL THRU FR172-0093 177 SERIAL THRU 17701308		
		B---150 SERIAL 15069982 & ON F150 SERIAL F150-0472 & ON 172 SERIAL 17257771 & ON F172 SERIAL F172-0624 & ON FR172 SERIAL FR172-0094 & ON 177 SERIAL 17701309 & ON ALL OTHER MODEL S-1969 & ON		

OMNI ANTENNA INSTALLATION

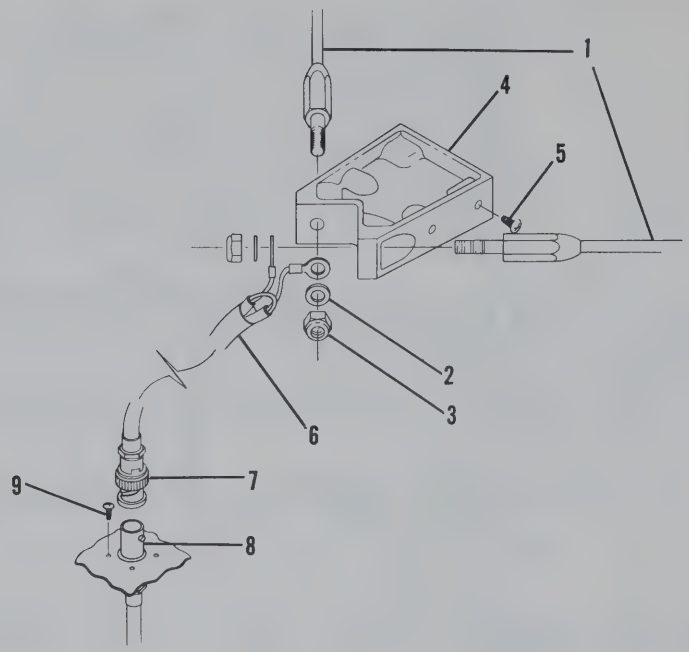

INSTALLATION **A** - MODEL 172 ONLY

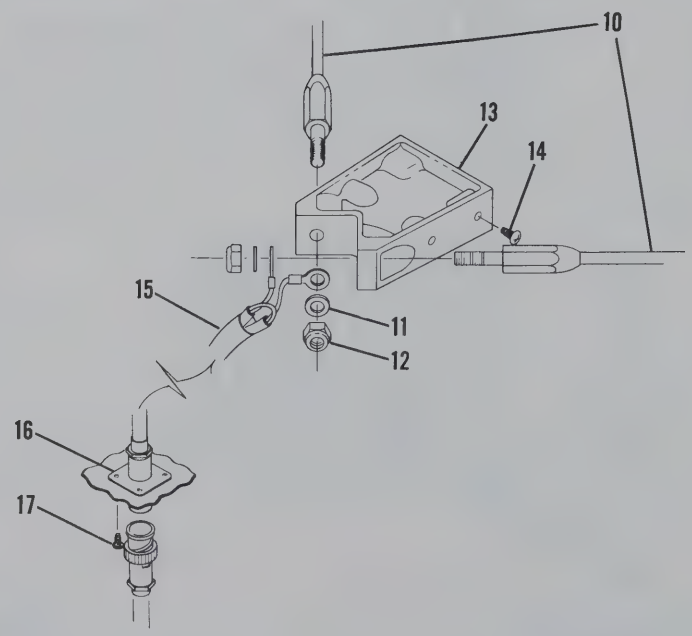

INSTALLATION **B** - ALL 182, 206 SERIES, 207 SERIES & 210 SERIES ONLY

Figure 3-2. Omni Antenna Installation (Sheet 1 of 3)

OMNI ANTENNA INSTALLATION

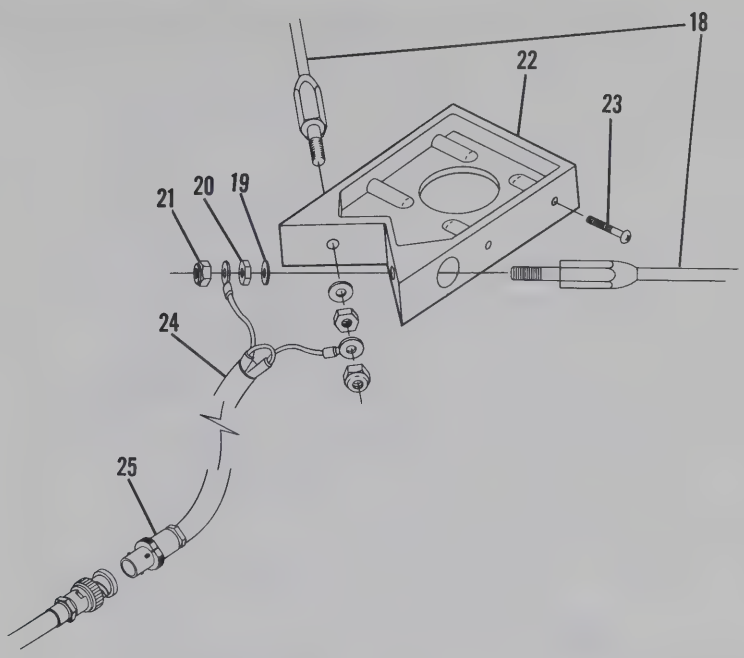

INSTALLATION C -MODEL 337 ONLY

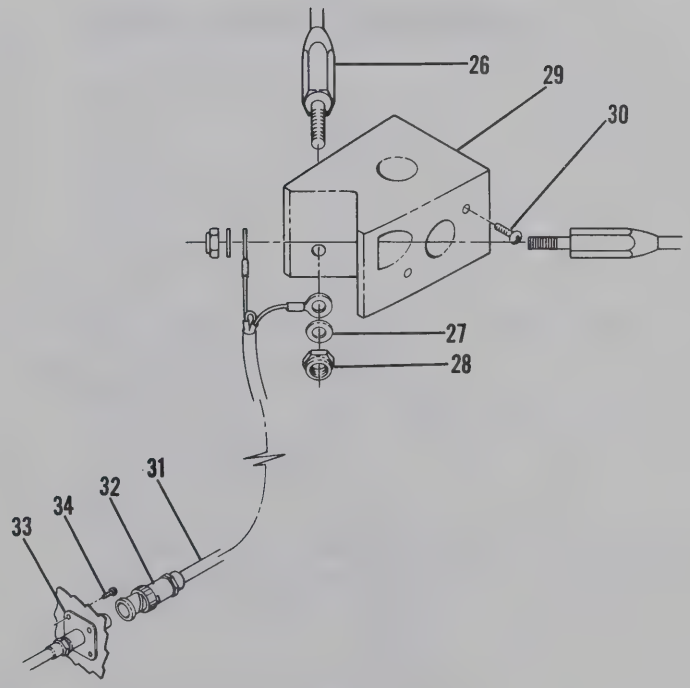

INSTALLATION D - MODEL 150 ONLY

Figure 3-2. Omni Antenna Installation (Sheet 2 of 3)

OMNI ANTENNA INSTALLATION

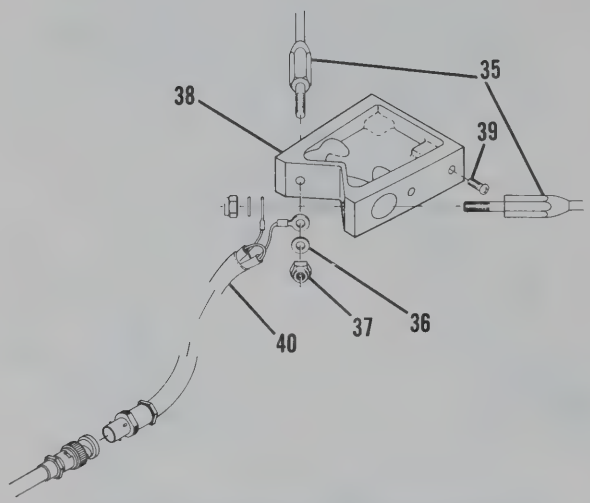

INSTALLATION **E** MODEL 177 ONLY

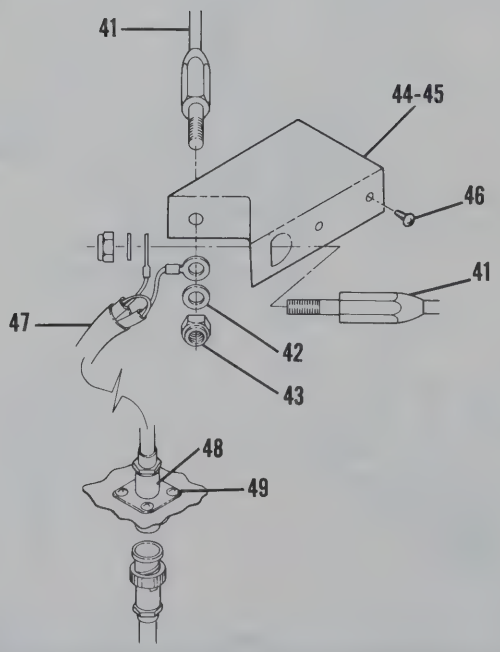

INSTALLATION **F** MODELS 180 & 185 ONLY

Figure 3-2. Omni Antenna Installation (Sheet 3 of 3)

FIGURE AND INDEX NO.	PART NUMBER	DESCRIPTION 1 2 3 4 5 6 7	UNITS PER ASSY	USABLE ON CODE
3-2-		OMNI ANTENNA INSTALLATIONS	NP	
		OMNI - ANTENNA INSTALLATION A MODEL 172 ONLY	NP	
- 1	127C012-1	ROD - ANTENNA STRAIGHT	2	
		ATTACHING PARTS		
- 2	AN960-10L	WASHER	2	
- 3	NAS679A3	NUT	2	
		---*---		
- 4	057C026-1	BLOCK - MOUNTING	1	
		ATTACHING PARTS		
- 5	S1021Z8-6	SCREW	4	
		---*---		
- 6	C57C013-1	BALUN STUB ASSY	1	
- 7	UG-88C/U	PLUG - COAXIAL	1	
- 8	UG-291/U	PLUG - COAXIAL	1	
		ATTACHING PARTS		
- 9	AN520-3R4	SCREW	4	
		---*---		
		OMNI - ANTENNA INSTALLATION B 182, 206 SERIES 207 SERIES	NP	
		AND 210 SERIES ONLY		
- 10	127C012-1	ROD - ANTENNA STRAIGHT	2	
		ATTACHING PARTS		
- 11	AN960-10L	WASHER	2	
- 12	NAS679A3	NUT	2	
		---*---		
- 13	C57C026-1	BLOCK - MOUNTING	1	
		ATTACHING PARTS		
- 14	S1021Z8-8	SCREW	4	
		---*---		
- 15	127C013-1	BALUN STUB ASSEMBLY	1	
- 16	UG-291/U	PLUG - COAXIAL	1	
		ATTACHING PARTS		
- 17	AN520-3R4	SCREW	4	
		---*---		
		OMNI - ANTENNA INSTALLATION C 337 & T337 ONLY	NP	
- 18	127C012-1	ROD - ANTENNA STRAIGHT	2	
		ATTACHING PARTS		
- 19	AN960-10	WASHER	2	
- 20	AN345-10	NUT	2	
- 21	NAS679A3	NUT	2	
		---*---		
- 22	147C060-1	BLOCK - MOUNTING	1	
		ATTACHING PARTS		
- 23	S1021Z8-8	SCREW	4	
		---*---		
- 24	127C013-1	BALUN STUB ASSY	1	
- 25	UG-89/U	PLUG - COAXIAL	1	
		OMNI - ANTENNA INSTALLATION D MODEL 150 ONLY	NP	
- 26	127C012-8	ROD - ANTENNA STRAIGHT	2	
		ATTACHING PARTS		
- 27	AN960-10L	WASHER	2	
- 28	NAS679A3	NUT	2	
		---*---		
- 29	0431016-1	BLOCK - MOUNTING	1	
		ATTACHING PARTS		
- 30	S1021Z6-8	SCREW	3	
		---*---		
- 31	057C013-3	BALUN STUB ASSY	1	
- 32	UG-88C/U	PLUG - COAXIAL	1	
- 33	UG-291/U	PLUG - COAXIAL	1	
		ATTACHING PARTS		
- 34	AN515-3R4	SCREW	4	
		---*---		

CONTINUED ON NEXT PAGE

FIGURE AND INDEX NO.	PART NUMBER	DESCRIPTION 1 2 3 4 5 6 7	UNITS PER ASSY	USABLE ON CODE
3-2-		OMNI ANTENNA INSTALLATION E MODEL 177 ONLY		
- 35	1270012-1	ROD - ANTENNA ASSEMBLY STRAIGHT	2	
		ATTACHING PARTS		
- 36	AN960-10L	WASHER	2	
- 37	NAS679A3	NUT	2	
		---*---		
- 38	1770003-1	BLOCK-MOUNTING	1	
		ATTACHING PARTS		
- 39	S1021Z8-8	SCREW	4	
		---*---		
- 40	1270013-1	BALUN STUB	1	
		OMNI ANTENNA INSTALLATION F MODELS 180 & 185 ONLY		
- 41	1270012-1	ROD - ANTENNA STRAIGHT	2	
		ATTACHING PARTS		
- 42	AN960-10L	WASHER	2	
- 43	NAS679A3	NUT	2	
		---*---		
- 44	0770110-2	BLOCK - MOUNTING 180 ONLY	1	
- 45	0770110-1	BLOCK - MOUNTING 185 ONLY	1	
		ATTACHING PARTS		
- 46	S1021Z-8	SCREW	4	
		---*---		
- 47	1270013-1	BALUN STUB ASSEMBLY	1	
- 48	UG-291/U	PLUG - COAXIAL	1	
		ATTACHING PARTS		
- 49	AN520-3R4	SCREW	4	
		---*---		

GLIDE SLOPE ANTENNA INSTALLATION

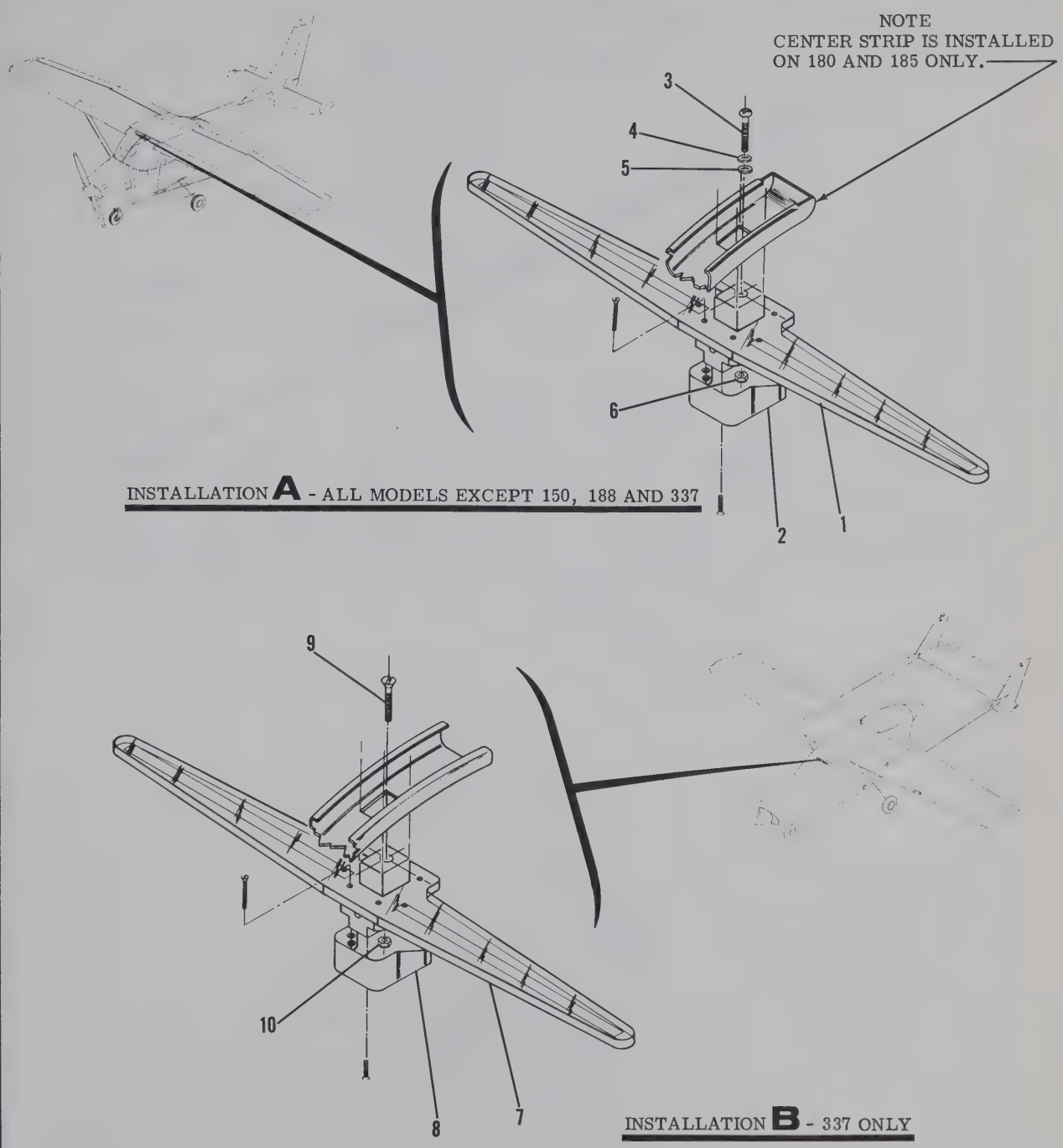

Figure 3-3. Glide Slope Antenna Installation (Sheet 1 of 2)

GLIDE SLOPE ANTENNA INSTALLATION

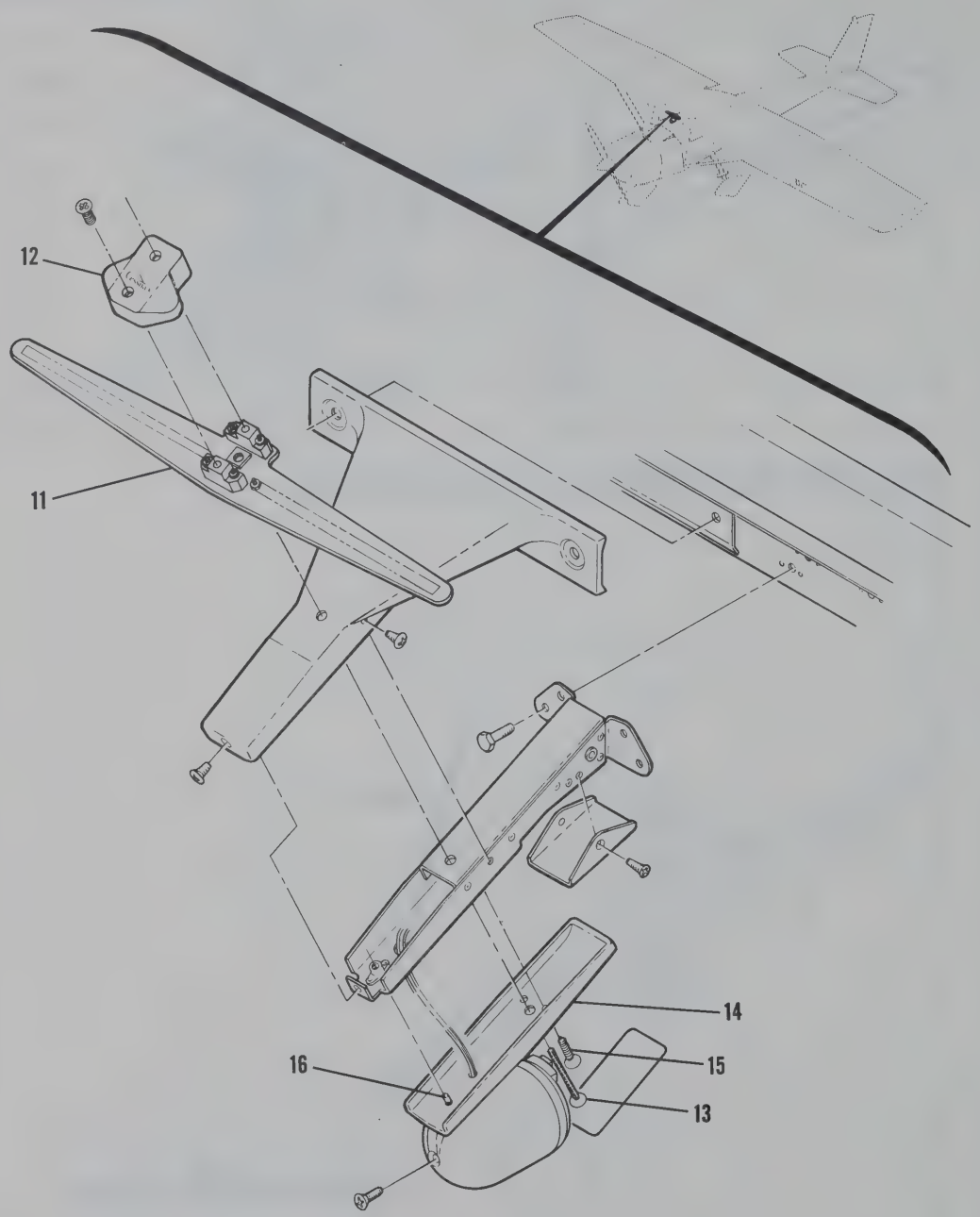

INSTALLATION **C** - 150 ONLY

Figure 3-3. Glide Slope Antenna Installation (Sheet 2 of 2)

FIGURE AND INDEX NO.	PART NUMBER	DESCRIPTION 1 2 3 4 5 6 7	UNITS PER ASSY	USABLE ON CODE
3-3-		UHF GLIDE SLOPE ANTENNA INSTALLATIONS	NP	
		UHF GLIDE SLOPE ANTENNA INSTALLATION A ALL MODELS EXCEPT 150, 188 & 337	NP	
- 1	1200098-1	GLIDE SLOPE ANTENNA ASSEMBLY	1	
- 2	1200096-1	COVER	1	
		ATTACHING PARTS		
- 3	NAS221-22	SCREW 172, 177, 182, 206 SERIES, 207 SERIES & 210 SERIES ONLY	1	
	AN520-10R22	SCREW 180 & 185 ONLY	1	
- 4	AN960-10L	WASHER	1	
- 5	S350	WASHER	1	
- 6	NAS679A3	NUT	1	
		---*---		
		UHF GLIDE SLOPE ANTENNA INSTALLATION B 337 & T337 ONLY	NP	
- 7	1200098-1	GLIDE SLOPE ANTENNA ASSEMBLY	1	
- 8	1200096-1	COVER	1	
		ATTACHING PARTS		
- 9	AN509-10R32C	SCREW	1	
- 10	NAS697A3	NUT	1	
		---*---		
		UHF GLIDE SLOPE ANTENNA INSTALLATION C MODEL 150 ONLY	NP	
- 11	1200098-2	GLIDE SLOPE ANTENNA ASSEMBLY	1	
- 12	1200096-1	COVER	1	
		ATTACHING PARTS		
- 13	AN507B832R20	SCREW	1	
		---*---		
- 14	0713813-3	COMPASS MOUNT	1	
		ATTACHING PARTS		
- 15	AN507B832R6	SCREW	2	
- 16	AN515B8R12	SCREW	1	
	AN960D8	WASHER	1	
		---*---		

MARKER BEACON ANTENNA INSTALLATIONS

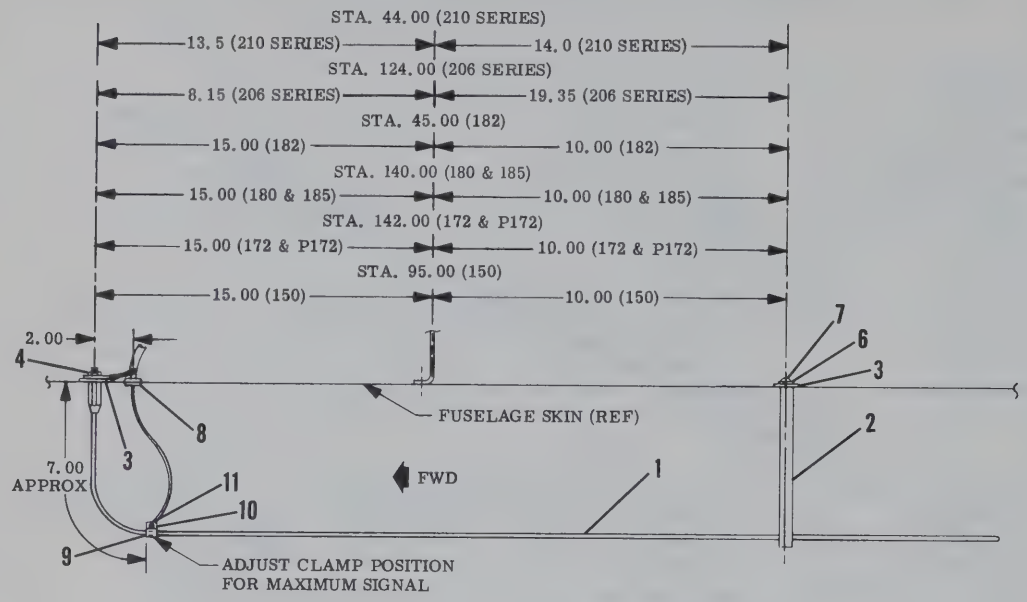

NOTES:
1. LOCATE ON ℄ OF SHIP FOR MODEL 172, 180 AND 185.
2. LOCATE AT .80 LBL. FOR MODEL 150.
3. LOCATE AT 4.00 LBL. FOR MODEL 206.
4. LOCATE AT 2.00 RBL. FOR MODEL 182 AND 210 SERIES.
5. ALL DIMENSIONS ARE IN INCHES.

INSTALLATION **A** - ALL MODELS EXCEPT 177, 188, 207 AND 337 SERIES

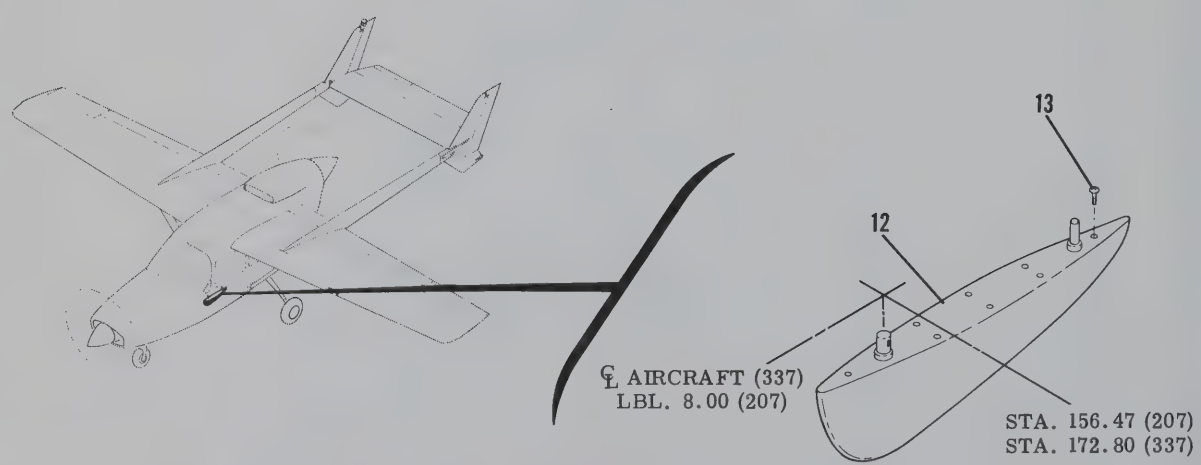

INSTALLATION **B** - MODEL 207 AND 337 SERIES ONLY

Figure 3-4. Marker Beacon Antenna Installations (Sheet 1 of 2)

MARKER BEACON ANTENNA INSTALLATION

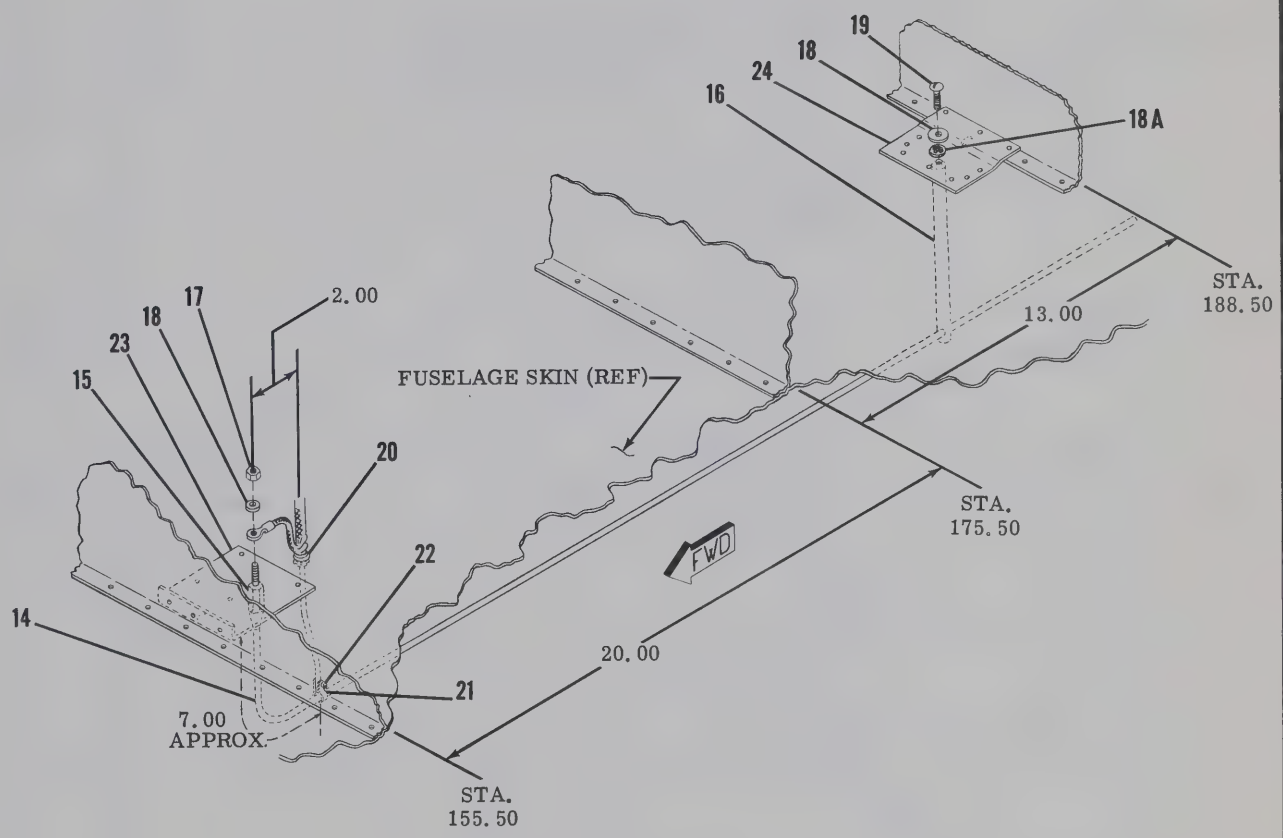

NOTES

1. LOCATE ON ℄ OF SHIP FOR MODEL 177.
2. ALL DIMENSIONS ARE IN INCHES.

INSTALLATION **C** - MODEL 177.

Figure 3-4 Marker Beacon Antenna Installation (Sheet 2 of 2)

FIGURE AND INDEX NO.	PART NUMBER	DESCRIPTION 1 2 3 4 5 6 7	UNITS PER ASSY	USABLE ON CODE
3-4-		MARKER BEACON ANTENNA INSTALLATIONS	NP	
		MARKER BEACON ANTENNA INSTALLATION A	NP	
		ALL MODELS EXCEPT 188, 337 & T337		
	0770681-1	ANTENNA ROD ASSEMBLY	1	
- 1	0770681-2	ANTENNA ROD	1	
- 2	0770681-3	SUPPORT - PHENOLIC	1	
	127C012-7	SLEEVE	1	
		ATTACHING PARTS		
- 3	AN970-3	WASHER	1	
- 4	NAS679A3	NUT	1	
- 5	AN970-3	WASHER	1	
- 6	AN936A10	WASHER	1	
- 7	AN520-10R12	SCREW	1	
		---*---		
- 8	MS35489-2S	GROMMET	1	
- 9	AN742D3	CLAMP	1	
		ATTACHING PARTS		
- 10	AN515-8R6	SCREW	1	
- 11	NAS679A08	NUT	1	
		---*---		
		MARKER BEACON ANTENNA INSTALLATION B 337 & T337 ONLY	NP	
- 12	24810-0100	MARKER BEACON ANTENNA ARC	1	
		ATTACHING PARTS		
- 13	AN515-8R6	SCREW	8	
		---*---		
		MARKER BEACON ANTENNA INSTALLATION C 177 ONLY		
	077C681-1	ANTENNA ROD ASSEMBLY	1	
- 14	077C681-2	ANTENNA ROD	1	
- 15	077C681-7	SLEEVE	1	
- 16	077C681-3	SUPPORT	1	
		ATTACHING PARTS		
- 17	NAS679A3	NUT	1	
- 18	AN970-3	WASHER	2	
- 19	AN515-8R6	SCREW	1	
		---*---		
- 20	MS35489-2S	GROMMET	1	
- 21	AN742D3	CLAMP	1	
		ATTACHING PARTS		
	AN515-8R6	SCREW	1	
- 22	NAS679A08	NUT	1	
		---*---		
- 23	1712097-3	DOUBLER	1	
- 24	1712097-2	DOUBLER	1	

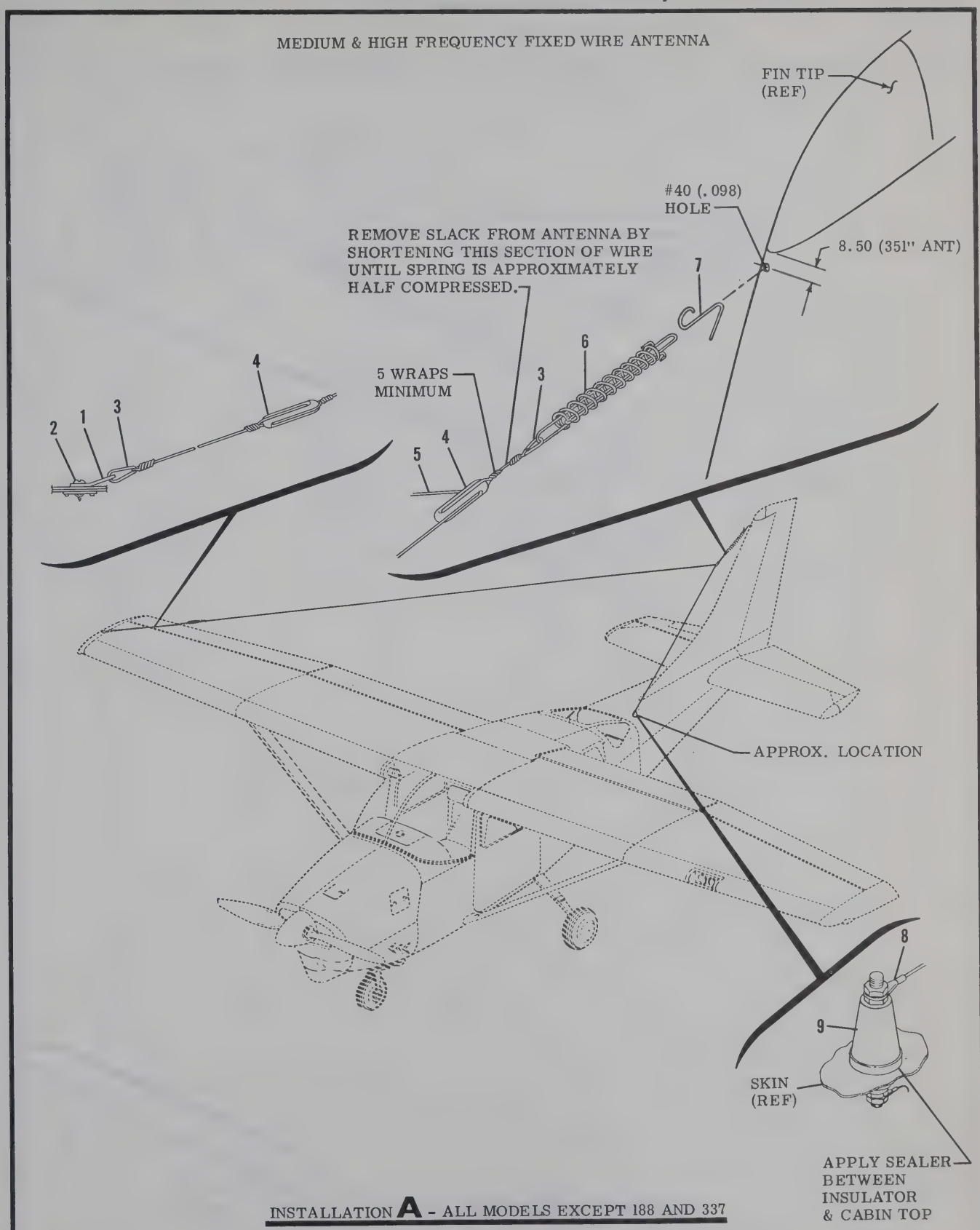

Figure 3-5. Medium & High Frequency Fixed Wire Antenna (Sheet 1 of 2)

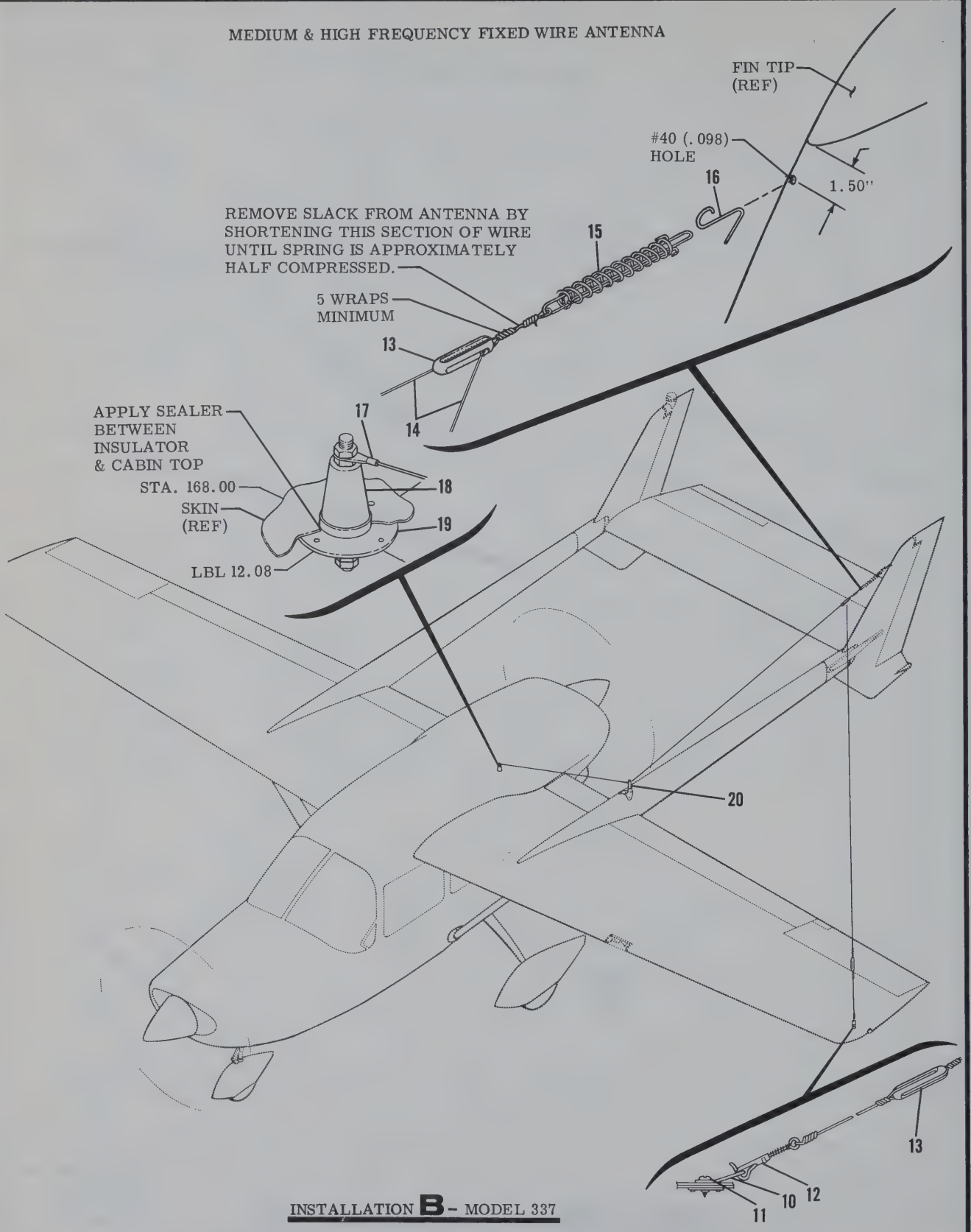

Figure 3-5. Medium & High Frequency Fixed Wire Antenna (Sheet 2 of 2)

FIGURE AND INDEX NO.	PART NUMBER	DESCRIPTION 1 2 3 4 5 6 7	UNITS PER ASSY	USABLE ON CODE
3-5-		MF & HF FIXED WIRE ANTENNA INSTALLATIONS ----------	MP	
		MF & HF ANTENNA INSTL. A ALL MODELS EXCEPT 188, 337 & T337 ----------	NP	
- 1	0511104-19	BRACKET ----------	1	
		ATTACHING PARTS		
- 2	S1021Z8-10	SCREW ----------	1	
		---*---		
- 3	AN1C0-3	THIMBLE - WIRE CABLE ----------	2	
- 4	463	INSULATOR ----------	2	
- 5	W-1C6A	WIRE - ANTENNA SURFACE LENGTH TO BE 351 OR 140 INCHES -----	AR	
- 6	S1282-4	SPRING ----------	1	
- 7	0411686	CLIP ----------	1	
- 8	S1367-1-10	TERMINAL ----------	1	
- 9	135-40	INSULATOR FEED THRU ----------	1	
		MF & HF ANTENNA INSTL. B MODELS 337 & T337 ONLY ----------	NP	
- 10	0511104-19	BRACKET ----------	1	
		ATTACHING PARTS		
- 11	S1021Z8-10	SCREW ----------	1	
		---*---		
- 12	5930 1/2	HOOK NJ ----------	2	
- 13	463	INSULATOR ----------	2	
- 14	W-1C6A	WIRE - #18/30HS - ANT SURFACE LENGTH TO BE 34 FT 3 IN. ----	AR	
- 15	S1282-4	SPRING ----------	1	
- 16	0411686	CLIP ----------	1	
- 17	S1367-1-10	TERMINAL ----------	1	
- 18	135-40	INSULATOR ----------	1	
		ATTACHING PARTS		
- 19	1470082-4	DOUBLER ----------	1	
		---*---		
- 20	1470125-1	STANDOFF ASSEMBLY ----------	1	

ADF (SENSE) ANTENNA INSTALLATION

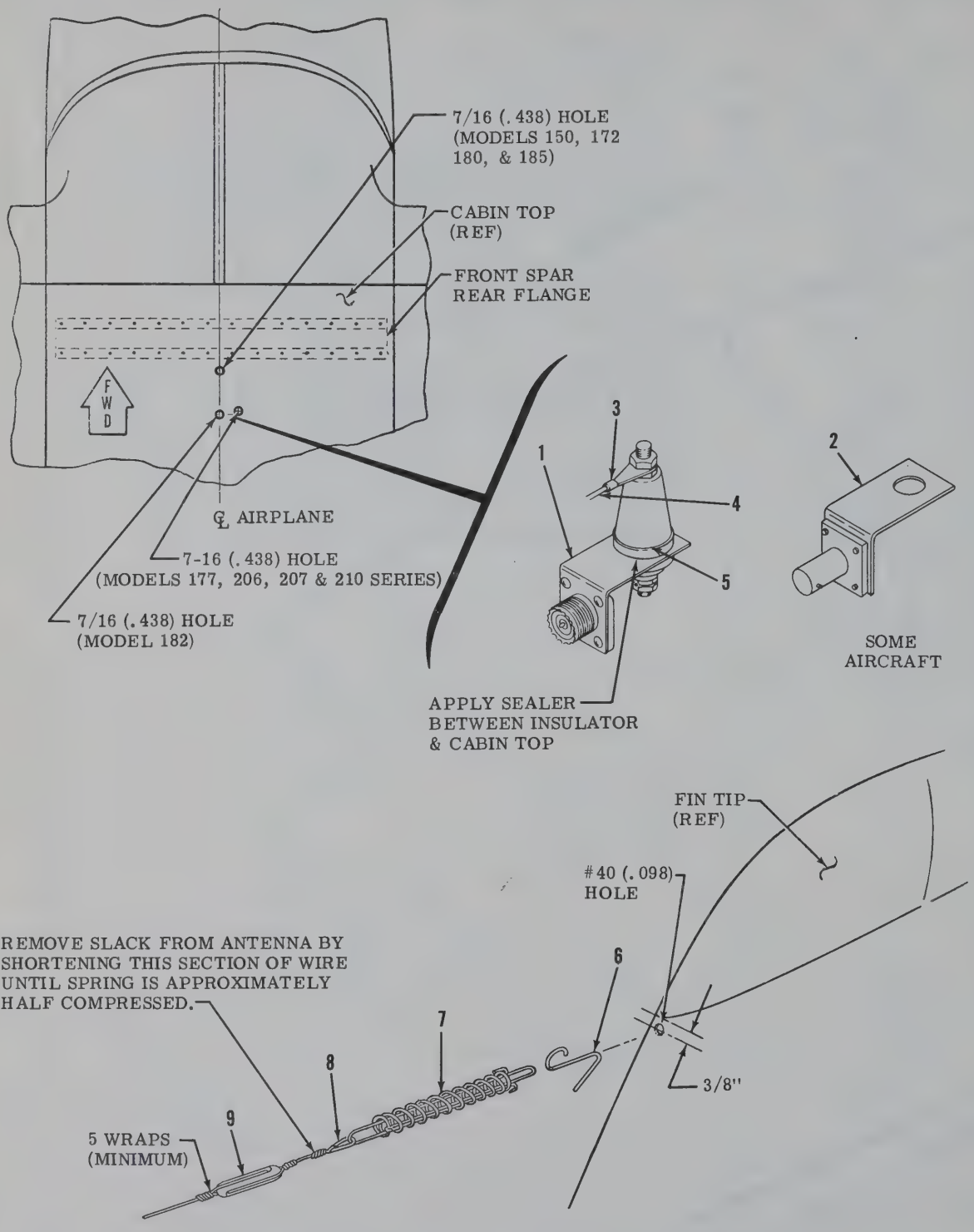

INSTALLATION **A**- ALL MODELS EXCEPT 188 & 337

Figure 3-6. ADF (Sense) Antenna Installation (Sheet 1 of 2)

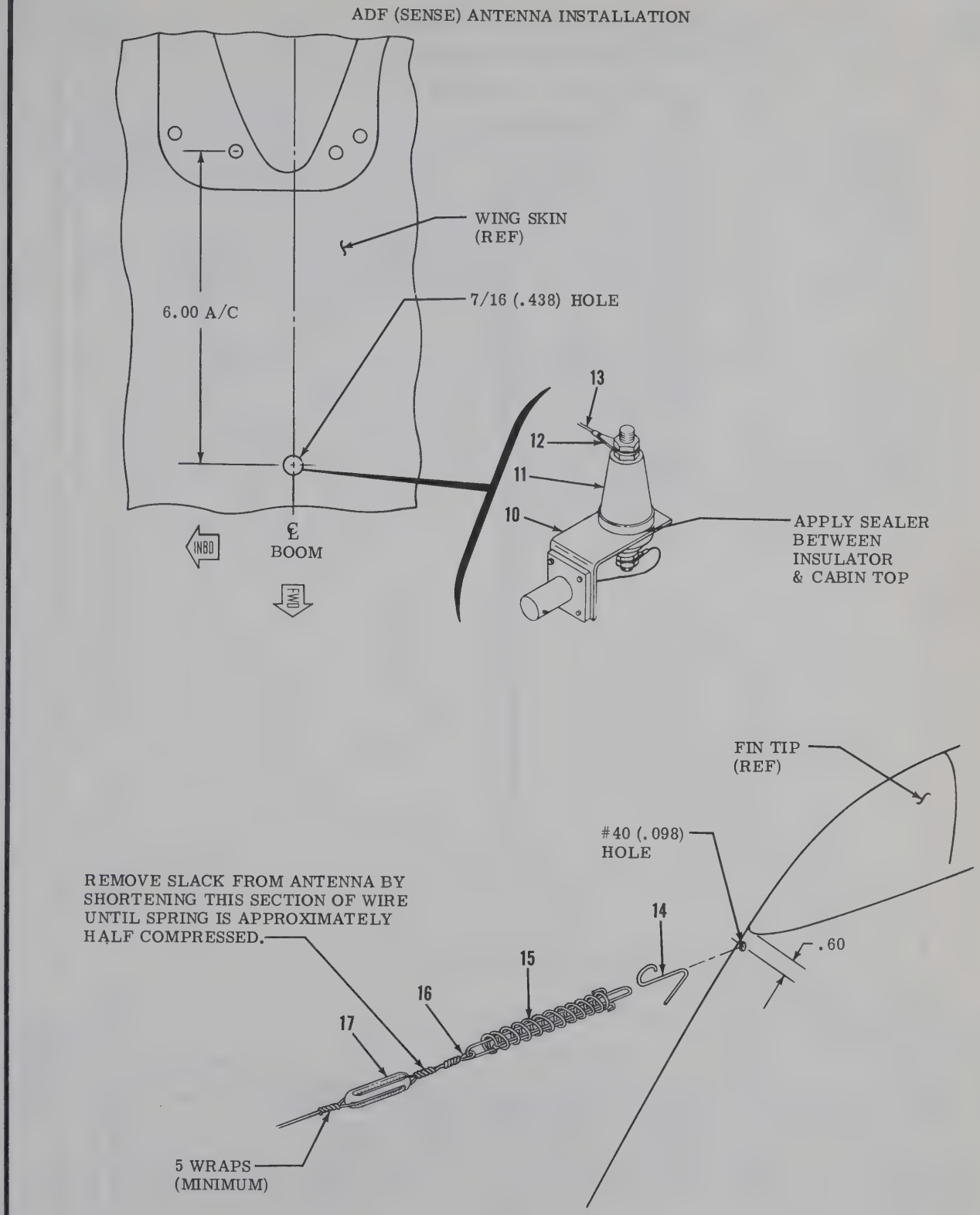

Figure 3-6. ADF (Sense) Antenna Installation (Sheet 2 of 2)

FIGURE AND INDEX NO.	PART NUMBER	DESCRIPTION 1 2 3 4 5 6 7	UNITS PER ASSY	USABLE ON CODE
3-6-		ADF SENSE ANTENNA INSTALLATIONS ----------	NP	
		ADF SENSE ANTENNA INSTALLATION A ALL MODELS EXCEPT 188, - 337 & T337	NP	
- 1	1270422-1	ANGLE - CONNECTOR ASSY USED ON SOME AIRCRAFT ----------	1	
	1270422-2	ANGLE ----------	1	
	SC-239	JACK - COAXIAL ----------	1	
- 2	1270444-1	ANGLE - CONNECTOR ASSY USED ON SOME AIRCRAFT ----------	1	
	1270444-2	ANGLE ----------	1	
	UG-290/U	RECEPTACLE - COAXIAL ----------	1	
- 3	S1367-1-10	TERMINAL ----------	1	
- 4	W-106A	WIRE - ADF SENSE ANTENNA 18 FEET REQD BULK ITEM ---	AR	
- 5	135-40	INSULATOR - FEED THRU ----------	1	
- 6	0411686	CLIP ----------	1	
- 7	S1282-4	SPRING ----------	1	
- 8	AN100-3	THIMBLE - WIRE CABLE ----------	1	
- 9	463	INSULATOR ----------	1	
		ADF SENSE ANTENNA INSTALLATION B 337 & T337 ONLY --------	NP	
- 10	1270444-1	ANGLE - CONNECTOR ASSY ----------	1	
- 11	135-40	INSULATOR - FEED THRU ----------	1	
- 12	S1367-1-8	TERMINAL ----------	1	
- 13	W-106A	WIRE #18/30 HS 20 FEET REQD BULK ITEM ----------	AR	
- 14	0411686	CLIP ----------	1	
- 15	S1282-4	SPRING ----------	1	
- 16	AN100-3	THIMBLE - WIRE CABLE ----------	1	
- 17	463	INSULATOR ----------	1	
		NOTE. LENGTH OF ANTENNA ON ALL MODELS IS 10 FT.		

CESSNA 400 TRANSPONDER ANTENNA INSTALLATION

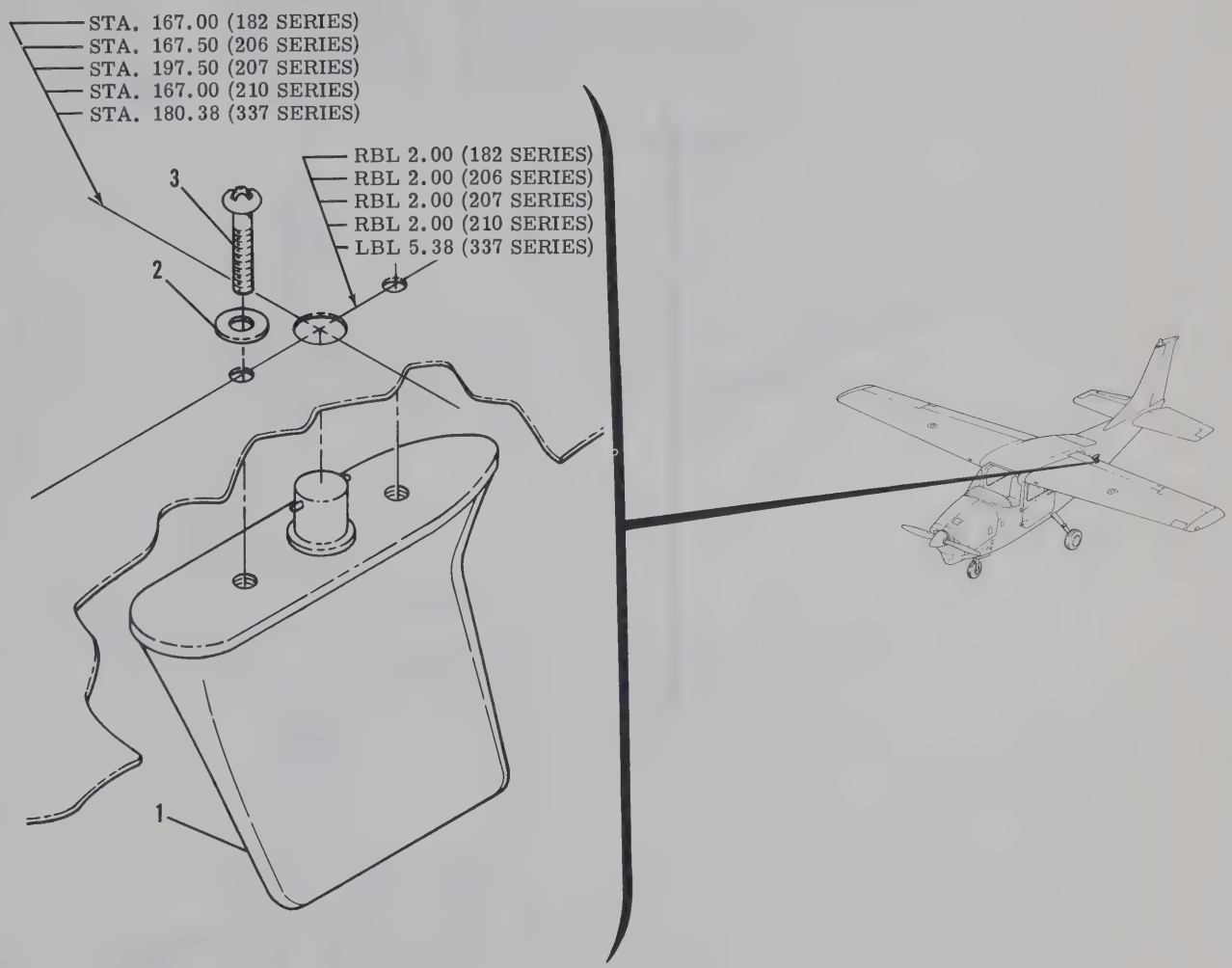

Figure 3-7. Cessna 400 Transponder (Type A-105B) Antenna Installation

FIGURE AND INDEX NO.	PART NUMBER	DESCRIPTION 1 2 3 4 5 6 7	UNITS PER ASSY	USABLE ON CODE
3-7-		CESSNA 400 ANTENNA INSTALLATION TYPE A-105B ----------	NP	
		182, 206 SERIES, 207 SERIES, 210 SERIES AND 337 SERIES ONLY		
- 1	34970-0000	ANTENNA TYPE A-105B ARC ----------	1	
		ATTACHING PARTS		
- 2	AN960-8L	WASHER ----------	2	
- 3	AN515-8R6	SCREW ----------	2	
		---*---		

CESSNA 300 TRANSPONDER ANTENNA INSTALLATION

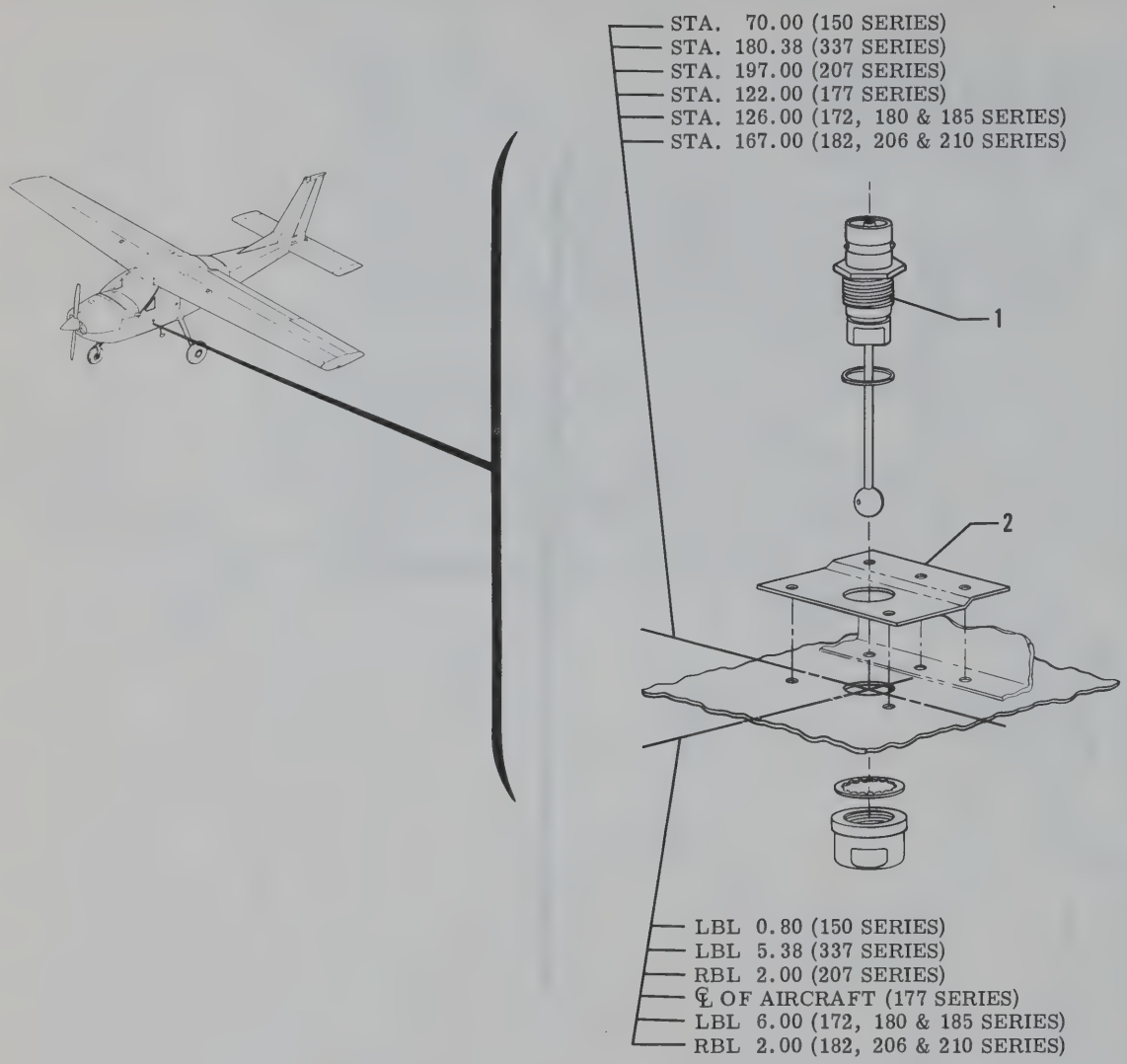

Figure 3-8. Cessna 300 Transponder (Type KA-28) Antenna Installation

FIGURE AND INDEX NO.	PART NUMBER	DESCRIPTION 1 2 3 4 5 6 7	UNITS PER ASSY	USABLE ON CODE
3-8-		CESSNA 300 TRANSPONDER ANTENNA INSTALLATION ---------- ALL MODELS EXCEPT 188	NP	
- 1	C589505-0101	ANTENNA ----------	1	
- 2	1712148-1	DOUBLER 177 ONLY ----------	1	
		---*---		

SECTION IV

AUDIO SYSTEMS

TABLE OF CONTENTS

Figure	Equipment	Page
4-1	Audio Isolation Amplifier & Selector Switch Installations	4-2
4-2	Speaker Installations	4-12
4-3	Cessna Crafted Microphone Installations & Service Parts	4-17
4-4	Headset Installation	4-27

AUDIO ISOLATION AMPLIFIER & SELECTOR SWITCH INSTALLATION

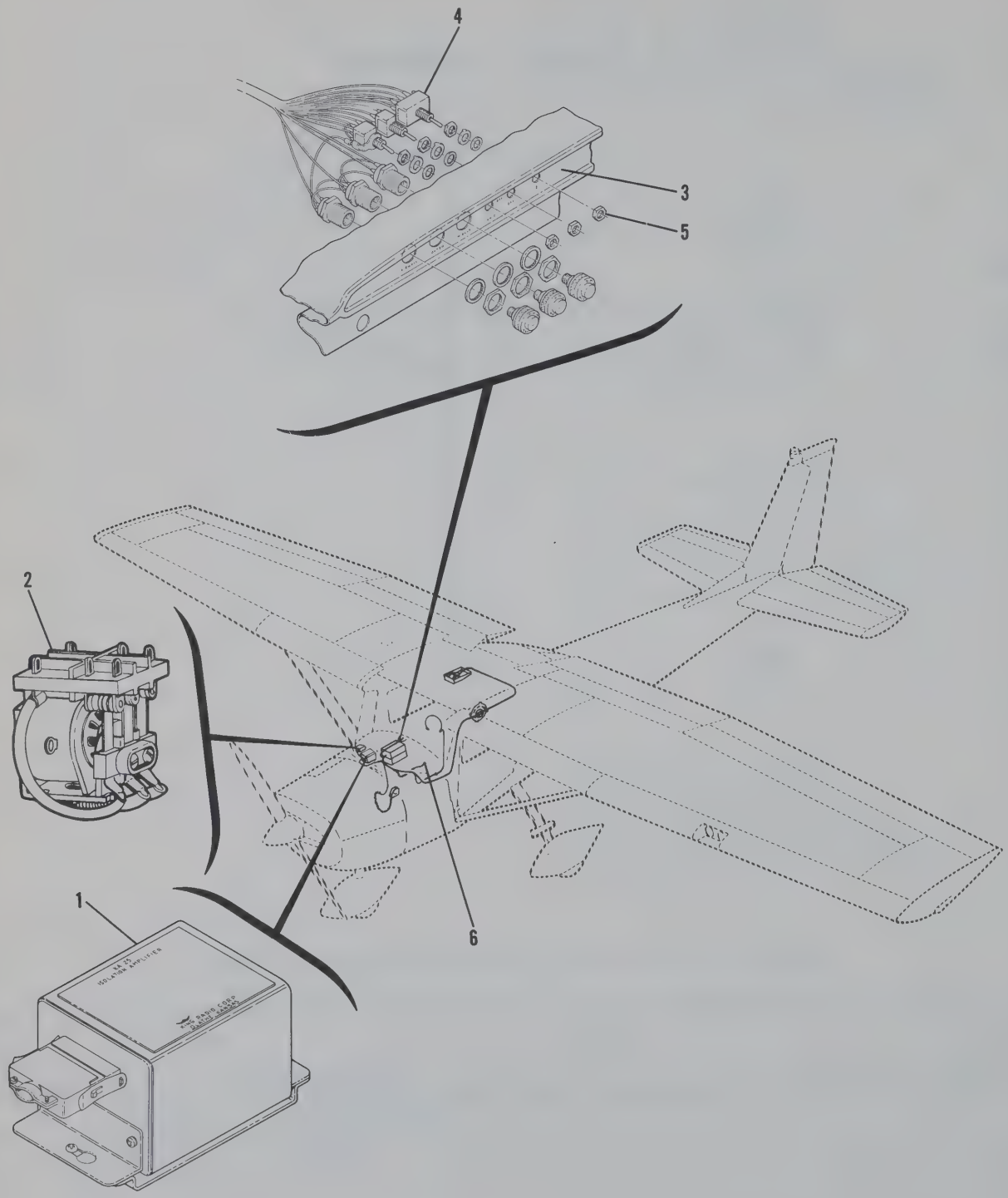

INSTALLATION **A** - MODEL 150 ONLY

Figure 4-1. Audio Isolation Amplifier & Selector Switch Installations (Sheet 1 of 6)

AUDIO ISOLATION AMPLIFIER & SELECTOR SWITCH INSTALLATION

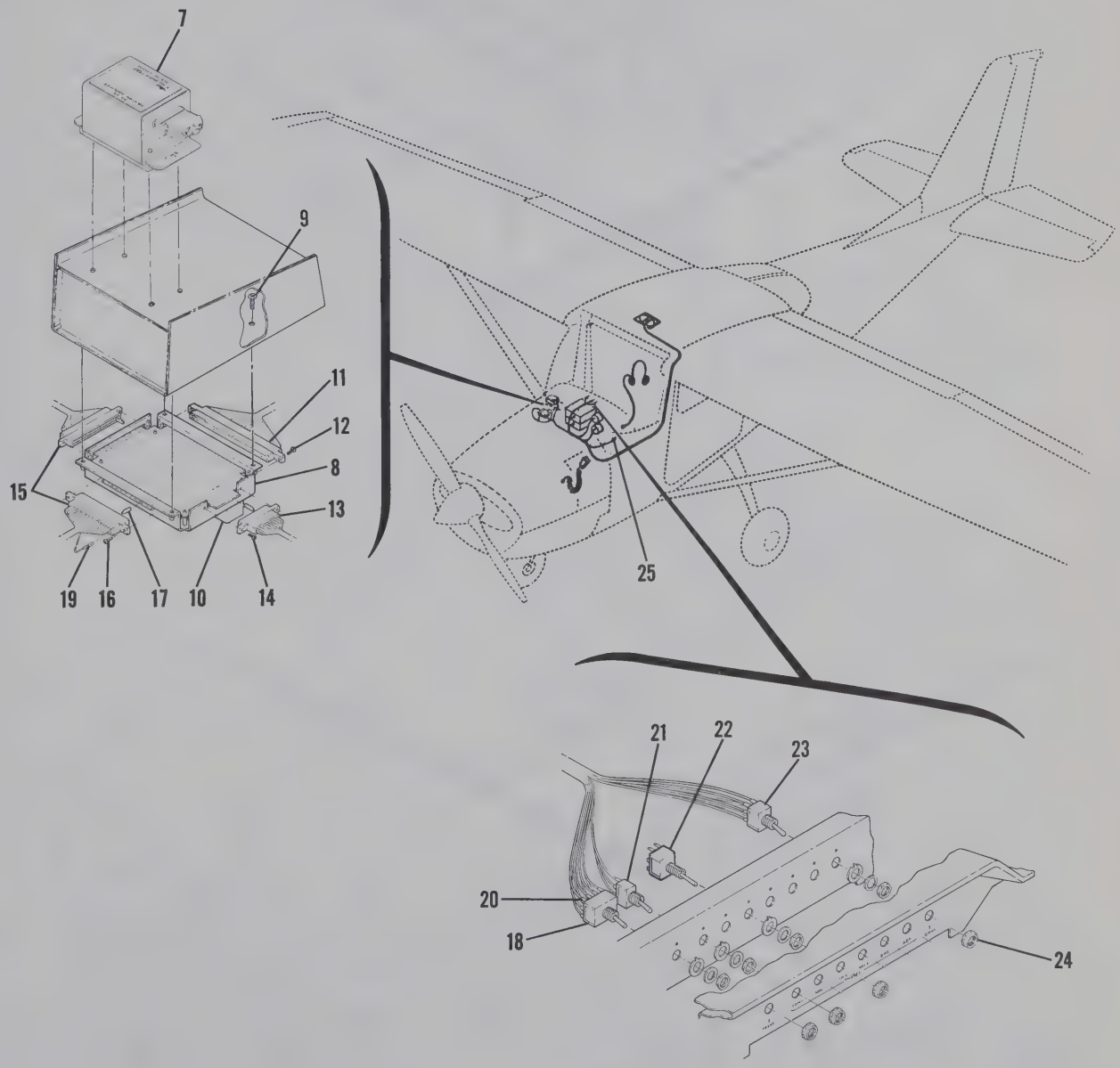

INSTALLATION **B** - MODEL 172 ONLY

Figure 4-1. Audio Isolation Amplifier & Selector Switch Installations (Sheet 2 of 6)

AUDIO ISOLATION AMPLIFIER & SELECTOR SWITCH INSTALLATION

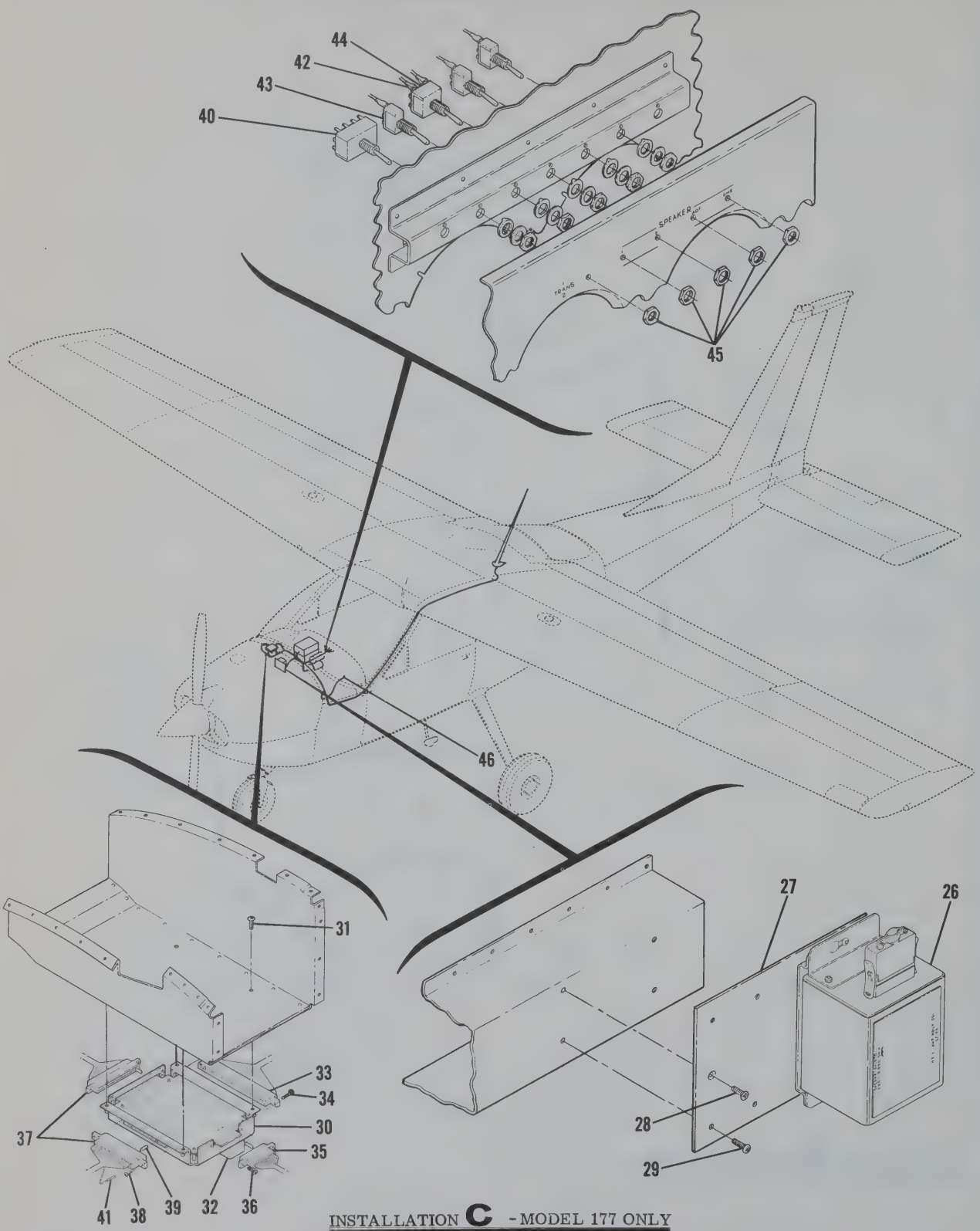

INSTALLATION C - MODEL 177 ONLY

Figure 4 - 1. Audio Isolation Amplifier & Slector Swich Installations (Sheet 3 of 6)

AUDIO ISOLATION AMPLIFIER & SELECTOR SWITCH INSTALLATION

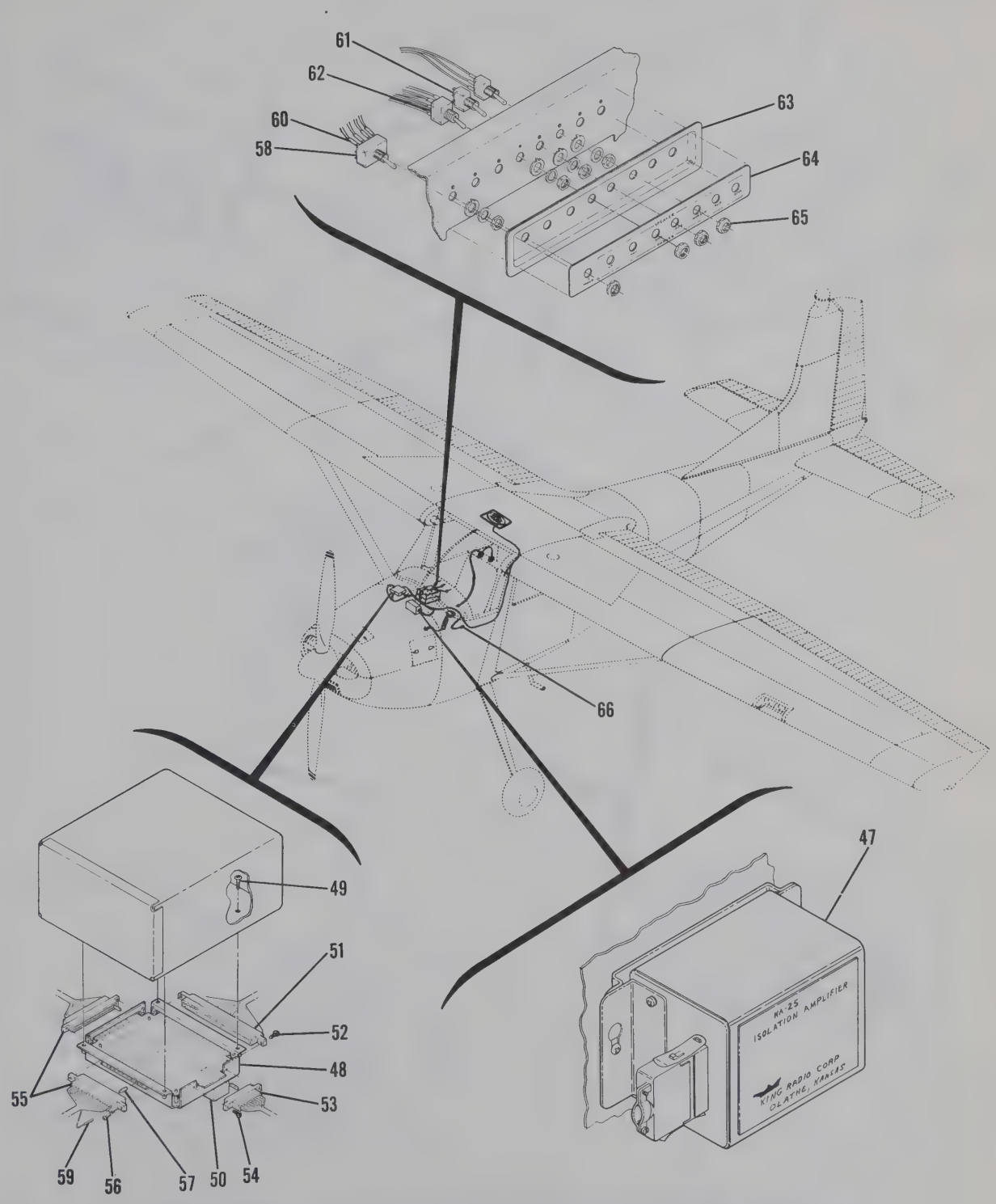

INSTALLATION **D** - MODELS 180 & 185 ONLY

Figure 4-1. Audio Isolation Amplifier & Selector Switch Installations (Sheet 4 of 6)

AUDIO ISOLATION AMPLIFIER & SELECTOR SWITCH INSTALLATION

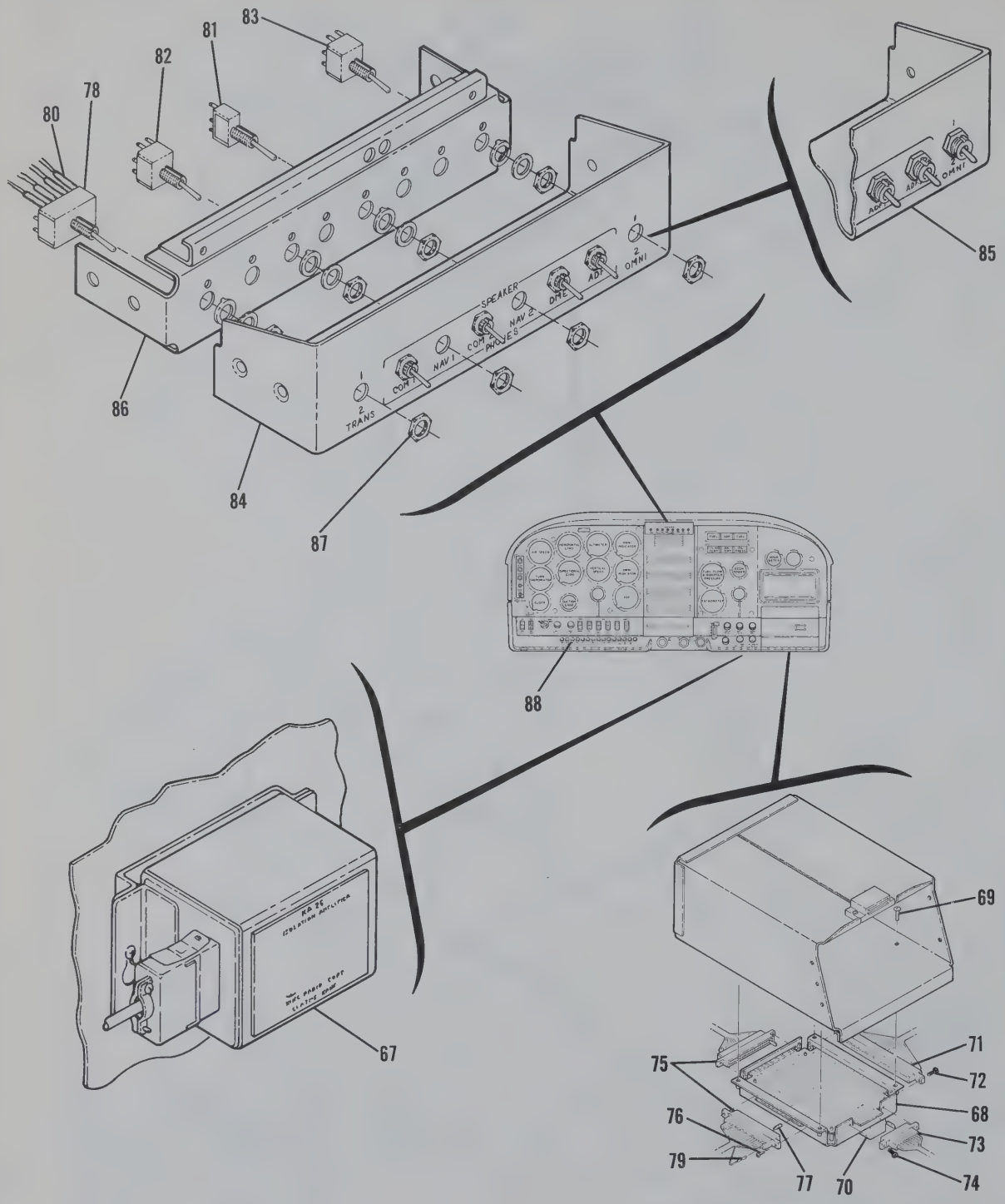

INSTALLATION **E** - MODELS 182, 206 SERIES, 207 SERIES & 210 SERIES ONLY

Figure 4-1. Audio Isolation Amplifier & Selector Switch Installations (Sheet 5 of 6)

AUDIO ISOLATION AMPLIFIER & SELECTOR SWITCH INSTALLATION

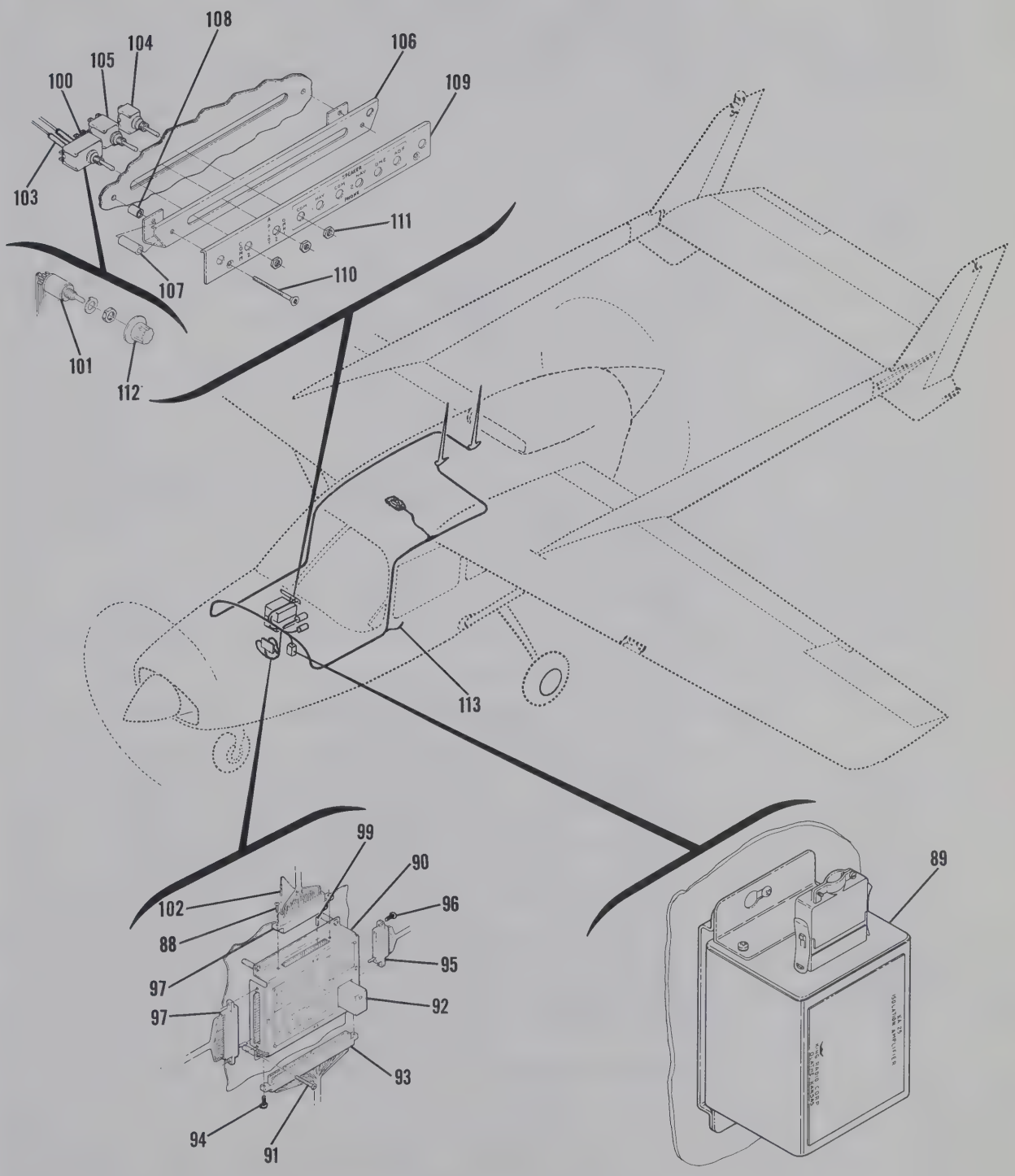

INSTALLATION **F** - MODELS 337 & T337 ONLY

Figure 4-1. Audio Isolation Amplifier & Selector Switch Installations (Sheet 6 of 6)

FIGURE AND INDEX NO.	PART NUMBER	DESCRIPTION 1 2 3 4 5 6 7	UNITS PER ASSY	USABLE ON CODE
4-1-		AUDIO ISOLATION AMPLIFIER & SELECTOR SWITCH INSTALLATION ------	NP	
		AUDIO ISOLATION AMPLIFIER & TRANSMITTER SELECTOR SWITCH -----	NP	
		INSTALLATION A 150 ONLY		
- 1	KA-25	KING ISOLATION AMPLIFIER NOT REQUIRED ON ----------	1	
		RADIOS WITH BUILT-IN AMPLIFIERS KG		
		ATTACHING PARTS		
	AN515-6R10	SCREW ----------	4	
	NAS43DD1-16	SPACER ----------	4	
	NAS697A06	NUT ----------	4	
		---*---		
- 2	1205-3C12D	RELAY-AUDIO MUTING GN ----------	1	
		ATTACHING PARTS		
	AN515-6R8	SCREW ----------	1	
		---*---		
- 3	0413467-4	TRIM PANEL PLACARD ----------	1	
- 4	S1697-1	SWITCH ----------	1	
- 5	S1216-3	NUT-DECORATIVE ----------	1	
- 6	S1360-5	CIRCUIT BREAKER ----------	1	
		AUDIO ISOLATION AMPLIFIER & TRANSMITTER SELECTOR SWITCH -----	NP	
		INSTALLATION B 172 ONLY		
- 7	KA-25	KING ISOLATION AMPLIFIER NOT REQUIRED ON ----------	1	
		RADIOS WITH BUILT-IN AMPLIFIER KG		
		ATTACHING PARTS		
	AN515-6R8	SCREW ----------	4	
	NAS697A06	NUT ----------	4	
		---*---		
- 8	0570084-1	JUNCTION BOX & CIRCUIT BOARD ASSY ----------	1	
		ATTACHING PARTS		
- 9	AN515-8R6	SCREW ----------	4	
		---*---		
- 10	S1813-2	RELAY ----------	1	
- 11	S1838-1	HOUSING 60 PIN ----------	1	
		ATTACHING PARTS		
- 12	AN515-6R8	SCREW ----------	2	
		---*---		
- 13	S1838-3	HOUSING 20 PIN ----------	1	
		ATTACHING PARTS		
- 14	AN515-4R8	SCREW ----------	2	
		---*---		
- 15	S1838-2	HOUSING 36 PIN ----------	2	
		ATTACHING PARTS		
- 16	AN515-4R6	SCREW ----------	2	
		---*---		
- 17	S1836-1	KEYING PLUG USED ON ITEMS 11 & 12 ONLY ONE EACH ---	3	
		REQD PER HOUSING		
		CABLE ASSY-TRANSMITTER SELECTOR SWITCH ----------	NP	
- 8	S1697-1	SWITCH-TRANSMITTER SELECTOR ----------	1	
- 19	S1837-1	TERMINAL ----------	AR	
- 20	S1694-3-0.5	SHRINK TUBING BULK ITEM ----------	AR	
		CABLE ASSY-SPEAKER/PHONE SELECTOR SWITCH ----------	NP	
- 21	S1695-2	SWITCH SINGLE POLE-DOUBLE THROW USED ONLY WITH --	1	
		RADIOS HAVING BUILT-IN ISOLATION AMPLIFIER		
- 22	S1696-1	SWITCH DOUBLE POLE-DOUBLE THROW USED ONLY WITH --	1	
		RADIOS NOT HAVING BUILT-IN ISOLATION AMPLIFIER		
	S1837-1	TERMINAL ----------	AR	
	S1694-3-0.5	SHRINK TUBING BULK ITEM ----------	AR	
		CABLE ASSY-OMNI SELECTOR SWITCH ----------	NP	
- 23	S1696-1	SWITCH DOUBLE POLE-DOUBLE THROW ----------	1	
	S1837-1	TERMINAL ----------	AR	
	S1694-3-0.5	SHRINK TUBING BULK ITEM ----------	AR	
- 24	S1216-3	NUT-DECORATIVE ----------	AR	
- 25	S1360-5	CIRCUIT BREAKER ----------	1	

CONTINUED ON NEXT PAGE

FIGURE AND INDEX NO.	PART NUMBER	DESCRIPTION 1 2 3 4 5 6 7	UNITS PER ASSY	USABLE ON CODE
4-1-		AUDIO ISOLATION AMPLIFIER & TRANSMITTER SELECTOR ----------	NP	
		SWITCH INSTALLATION C 177 ONLY		
- 26	KA-25	KING ISOLATION AMPLIFIER NOT REQUIRED ON ----------	1	
		RADIOS WITH BUILT-IN AMPLIFIER KG		
		ATTACHING PARTS		
- 27	177C012-1	SUPPORT PLATE ----------	1	
- 28	AN507-8R8	SCREW ----------	3	
	NAS679A08	NUT ----------	1	
- 29	AN515-8R8	SCREW ----------	5	
		---*---		
- 30	C57C084-1	JUNCTION BOX & CIRCUIT BOARD ASSY ----------	1	
		ATTACHING PARTS		
- 31	AN515-8R6	SCREW ----------	4	
		---*---		
- 32	S1813-2	RELAY ----------	1	
- 33	S1838-1	HOUSING 60 PIN ----------	1	
		ATTACHING PARTS		
- 34	AN515-6R8	SCREW ----------	2	
		---*---		
- 35	S1838-3	HOUSING 20 PIN ----------	1	
		ATTACHING PARTS		
- 36	AN515-4-8	SCREW ----------	2	
		---*---		
- 37	S1838-2	HOUSING 36 PIN ----------	2	
		ATTACHING PARTS		
- 38	AN515-4R6	SCREW ----------	2	
		---*---		
- 39	S1836-1	KEYING PLUG USED ON ITEM 31 & 32 ONLY ONE EACH ----	3	
		REQD PER HOUSING		
		CABLE ASSY-TRANSMITTER SELECTOR SWITCH ----------	NP	
- 40	S1697-1	SWITCH-TRANSMITTER SELECTOR ----------	1	
- 41	S1837-1	TERMINAL ----------	AR	
- 42	S1694-3-0.5	SHRINK TUBING BULK ITEM ----------	AR	
		CABLE ASSY-SPEAKER/PHONE SELECTOR SWITCH ----------	NP	
- 43	S1695-2	SWITCH SINGLE POLE-DOUBLE THROW USE ONLY WITH ---	1	
		RADIOS HAVING BUILT-IN ISOLATION AMPLIFIER		
- 44	S1696-1	SWITCH DOUBLE POLE-DOUBLE THROW USE ONLY WITH ---	1	
		RADIOS NOT HAVING BUILT-IN ISOLATION AMPLIFIER		
	S1837-1	TERMINAL ----------	AR	
	S1694-3-0.5	SHRINK TUBING BULK ITEM ----------	AR	
- 45	S1216-3	NUT-DECORATIVE ----------	AR	
- 46	S1360-5	CIRCUIT BREAKER ----------	1	
		AUDIO ISOLATION AMPLIFIER & TRANSMITTER SELECTOR SWITCH -----	NP	
		INSTALLATION D 180 & 185 ONLY		
- 47	KA-25	KING ISOLATION AMPLIFIER NOT REQUIRED ON ----------	1	
		RADIOS WITH BUILT-IN AMPLIFIERS KG		
		ATTACHING PARTS		
	AN515-6R8	SCREW ----------	4	
	NAS697A06	NUT ----------	4	
		---*---		
- 48	C57C084-1	JUNCTION BOX & CIRCUIT BOARD ASSY ----------	1	
		ATTACHING PARTS		
- 49	AN515-8R6	SCREW ----------	4	
		---*---		
- 50	S1813-2	RELAY ----------	1	
- 51	S1838-1	HOUSING 60 PIN ----------	1	
		ATTACHING PARTS		
- 52	AN515-6R8	SCREW ----------	2	
		---*---		
- 53	S1838-3	HOUSING 20 PIN ----------	1	
		ATTACHING PARTS		
- 54	AN515-4R8	SCREW ----------	2	
		---*---		
- 55	S1838-2	HOUSING 36 PIN ----------	2	
		ATTACHING PARTS		
- 56	AN515-4R6	SCREW ----------	2	
		---*---		

CONTINUED ON NEXT PAGE

FIGURE AND INDEX NO.	PART NUMBER	DESCRIPTION 1 2 3 4 5 6 7	UNITS PER ASSY	USABLE ON CODE
4-1- 57	S1836-1	KEYING PLUG USED ON ITEM 46 & 47 ONLY ONE EACH ---- REQD PER HOUSING	3	
		CABLE ASSY-TRANSMITTER SELECTOR SWITCH ----------	NP	
- 58	S1697-1	SWITCH-TRANSMITTER SELECTOR ----------	1	
- 59	S1837-1	TERMINAL ----------	AR	
- 60	S1694-3-0.5	SHRINK TUBING BULK ITEM ----------	AR	
		CABLE ASSY-SPEAKER/PHONE SELECTOR SWITCH ----------	NP	
- 61	S1695-2	SWITCH SINGLE POLE-DOUBLE THROW USED ONLY WITH -- RADIOS HAVING BUILT-IN ISOLATION AMPLIFIER	1	
- 62	S1696-1	SWITCH DOUBLE POLE-DOUBLE THROW USED ONLY WITH -- RADIOS NOT HAVING BUILT-IN ISOLATION AMPLIFIER	1	
	S1837-1	TERMINAL ----------	AR	
	S1694-3-0.5	SHRINK TUBING BULK ITEM ----------	AR	
- 63	0713917-9	PLATE ASSY ----------	1	
- 64	C713917-8	PLACARD ----------	1	
- 65	S1216-3	NUT-DECORATIVE ----------	AR	
- 66	S1360-5	CIRCUIT BREAKER ----------	1	
		AUDIO ISOLATION AMPLIFIER & TRANSMITTER SELECTOR SWITCH -----	NP	
		INSTALLATION E 182, 206 SERIES, 207 SERIES & 210 SERIES ONLY		
- 67	KA-25	KING ISOLATION AMPLIFIER NOT REQUIRED ON ---------- RADIOS WITH BUILT-IN AMPLIFIER KG ATTACHING PARTS	1	
	AN515-6R8	SCREW ----------	4	
	NAS697A06	NUT ----------	4	
		---*---		
- 68	C57C084-1	JUNCTION BOX & CIRCUIT BOARD ASSY ---------- ATTACHING PARTS	1	
- 69	AN515-8R6	SCREW ----------	4	
		---*---		
- 70	S1813-2	RELAY ----------	1	
- 71	S1838-1	HOUSING 60 PIN ---------- ATTACHING PARTS	1	
- 72	AN515-6R8	SCREW ----------	2	
		---*---		
- 73	S1838-3	HOUSING 20 PIN ---------- ATTACHING PARTS	1	
- 74	AN515-4R8	SCREW ----------	2	
		---*---		
- 75	S1838-2	HOUSING 36 PIN ---------- ATTACHING PARTS	2	
- 76	AN515-4R6	SCREW ----------	2	
		---*---		
- 77	S1836-1	KEYING PLUG USED ON ITEM 61 & 62 ONLY ONE EACH ---- REQD PER HOUSING	3	
		CABLE ASSY-TRANSMITTER SELECTOR SWITCH ----------	NP	
- 78	S1697-1	SWITCH-TRANSMITTER SELECTOR ----------	1	
- 79	S1837-1	TERMINAL ----------	AR	
- 80	S1694-3-0.5	SHRINK TUBING BULK ITEM ----------	AR	
		CABLE ASSY-SPEAKER/PHONE SELECTOR SWITCH ----------	NP	
- 81	S1695-2	SWITCH SINGLE POLE-DOUBLE THROW USED ONLY WITH -- RADIOS HAVING BUILT-IN ISOLATION AMPLIFIER	1	
- 82	S1696-1	SWITCH DOUBLE POLE-DOUBLE THROW USED ONLY WITH -- RADIOS NOT HAVING BUILT-IN ISOLATION AMPLIFIER	1	
	S1837-1	TERMINAL ----------	AR	
	S1694-3-0.5	SHRINK TUBING BULK ITEM ----------	AR	
		CABLE ASSY-OMNI SELECTOR SWITCH ----------	NP	
- 83	S1696-1	SWITCH DOUBLE POLE-DOUBLE THROW ----------	1	
	S1837-1	TERMINAL ----------	AR	
	S1694-3-0.5	SHRINK TUBING BULK ITEM ----------	AR	
- 84	1213005-2	COVER ----------	1	
- 85	1213005-4	COVER USED ONLY WHEN DUAL ADF IS INSTALLED ----------	1	
- 86	1213064-1	BRACKET ASSY - SWITCH MOUNTING ---------- ATTACHING PARTS	1	
	AN5C7-632R7	SCREW ----------	4	
		---*---		
- 87	S1216-3	NUT-DECORATIVE ----------	AR	
- 88	S1360-5	CIRCUIT BREAKER ----------	1	

CONTINUED ON NEXT PAGE

FIGURE AND INDEX NO.	PART NUMBER	DESCRIPTION 1 2 3 4 5 6 7	UNITS PER ASSY	USABLE ON CODE
4-1-		AUDIO ISOLATION AMPLIFIER & TRANSMITTER SELECTOR SWITCH -----	NP	
		INSTALLATION F 337 SERIES ONLY		
- 89	KA-25	KING ISOLATION AMPLIFIER NOT REQUIRED WHEN RADIOS -----	1	
		HAVE BUILT-IN AMPLIFIERS KG		
		ATTACHING PARTS		
	AN515-8R8	SCREW ----------	4	
	NAS686A08K	NUTPLATE ----------	4	
		---*---		
- 90	C57C084-2	JUNCTION BOX & CIRCUIT BOARD ASSY ----------	1	
		ATTACHING PARTS		
- 91	AN515-6R22	SCREW ----------	4	
		---*---		
- 92	S1813-1	RELAY ----------	1	
- 93	S1838-1	HOUSING 60 PIN ----------	1	
		ATTACHING PARTS		
- 94	AN515-6R8	SCREW ----------	2	
		---*---		
- 95	S1838-3	HOUSING 20 PIN ----------	1	
		ATTACHING PARTS		
- 96	AN515-4R8	SCREW ----------	2	
		---*---		
- 97	S1838-2	HOUSING 36 PIN ----------	2	
		ATTACHING PARTS		
- 98	AN515-4R6	SCREW ----------	2	
		---*---		
- 99	S1836-1	KEYING PLUG USED ON ITEM 86 & 88 ONLY ONE EACH ----	3	
		REQD PER HOUSING		
		CABLE ASSY-TRANSMITTER SELECTOR SWITCH ----------	1	
-100	S1697-1	SWITCH-TRANSMITTER SELECTOR USED ONLY WHEN DUAL -----	1	
		RADIOS ARE INSTALLED.		
-101	MRA-2-5	SWITCH-TRANSMITTER SELECTOR USED ONLY WHEN THREE ----	1	
		OR MORE RADIOS ARE INSTALLED AELM		
-102	S1837-1	TERMINAL ----------	AR	
-103	S1694-3-0.5	SHRINK TUBING BULK ITEM ----------	AR	
		CABLE ASSY-SPEAKER/PHONE SELECTOR SWITCH ----------	NP	
-104	S1695-2	SWITCH SINGLE POLE-DOUBLE THROW USED ONLY WITH --	1	
		RADIOS HAVING BUILT-IN ISOLATION AMPLIFIER		
-105	S1696-1	SWITCH DOUBLE POLE-DOUBLE THROW USED ONLY WITH --	1	
		RADIOS NOT HAVING BUILT-IN ISOLATION AMPLIFIER		
	S1837-1	TERMINAL ----------	AR	
	S1694-3-0.5	SHRINK TUBING BULK ITEM ----------	AR	
	147C201-4	BRACKET ASSY ----------	1	
-106	147C201-5	BRACKET ----------	1	
-107	NAS43DD1-60	SPACER ----------	2	
-108	NAS43DD1-20	SPACER ----------	2	
-109	1513143-1	PLATE ASSY ----------	1	
		ATTACHING PARTS		
-110	AN507-632R28	SCREW ----------	2	
		---*---		
-111	S1216-3	NUT-DECORATIVE ----------	AR	
-112	1910-E	KNOB DHM ----------	1	
	SS48151	PLUG BUTTON UC ----------	AR	
-113	S1360-5	CIRCUIT BREAKER ----------	1	

SPEAKER INSTALLATION

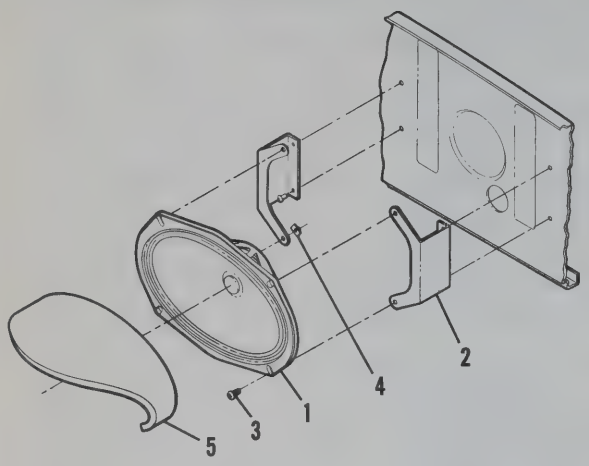

INSTALLATION A - MODEL 150

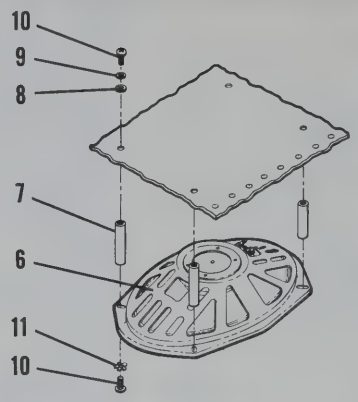

INSTALLATION B - MODELS 172, 180 & 185

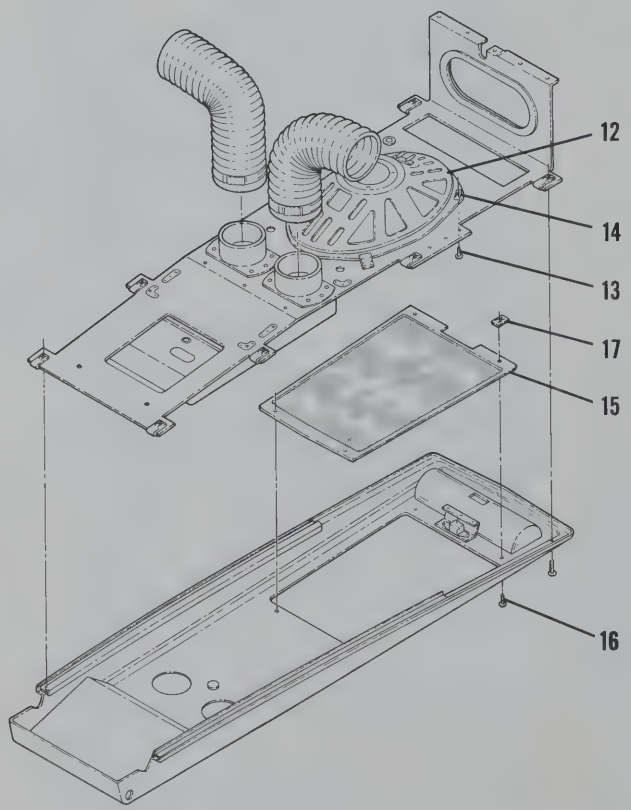

INSTALLATION C - MODEL 177

Figure 4-2. Speaker Installation (Sheet 1 of 3)

SPEAKER INSTALLATION

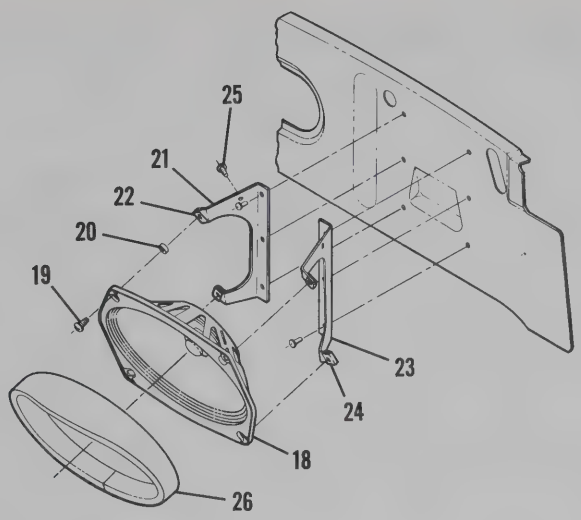

INSTALLATION **D** - MODELS 182 & 206 SERIES
(TYPICAL INSTALLATION FOR L.H. & R.H. SPEAKERS)

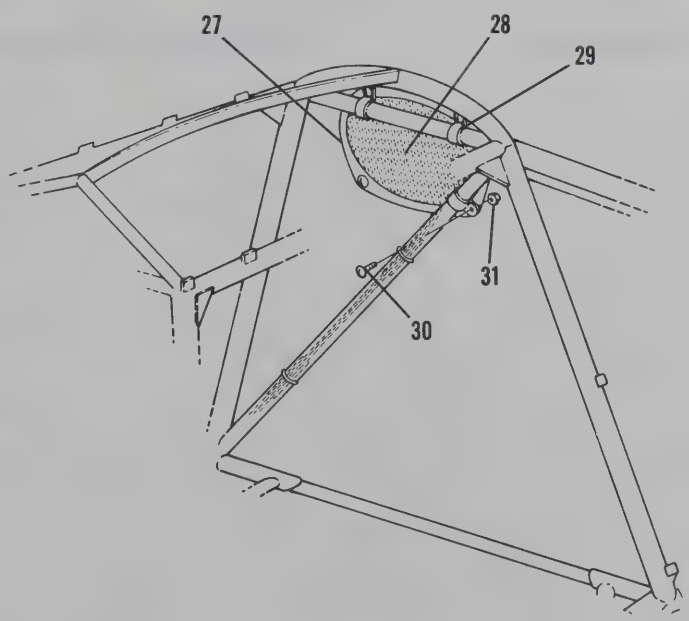

INSTALLATION **E** - MODEL 188

Figure 4-2. Speaker Installation (Sheet 2 of 3)

SPEAKER INSTALLATION

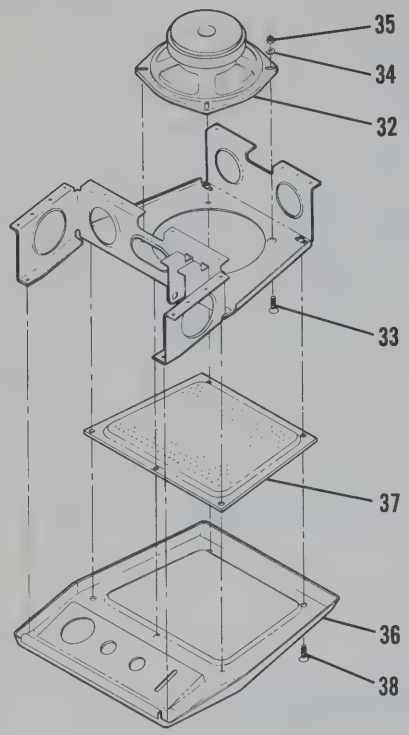

INSTALLATION **F** - MODELS 207 & T207

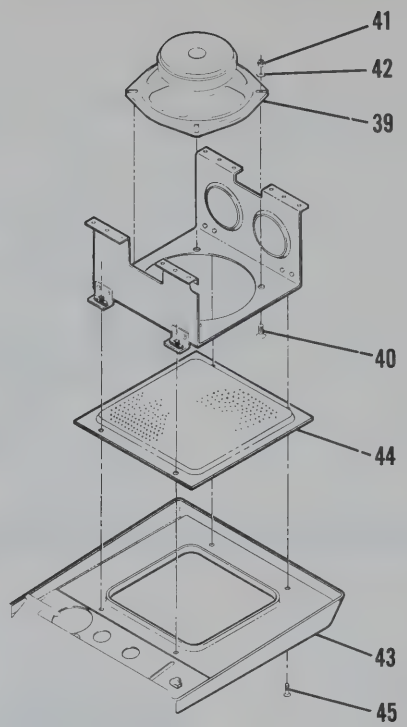

INSTALLATION **G** - MODELS 210 & T210

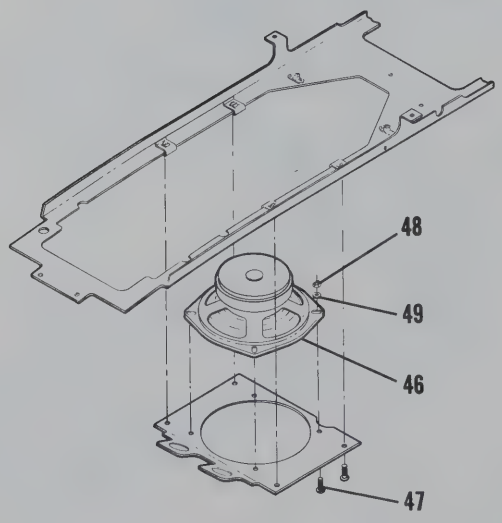

INSTALLATION **H** - MODELS 337 & T337

Figure 4-2. Speaker Installation (Sheet 3 of 3)

FIGURE AND INDEX NO.	PART NUMBER	DESCRIPTION 1 2 3 4 5 6 7	UNITS PER ASSY	USABLE ON CODE
4-2-		SPEAKER INSTALLATIONS	NP	
		SPEAKER INSTALLATION A MODEL 150 ONLY	NP	
- 1	077C731-1	SPEAKER WIRES NOT SUPPLIED	1	A
	C596505-0101	SPEAKER WIRES NOT SUPPLIED	1	B
		ATTACHING PARTS		
- 2	C47C011-1	BRACKET	2	
- 3	S1021Z8-6	SCREW	4	
- 4	NAS446-4-3	NUT	4	
		---*---		
- 5	C470107-1	BAFFLE ASSY	1	
		SPEAKER INSTALLATION B MODELS 172, 180 & 185 ONLY	NP	
- 6	C596505-0101	SPEAKER WIRES NOT SUPPLIED	1	
		ATTACHING PARTS		
- 7	077C730-2	SPACER	4	
- 8	S350	WASHER-SEALING	4	
- 9	AN960-10L	WASHER	4	
- 10	AN515-8R6	SCREW	8	
- 11	AN936B8	WASHER	4	
		---*---		
		SPEAKER INSTALLATION C MODEL 177 ONLY	NP	
- 12	C596505-0101	SPEAKER WIRES NOT SUPPLIED	1	
		ATTACHING PARTS		
- 13	S1021Z8-8	SCREW	4	
- 14	NAS446-4-3	NUTPLATE	2	
		---*---		
- 15	17C6016-1	GRILLE	1	
		ATTACHING PARTS		
- 16	S1021Z6-5	SCREW	4	
- 17	NAS446-2-3	NUT	4	
		---*---		
		SPEAKER INSTALLATION D MODEL 182 & 206 SERIES ONLY	NP	
- 18	C596505-0101	SPEAKER WIRES NOT SUPPLIED TYPICAL FOR BOTH	1	
		RIGHT AND LEFT SPEAKER INSTALLATIONS		
		ATTACHING PARTS		
- 19	S1021Z8-6	SCREW	4	
- 20	NAS420D6-8	SPACER	4	
		---*---		
- 21	C770732-5	ADAPTER PLATE ASSY	1	
	C770732-7	ADAPTER PLATE	1	
- 22	NAS395-11-3	NUT	2	
- 23	C770732-6	ADAPTER PLATE ASSY	1	
	C770732-8	ADAPTER PLATE	1	
- 24	NAS395-11-3	NUT	2	
- 25	S1021Z4-4	SCREW-GROUNDING	1	
- 26	127C058-1	BAFFLE	1	
		SPEAKER INSTALLATION E MODEL 188 ONLY	NP	
- 27	C596505-0101	SPEAKER WIRES NOT SUPPLIED	1	
		ATTACHING PARTS		
- 28	14276	GRILLE-SPEAKER WSHW	1	
- 29	AN742D12	CLAMP	3	
- 30	AN515-8R10	SCREW	4	
- 31	NAS679A08	NUT	4	
		---*---		
	S1047-2-3.00	SEAL BULK ITEM	AR	
	S1614-1	LACING BULK ITEM	AR	

CONTINUED ON NEXT PAGE

FIGURE AND INDEX NO.	PART NUMBER	DESCRIPTION 1 2 3 4 5 6 7	UNITS PER ASSY	USABLE ON CODE
4-2-		SPEAKER INSTALLATION F MODEL 207 SERIES ONLY	NP	
- 32	C596504-0101	SPEAKER WIRE NOT SUPPLIED	1	
		ATTACHING PARTS		
- 33	AN507-832R8	SCREW	4	
- 34	AN960D8	WASHER	4	
- 35	NAS679A08	NUT	4	
		---*---		
- 36	1211080-1	COVER-SPEAKER	1	
- 37	1211081-1	GRILLE	1	
		ATTACHING PARTS		
- 38	AN507-832R7	SCREW	5	
		---*---		
		SPEAKER INSTALLATION G MODEL 210 SERIES ONLY	NP	
- 39	C596504-0101	SPEAKER WIRES NOT SUPPLIED	1	
		ATTACHING PARTS		
- 40	AN507-832R8	SCREW	4	
- 41	NAS679A08	NUT	4	
- 42	AN960C8L	WASHER	4	
		---*---		
- 43	1211085-7	COVER	1	
- 44	1211086-1	GRILLE	1	
		ATTACHING PARTS		
- 45	AN507-832R6	SCREW	4	
		---*---		
		SPEAKER INSTALLATION H MODEL 337 SERIES ONLY	NP	
- 46	C596504-0101	SPEAKER WIRES NOT SUPPLIED	1	
		ATTACHING PARTS		
- 47	AN515-8R10	SCREW	4	
- 48	NAS679A08	NUT	4	
- 49	AN960D8	WASHER	4	
		---*---		
		A---150 SERIAL 15069309 THRU 15069489, SERIAL 15069491 THRU 15069494 AND SERIAL 15069498.		
		B---150 SERIAL 15069499 & ON		

MICROPHONE INSTALLATION & SERVICE PARTS

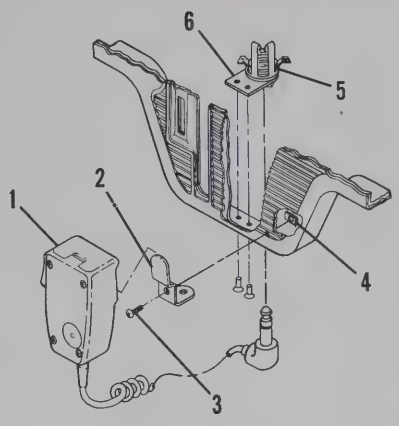

INSTALLATION **A** - 150 ONLY

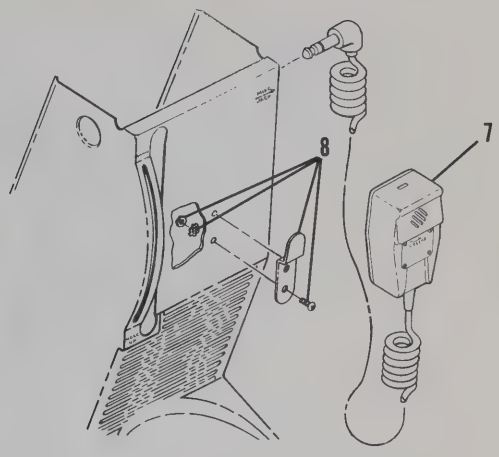

INSTALLATION **B** - 172 ONLY

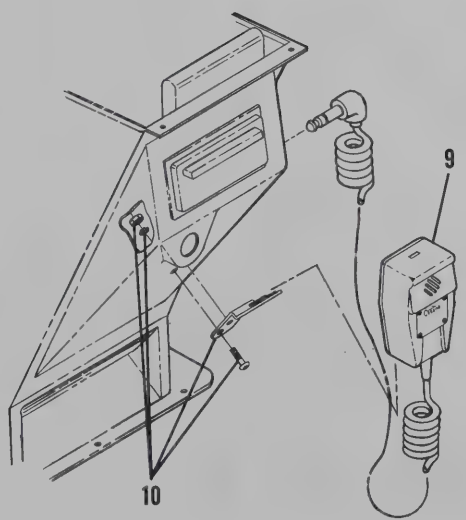

INSTALLATION **C** - 177 ONLY

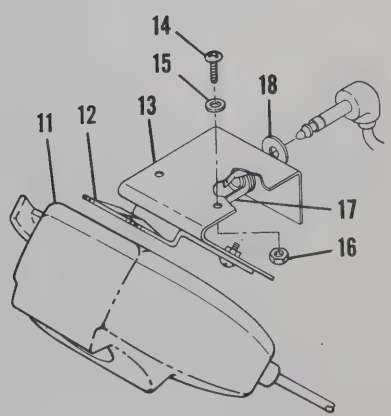

INSTALLATION **D** - 180 & 185 ONLY

Figure 4-3. Cessna Crafted Microphone Installation & Service Parts (Sheet 1 of 7)

MICROPHONE INSTALLATION & SERVICE PARTS

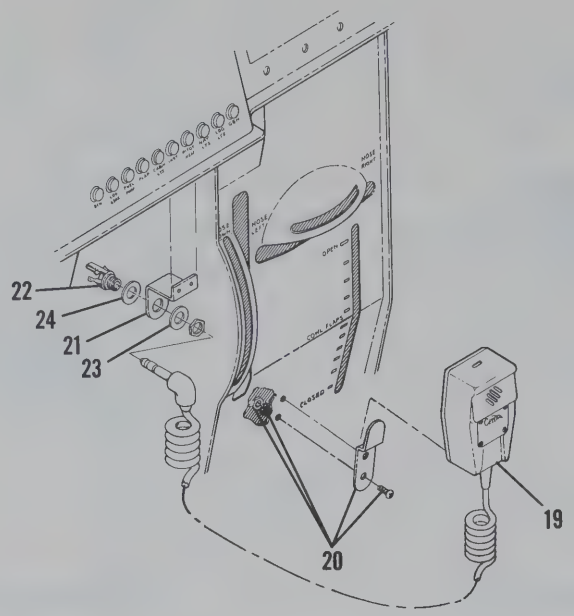

INSTALLATION **E** - 182, 206 & 207 SERIES ONLY

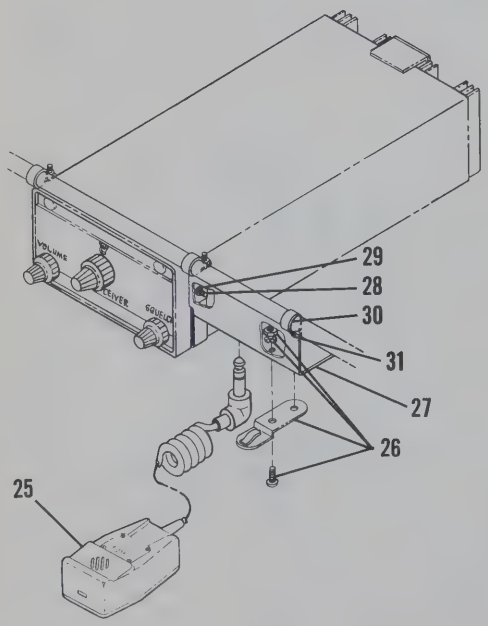

INSTALLATION **F** - 188 ONLY
(Used only with 300 Transceiver)

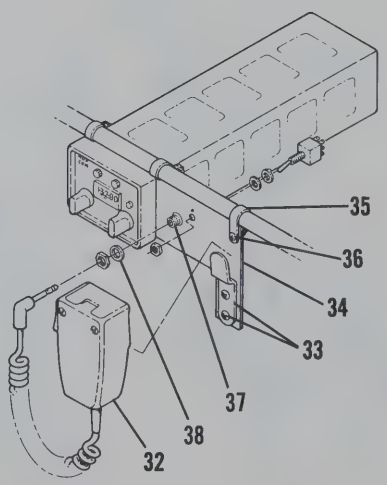

INSTALLATION **G** - 188 ONLY
(Used only with 400 Transceiver)

Figure 4-3. Cessna Crafted Microphone Installation & Service Parts (Sheet 2 of 7)

MICROPHONE INSTALLATION & SERVICE PARTS

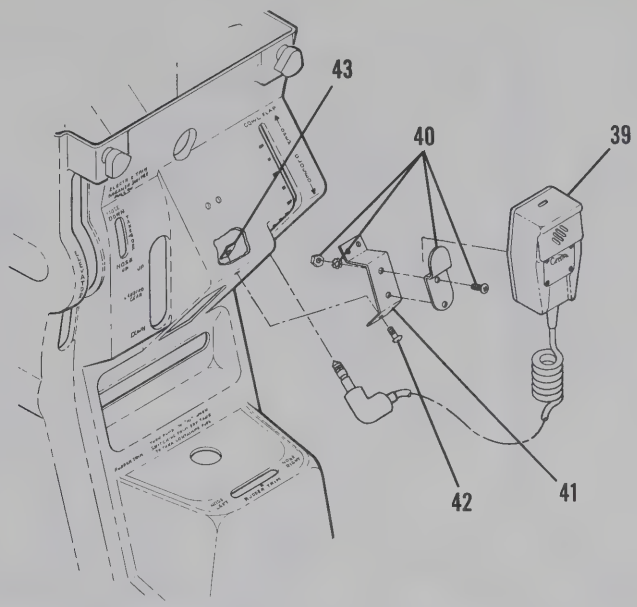

INSTALLATION **H** - 210 & T210 SERIES ONLY

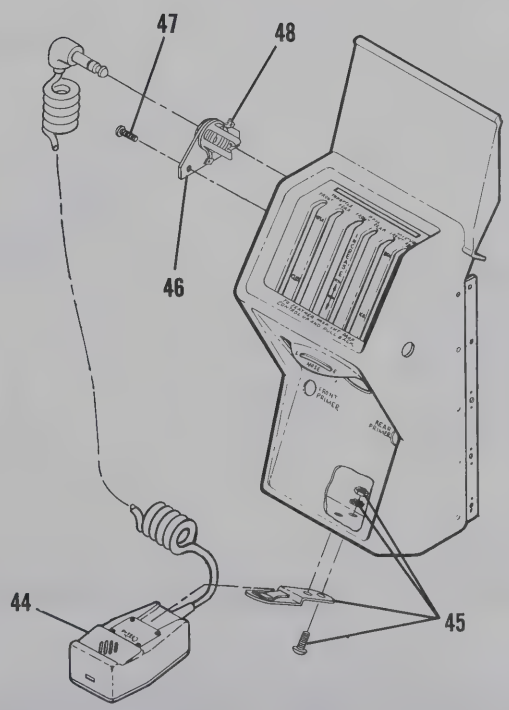

INSTALLATION **J** - 337 & T337 SERIES ONLY

Figure 4-3. Cessna Crafted Microphone Installation & Service Parts (Sheet 3 of 7)

MICROPHONE INSTALLATION & SERVICE PARTS

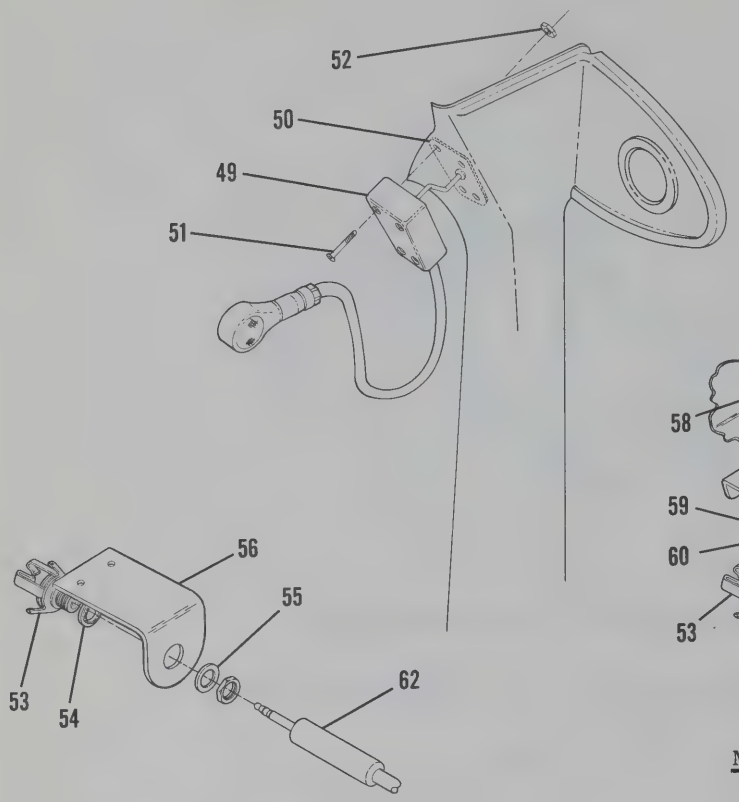

MODEL 182 ONLY

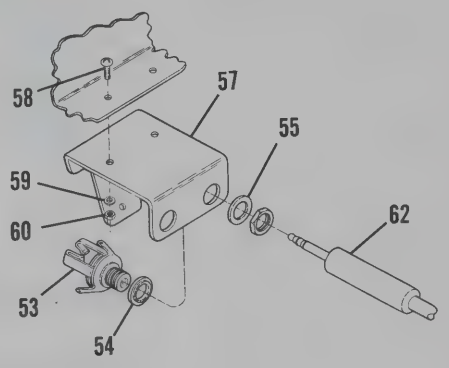

MODELS 180 & 185 ONLY

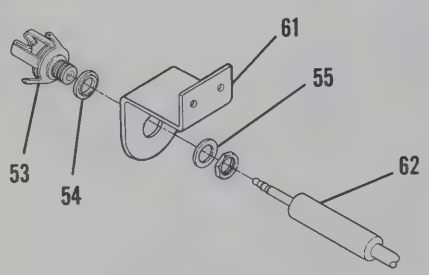

MODELS 206, 207 &210 SERIES ONLY

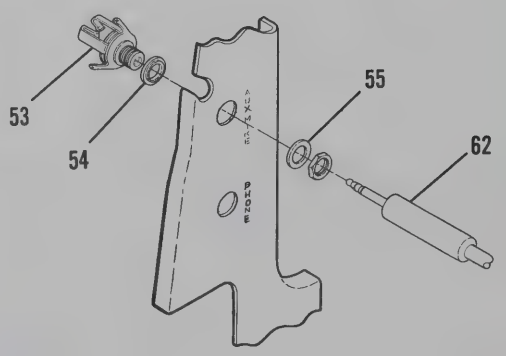

MODEL 337 SERIES ONLY

INSTALLATION **K** - MODELS 180, 182, 185, 206 SERIES, 207 SERIES, 210 SERIES & 337 SERIES ONLY

Figure 4-3. Cessna Crafted Microphone Installation & Service Parts (Sheet 4 of 7)

MICROPHONE INSTALLATION & SERVICE PARTS

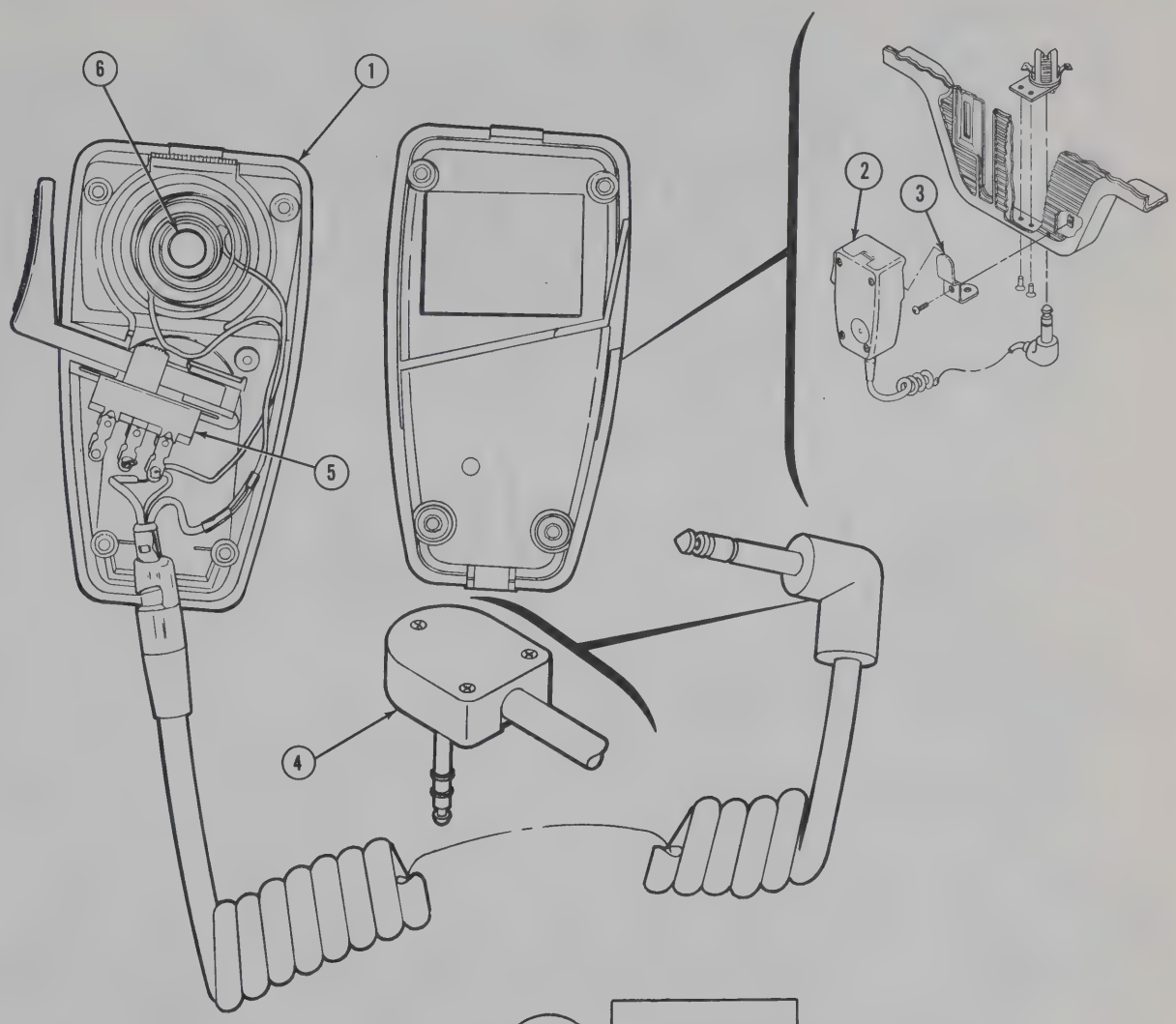

WIRING DIAGRAM

PARTS LIST

1.	C596501-0104	MICROPHONE KIT
2.	C596501-0102	MICROPHONE ASSY (Part of Item 1.)
3.	C596501-0105	MOUNTING KIT (Part of Item 1.)
4.	S1342-4	PLUG-REMOVABLE (Replaces Existing Plug)
5.	35277-00	SWITCH
6.	35272-00	MIKE CARTRIDGE

Figure 4-3. Cessna Crafted Microphone Installation & Service Parts (Sheet 5 of 7)

MICROPHONE INSTALLATION & SERVICE PARTS

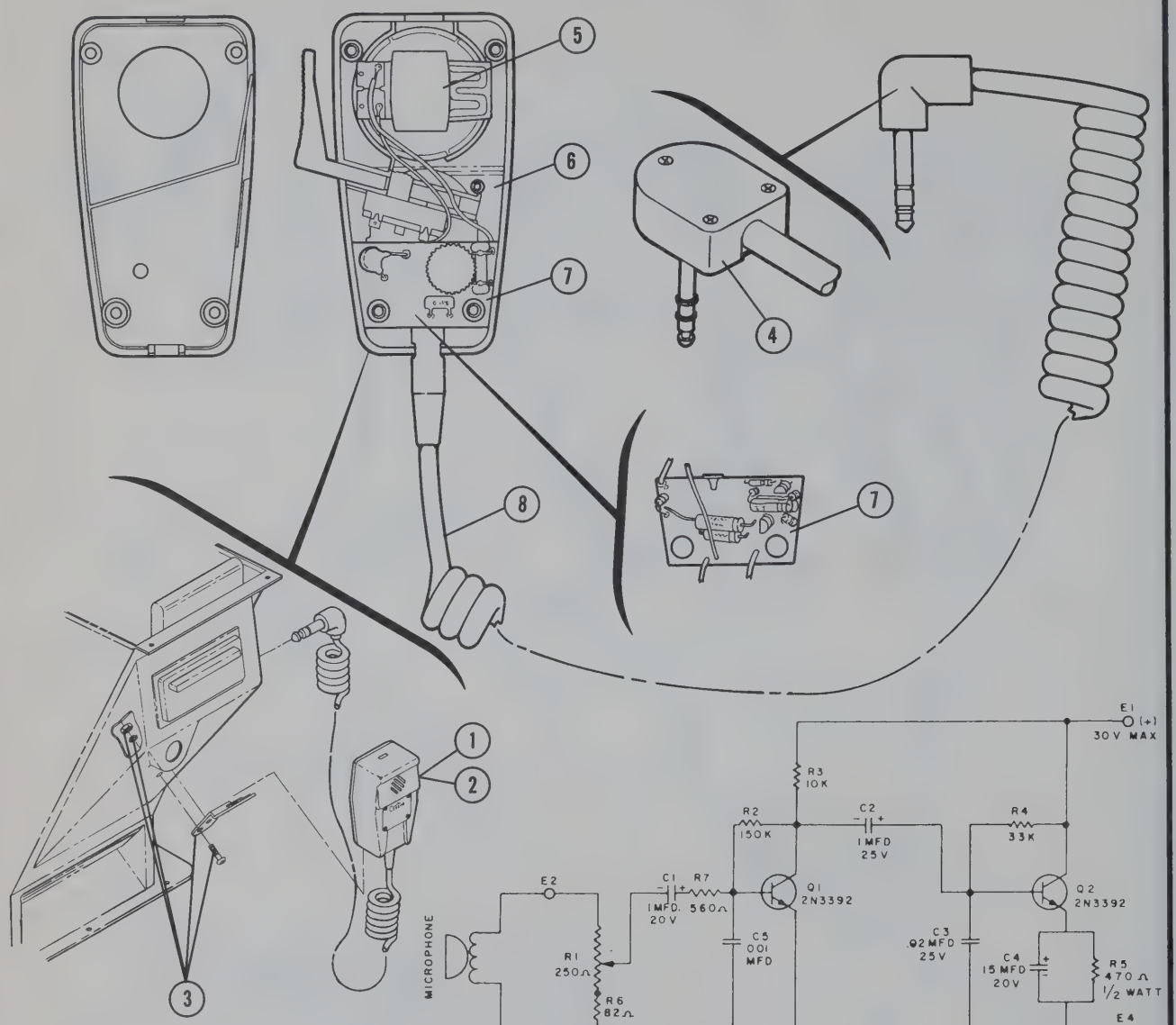

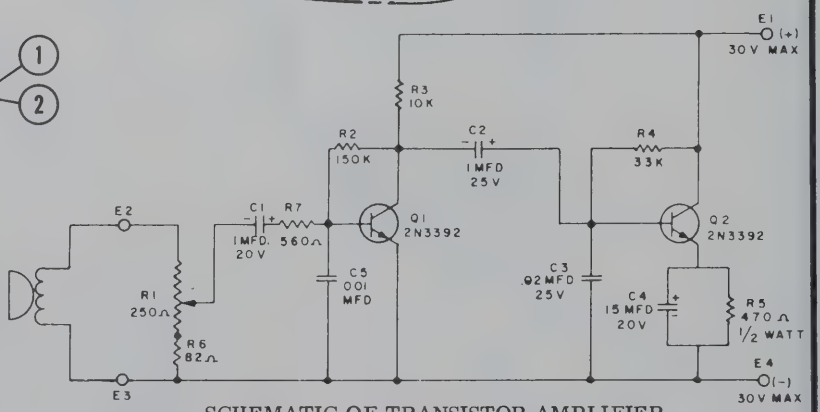

SCHEMATIC OF TRANSISTOR AMPLIFIER

PARTS LIST

1. C596502-0201 MICROPHONE KIT
2. C596502-0202 MICROPHONE ASSY (Part of Item 1.)
3. C596501-0103 MOUNTING KIT (Part of Item 1.)
4. S1342-4 PLUG - REMOVABLE (Repaces Existing Plug)
5. 60794-03 MIKE CARTRIDGE
6. 35277-00 SWITCH
7. 60792-00 CIRCUIT BOARD
8. 60903-03 CORD

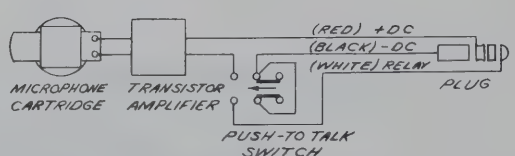

WIRING DIAGRAM

Figure 4-3. Cessna Crafted Microphone Installation & Service Parts (Sheet 6 of 7)

MICROPHONE INSTALLATION & SERVICE PARTS

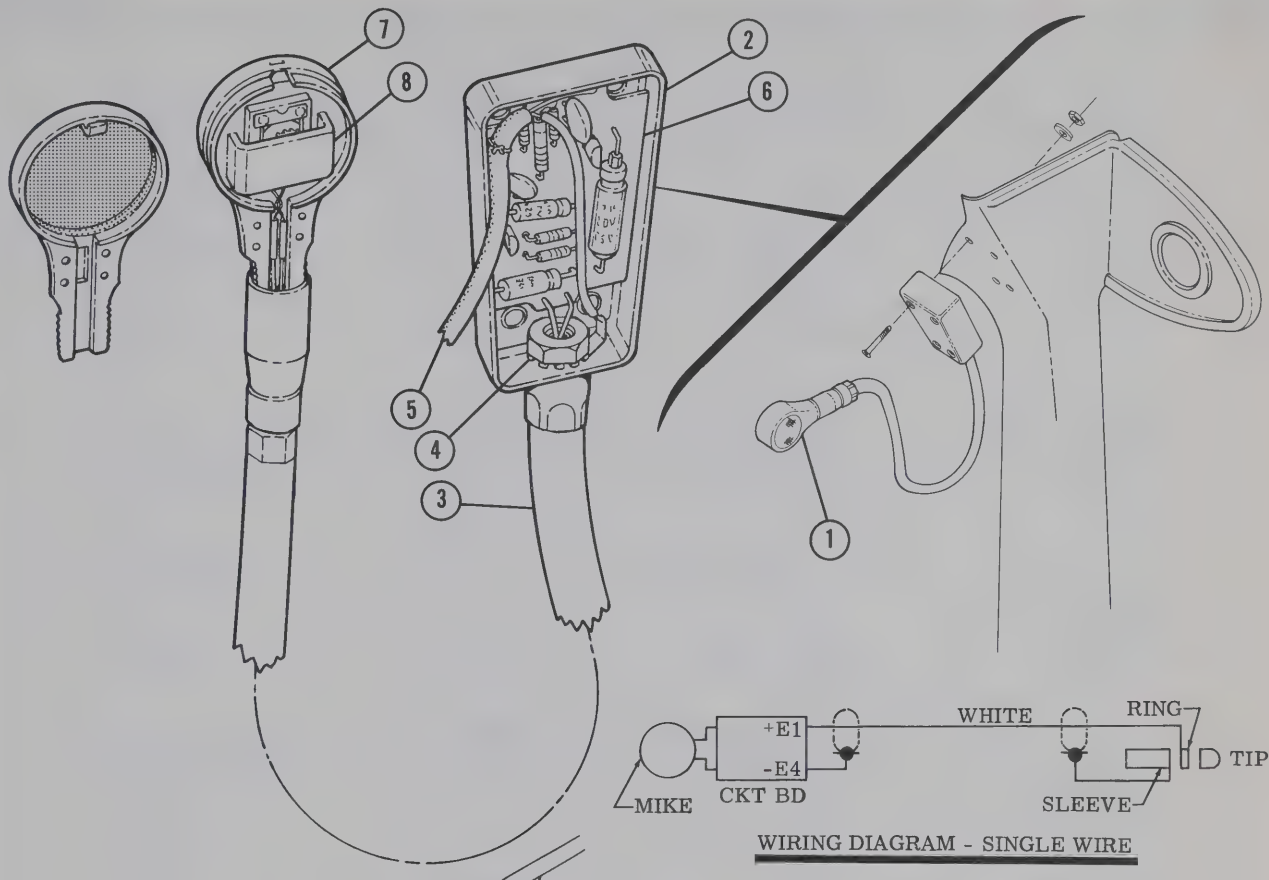

WIRING DIAGRAM - SINGLE WIRE

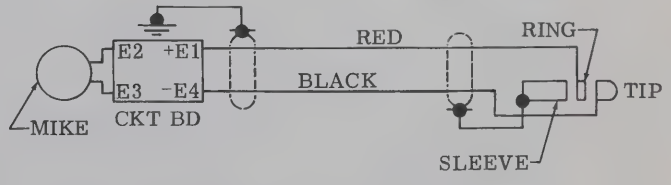

WIRING DIAGRAM - DOUBLE WIRE

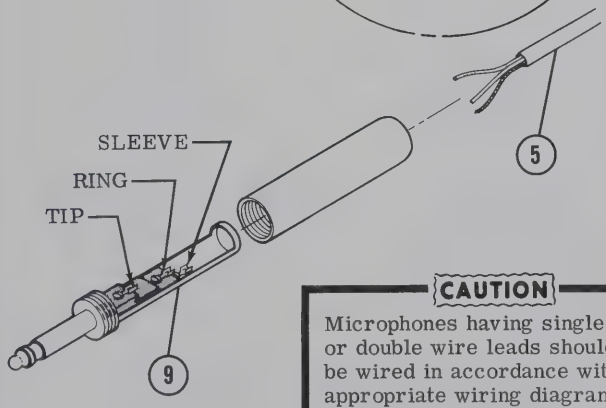

CAUTION

Microphones having single wire or double wire leads should only be wired in accordance with the appropriate wiring diagram shown on this page.

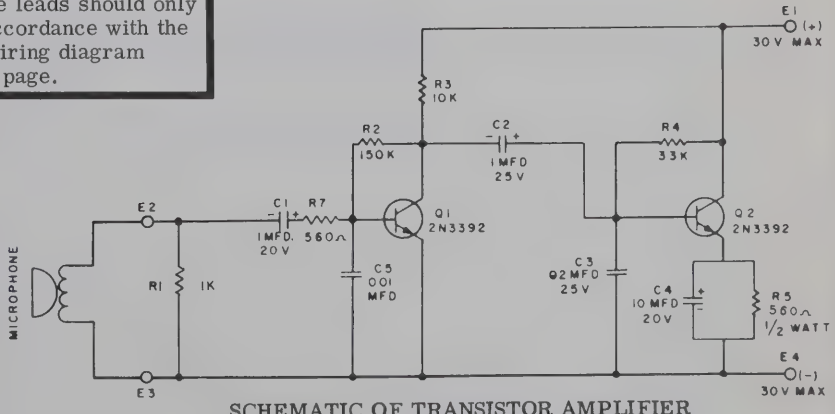

SCHEMATIC OF TRANSISTOR AMPLIFIER

PARTS LIST

1. C596503-0101 MICROPHONE ASSY
2. 61603-00 HOUSING
3. 61617-00 FLEXIBLE TUBING ASSY
4. 61605-00 NUT
5. 25421-00 CORDAGE - 8 FT
6. 61602-00 CIRCUIT BOARD ASSY
7. 61619-00 HOUSING - BOTTOM ASSY
8. 61178-06 MIKE CARTRIDGE
9. PJ-068 PLUG

Figure 4-3. Cessna Crafted Microphone Installation & Service Parts (Sheet 7 of 7)

FIGURE AND INDEX NO.	PART NUMBER	DESCRIPTION 1 2 3 4 5 6 7	UNITS PER ASSY	USABLE ON CODE
4-3-		MICROPHONE INSTALLATIONS	NP	
		MICROPHONE INSTALLATION A 150 ONLY	NP	
- 1	C596501-0104	MICROPHONE KIT	1	
	C596501-0102	MICROPHONE ASSY-MICROPHONE, CORD & PLUG ASSY	1	
- 2	C596501-0105	MOUNTING KIT	1	
		ATTACHING PARTS		
- 3	S1021Z6-6	SCREW	2	
- 4	NAS446-2-3	NUT	2	
		---*---		
- 5	S1102-1	JACK-MICROPHONE	1	
		ATTACHING PARTS		
- 6	C413464-1	MOUNTING PLATE	1	
	S1196-2	WASHER-INNER	1	
	S1196-1	WASHER-OUTER	1	
		---*---		
		MICROPHONE INSTALLATION B 172 ONLY	NP	
- 7	C596502-0201	MICROPHONE KIT	1	
	C596502-0202	MICROPHONE ASSY	1	
- 8	C596501-0103	MOUNTING KIT	1	
	S1102-1	JACK-MICROPHONE	1	
	S1196-1	WASHER-OUTER	1	
	S1196-2	WASHER-INNER	1	
		MICROPHONE INSTALLATION C 177 ONLY	NP	
- 9	C596502-0201	MICROPHONE KIT	1	
	C596502-0202	MICROPHONE ASSY	1	
- 10	C596501-0103	MOUNTING KIT	1	
	S1102-1	JACK-MICROPHONE	1	
	S1196-1	WASHER-OUTER	1	
	S1196-2	WASHER-INNER	1	
		MICROPHONE INSTALLATION D 180 & 185 ONLY	NP	
- 11	C596502-0201	MICROPHONE KIT	1	
	C596502-0202	MICROPHONE ASSY	1	
- 12	C596501-0103	MOUNTING KIT	1	
- 13	0411968-1	BRACKET	1	
		ATTACHING PARTS		
- 14	AN507-632R8	SCREW	2	
- 15	AN960-6L	WASHER	2	
- 16	NAS679A06	NUT	2	
		---*---		
- 17	S1102-1	JACK-MICROPHONE	1	
	S1196-1	WASHER-OUTER	1	
- 18	S1196-2	WASHER-INNER	1	
		MICROPHONE INSTALLATION E 182, 206 & 207 SERIES ONLY	NP	
- 19	C596502-0201	MICROPHONE KIT	1	
	C596502-0202	MICROPHONE ASSY	1	
- 20	C596501-0103	MOUNTING KIT	1	
- 21	1270638-1	BRACKET	1	
		ATTACHING PARTS		
	S1021A6-6	SCREW	2	
		---*---		
- 22	S1102-1	JACK-MICROPHONE	1	
- 23	S1196-2	WASHER-INNER	1	
- 24	S1196-1	WASHER-OUTER	1	

CONTINUED ON NEXT PAGE

FIGURE AND INDEX NO.	PART NUMBER	DESCRIPTION 1 2 3 4 5 6 7	UNITS PER ASSY	USABLE ON CODE
4-3-		MICROPHONE INSTALLATION F 188 ONLY USED ONLY	NP	
		WITH 300 TRANSCEIVER INSTALLATION		
- 25	C596502-0201	MICROPHONE KIT	1	
	C596502-0202	MICROPHONE ASSY	1	
- 26	C596501-0103	MOUNTING KIT	1	
- 27	1613281-1	BRACKET	1	
		ATTACHING PARTS		
- 28	AN5C7-632R6	SCREW	2	
- 29	NAS679A06	NUT	2	
- 30	AN742D16	CLAMP	1	
- 31	AN515-8R8	SCREW	1	
	NAS679A08	NUT	1	
		---*---		
	S1102-1	JACK-MICROPHONE	1	
	S1196-2	WASHER-INNER	1	
	S1196-1	WASHER-OUTER	1	
		MICROPHONE INSTALLATION G 188 ONLY USED ONLY	NP	
		WITH 400 TRANSCEIVER INSTALLATION		
- 32	C596502-0201	MICROPHONE KIT	1	
	C596502-0202	MICROPHONE ASSY	1	
- 33	C596501-0103	MOUNTING KIT	1	
- 34	167C022-1	BRACKET	1	
		ATTACHING PARTS		
- 35	AN742D16	CLAMP	1	
- 36	AN515-8R8	SCREW	3	
	NAS679A08	NUT	1	
		---*---		
- 37	S1102-1	JACK-MICROPHONE	1	
- 38	S1196-2	WASHER-INNER	1	
	S1196-1	WASHER-OUTER	1	
		MICROPHONE INSTALLATION H 210 & T210 SERIES ONLY	NP	
- 39	C596502-0201	MICROPHONE KIT	1	
	C596502-0202	MICROPHONE ASSY	1	
- 40	C596501-0103	MOUNTING KIT	1	
- 41	1270468-3	BRACKET	1	
		ATTACHING PARTS		
- 42	S1021Z4-4	SCREW	3	
- 43	NAS446-1-3	NUT	3	
		---*---		
	S1102-1	JACK-MICROPHONE	1	
	S1196-1	WASHER-OUTER	1	
	S1196-2	WASHER-INNER	1	
		MICROPHONE INSTALLATION J 337 & T337 SERIES ONLY	NP	
- 44	C596502-0201	MICROPHONE KIT	1	
	C596502-0202	MICROPHONE ASSY	1	
- 45	C596501-0103	MOUNTING KIT	1	
- 46	1513627-1	BRACKET-MICROPHONE JACK	1	
		ATTACHING PARTS		
- 47	AN515-8R6	SCREW	2	
	NAS679A08	NUT	2	
		---*---		
- 48	S1102-1	JACK-MICROPHONE	1	
	S1196-2	WASHER-INNER	1	
	S1196-1	WASHER-OUTER	1	

CONTINUED ON NEXT PAGE

FIGURE AND INDEX NO.	PART NUMBER	DESCRIPTION 1 2 3 4 5 6 7	UNITS PER ASSY	USABLE ON CODE
4-3-		BOOM MICROPHONE INSTALLATION K 180, 182, 185 206 SERIES - 207 SERIES, 210 SERIES AND 337 SERIES ONLY	NP	
- 49	C596503-0101	MICROPHONE KIT ATTACHING PARTS	1	
- 50	127C055-1	PLATE	1	
- 51	NAS388-6-18F	SCREW	4	
- 52	NAS679A06	NUT	4	
		---*---		
- 53	S1102-1	JACK-MICROPHONE	1	
- 54	S1196-2	WASHER-INNER	1	
- 55	S1196-1	WASHER-OUTER	1	
- 56	C713291-1	BRACKET 182 ONLY	1	
- 57	C77C105-1	BRACKET 180 & 185 ONLY ATTACHING PARTS	1	
- 58	AN507-632R8	SCREW	2	
- 59	AN960-6L	WASHER	2	
- 60	NAS679A06	NUT	2	
		---*---		
- 61	127C638-1	BRACKET 206 SERIES, 207 SERIES & 210 SERIES ONLY	1	
- 62	PJ-068	PLUG	1	

NOTE

REFER TO THE APPROPIATE PARTS CATALOG
FOR MICROPHONE BUTTON INSTALLED ON CONTROL WHEEL.

HEADSET INSTALLATION

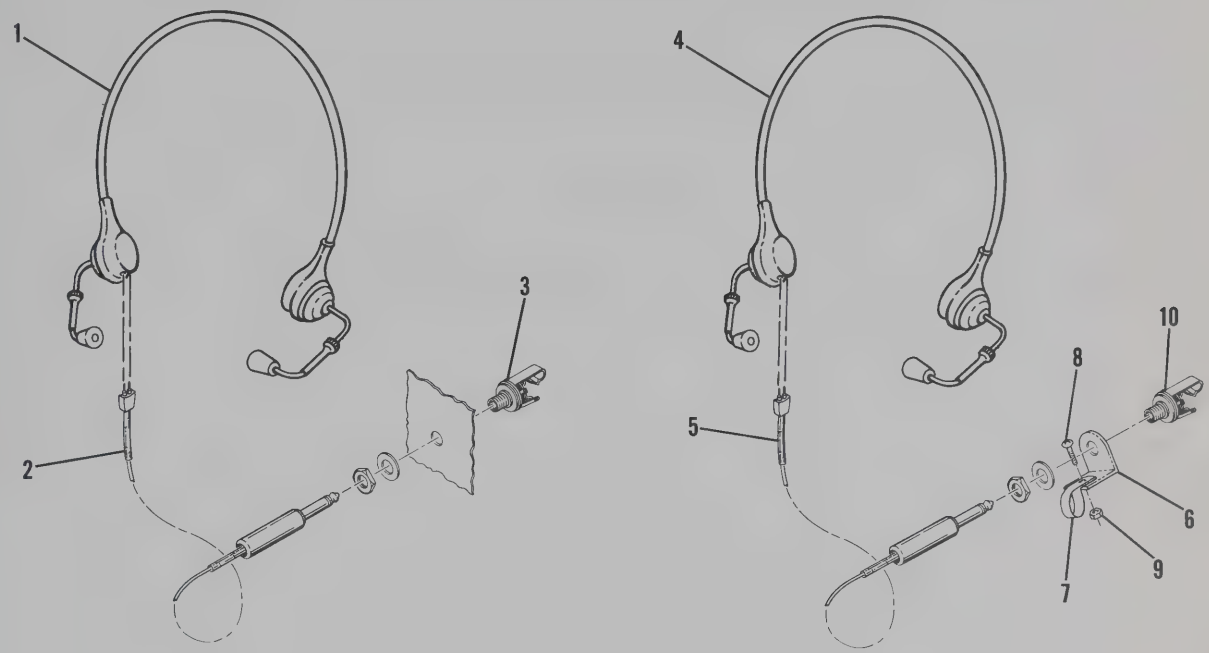

INSTALLATION **A** - ALL MODELS EXCEPT 150 & 188

INSTALLATION **B** - MODEL 188 ONLY

Figure 4-4. Headset Installation

FIGURE AND INDEX NO.	PART NUMBER	DESCRIPTION 1 2 3 4 5 6 7	UNITS PER ASSY	USABLE ON CODE
4-4-		HEADSET INSTALLATIONS	NP	
		HEADSET INSTALLATION A - ALL MODELS EXCEPT MODEL 150 & 188	NP	
	C77C039-1	HEADSET ASSY	1	
- 1	C77C039-2	TWINSET	1	
- 2	C77C039-3	CORD ASSY	1	
- 3	S1612-1	PHONE JACK	1	
	560 OHM 1/2 W	RESISTOR - LITTLE DEVIL OM	1	
		HEADSET INSTALLATION B - MODEL 188 ONLY	1	
	C77C039-1	HEADSET ASSY	1	
- 4	C77C039-2	TWINSET	1	
- 5	C77C039-3	CORD ASSY	1	
- 6	1670016-1	BRACKET	1	
		ATTACHING PARTS		
- 7	AN742D12	CLAMP	1	
- 8	AN515-8R8	SCREW	1	
- 9	NAS679A08	NUT	1	
		---*---		
- 10	S1612-1	PHONE JACK	1	
	560 OHM 1/2 W	RESISTOR - LITTLE DEVIL OM	1	

SECTION V

MISCELLANEOUS ELECTRONIC EQUIPMENT

TABLE OF CONTENTS

Figure	Equipment	Page
5-1	Radio Cooling Installation	5-2
5-2	Radio Noise Filter Installation	5-15
5-3	Available Accessory Kits List - See Accessory Kit Catalog	

RADIO COOLING INSTALLATIONS

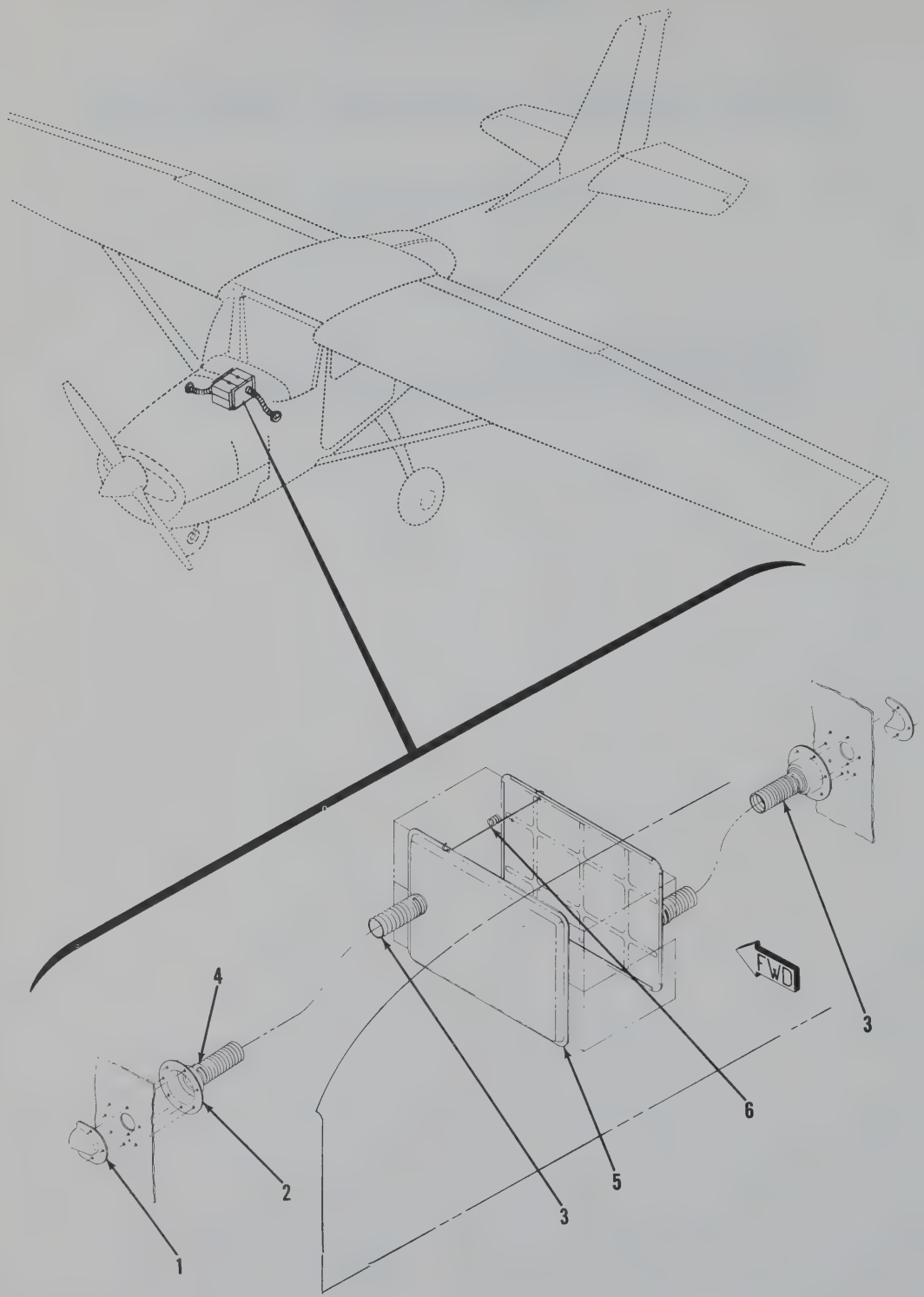

INSTALLATION **A** - 150, 172, 180 & 185 ONLY

Figure 5-1. Radio Cooling Installation (Sheet 1 of 9)

RADIO COOLING INSTALLATIONS

TYPICAL INSTALLATION FOR MODELS
182, 206 SERIES, 207 SERIES & 210 SERIES

NOTES

1. WHEN LESS THAN FOUR RADIOS ARE STACKED, TWO 1470221-2 SPRINGS (13) MAY BE INSTALLED IN LIEU OF THE 1470222-1 CLIP-SPRINGS (14).
2. WHEN LESS THAN THREE RADIOS ARE STACKED, THE HOLES IN THE PLENUM CHAMBERS (11) & (12) EXTENDING BELOW THE RADIOS ARE TO BE TAPED CLOSED USING A GOOD GRADE OF COMMERCIAL TAPE.

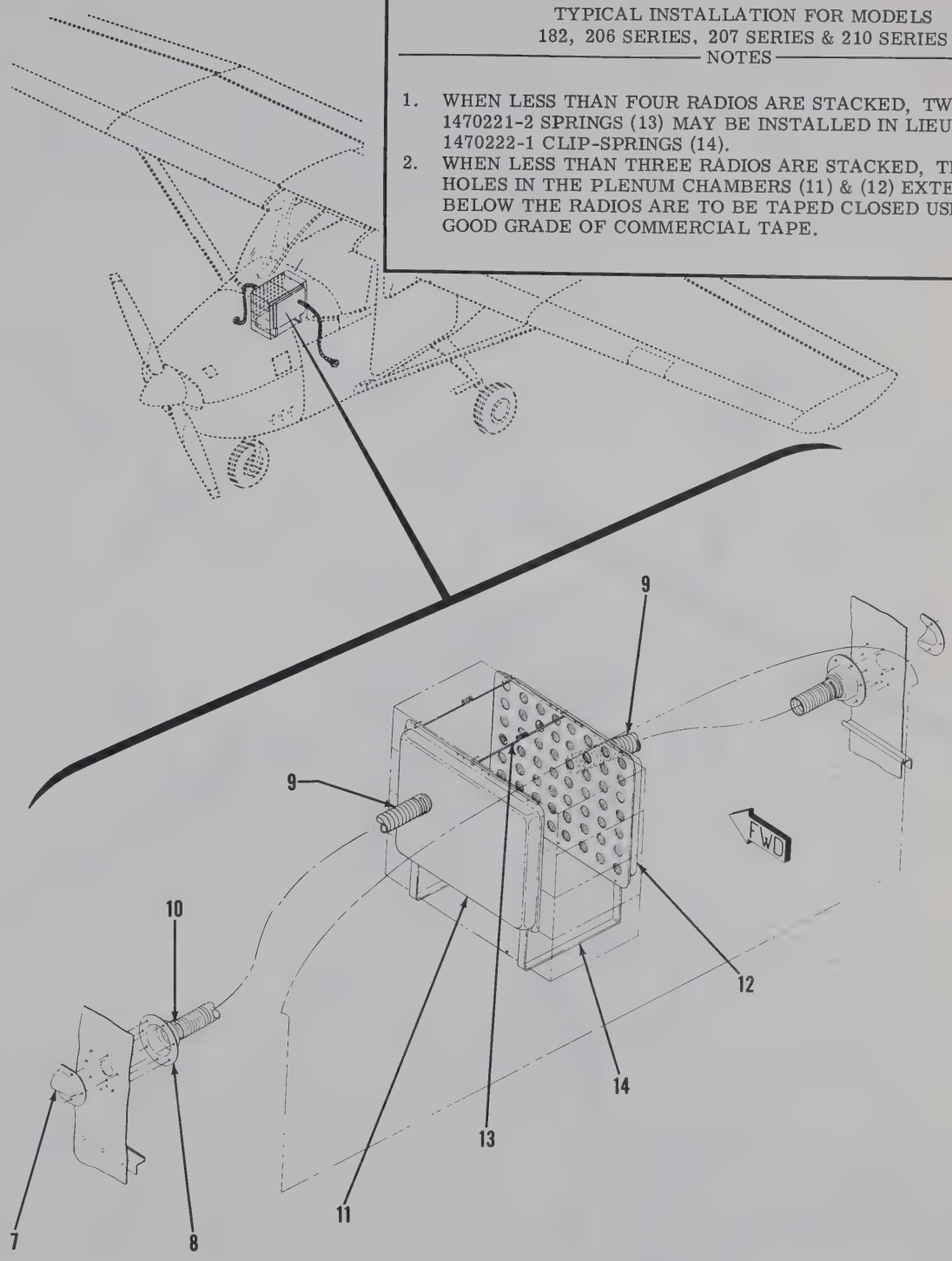

INSTALLATION **B** - 182, 206 SERIES, 207 SERIES & 210 SERIES ONLY

Figure 5-1. Radio Cooling Installation (Sheet 2 of 9)

RADIO COOLING INSTALLATION

MODEL 337 & T337 NON-TSO INSTALLATION ONLY

NOTES

1. WHEN LESS THAN FOUR RADIOS ARE STACKED, TWO 1470221-2 SPRINGS MAY BE INSTALLED IN LIEU OF THE 1470222-1 CLIP-SPRINGS (24).
2. WHEN LESS THAN THREE RADIOS ARE STACKED, THE HOLES IN THE PLENUM CHAMBERS (20) & (22) EXTENDING BELOW THE RADIO'S ARE TO BE TAPED CLOSED USING A GOOD GRADE OF COMMERCIAL TAPE.

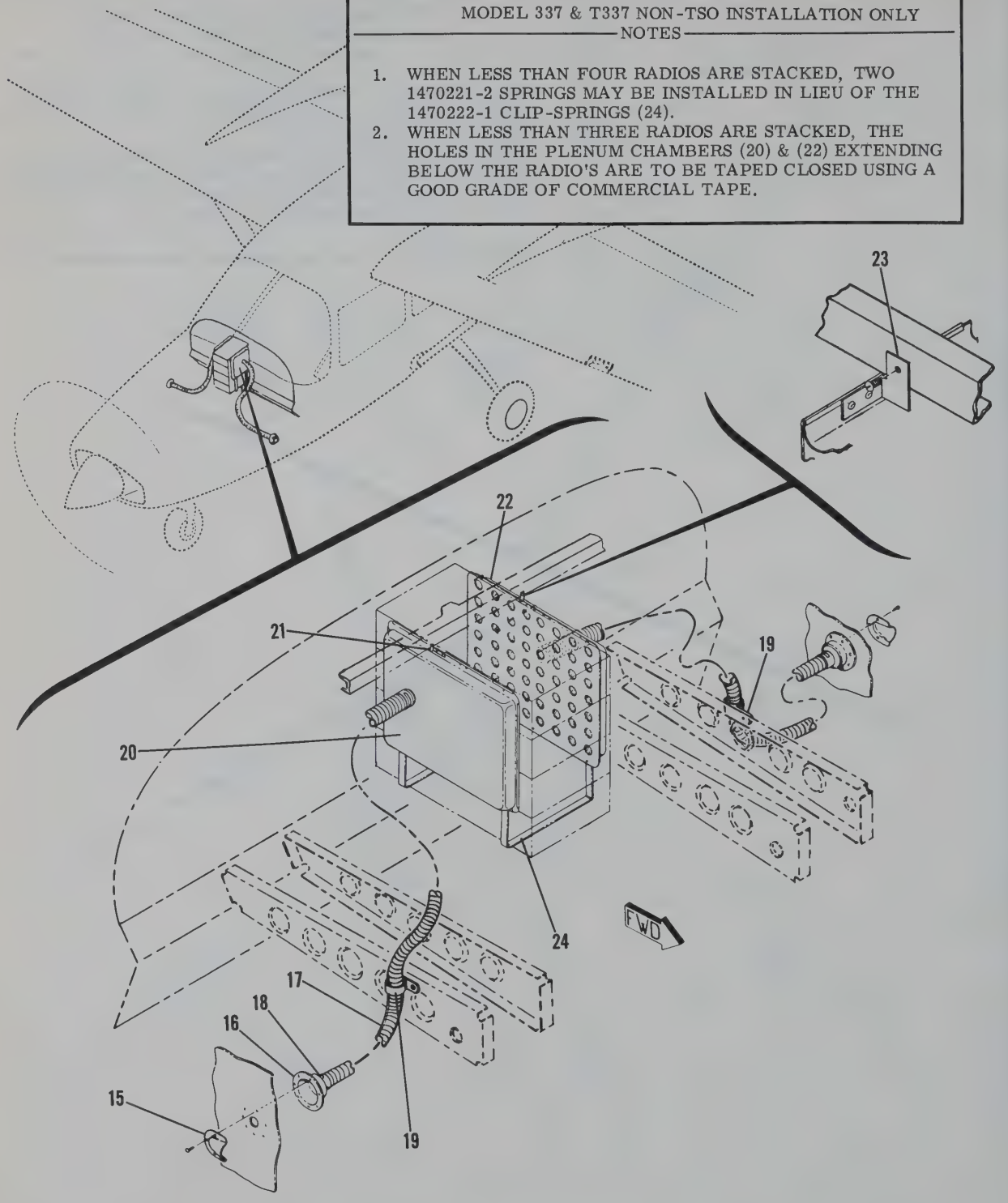

INSTALLATION C -337 & T337 ONLY

Figure 5-1. Radio Cooling Installation (Sheet 3 of 9)

RADIO COOLING INSTALLATION

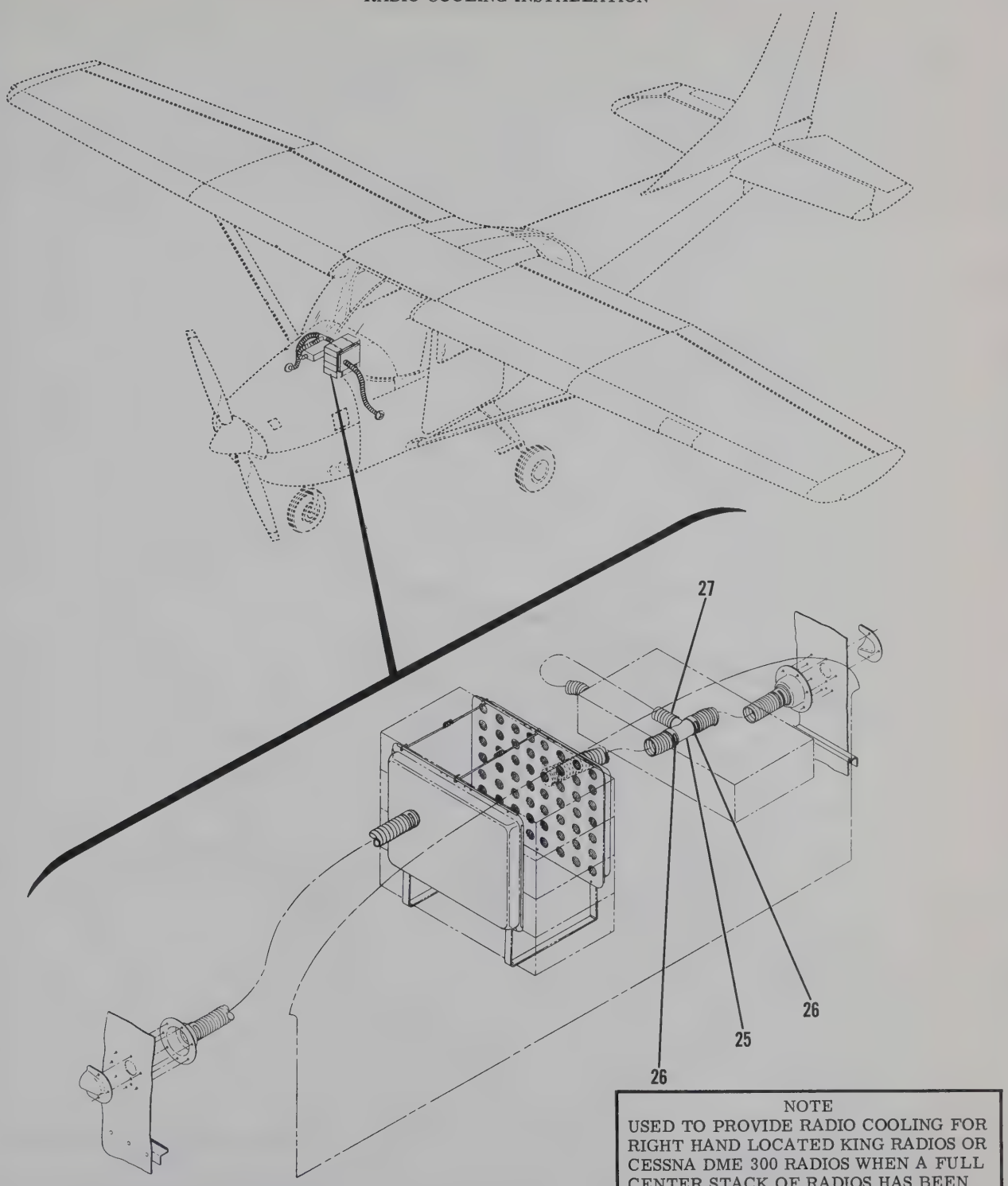

NOTE
USED TO PROVIDE RADIO COOLING FOR RIGHT HAND LOCATED KING RADIOS OR CESSNA DME 300 RADIOS WHEN A FULL CENTER STACK OF RADIOS HAS BEEN INSTALLED.

INSTALLATION **D** - ALL MODELS EXCEPT 177

Figure 5-1. Radio Cooling Installation (Sheet 4 of 9)

RADIO COOLING INSTALLATION

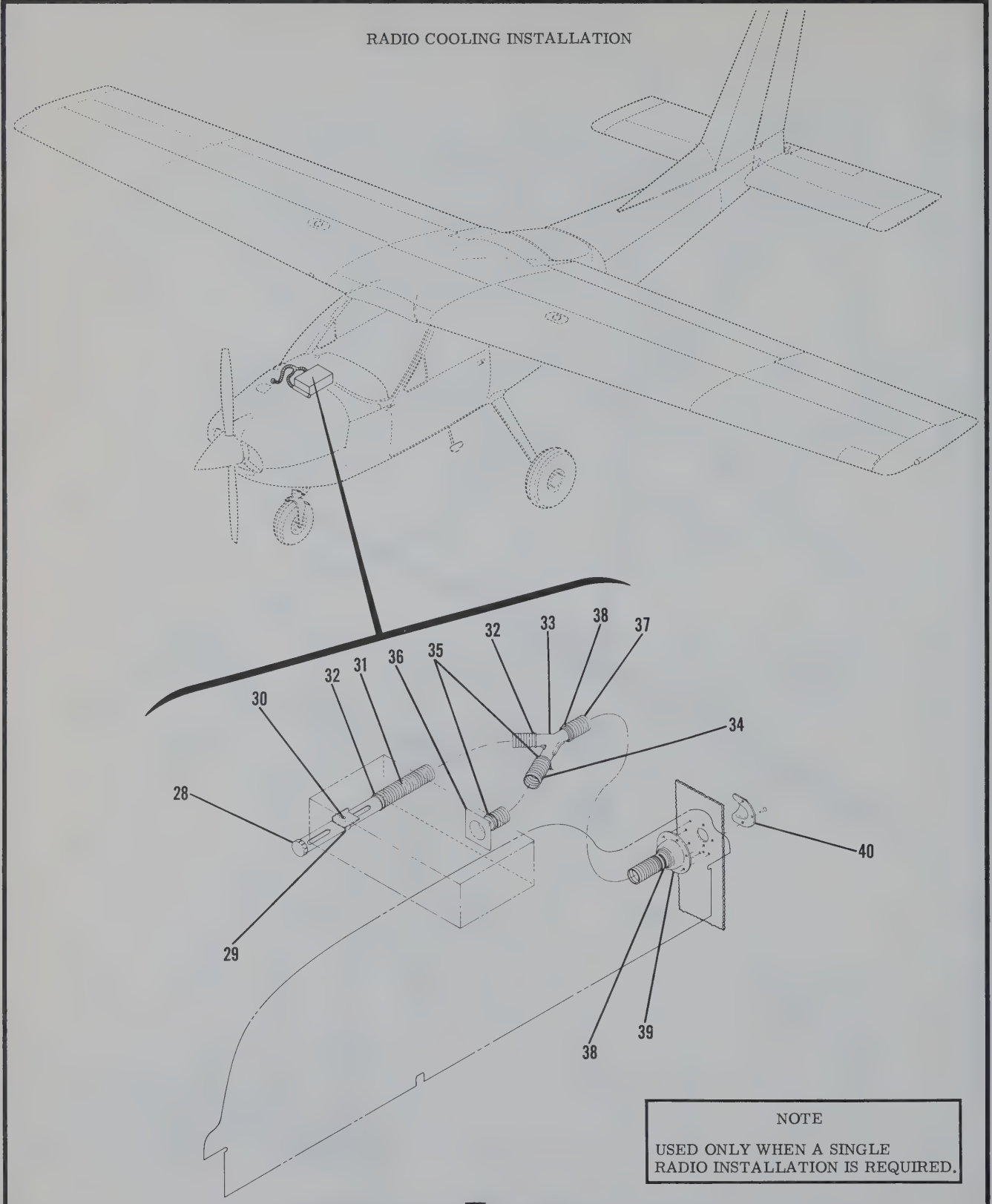

NOTE

USED ONLY WHEN A SINGLE RADIO INSTALLATION IS REQUIRED.

INSTALLATION **E** - MODEL 177 ONLY

Figure 5-1. Radio Cooling Installation (Sheet 5 of 9)

RADIO COOLING INSTALLATION

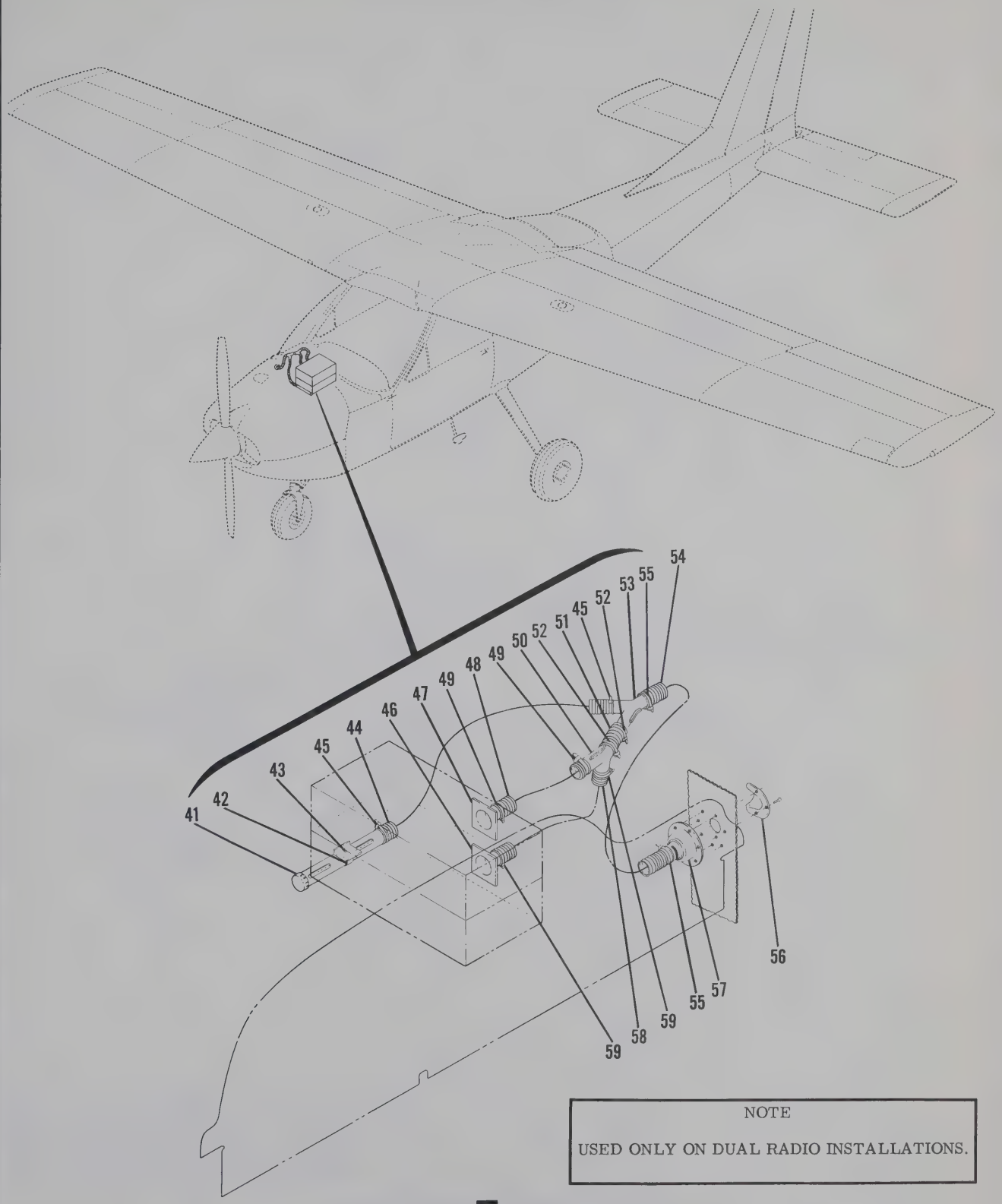

NOTE

USED ONLY ON DUAL RADIO INSTALLATIONS.

INSTALLATION **F** - MODEL 177 ONLY

Figure 5-1. Radio Cooling Installation (Sheet 6 of 9)

RADIO COOLING INSTALLATION

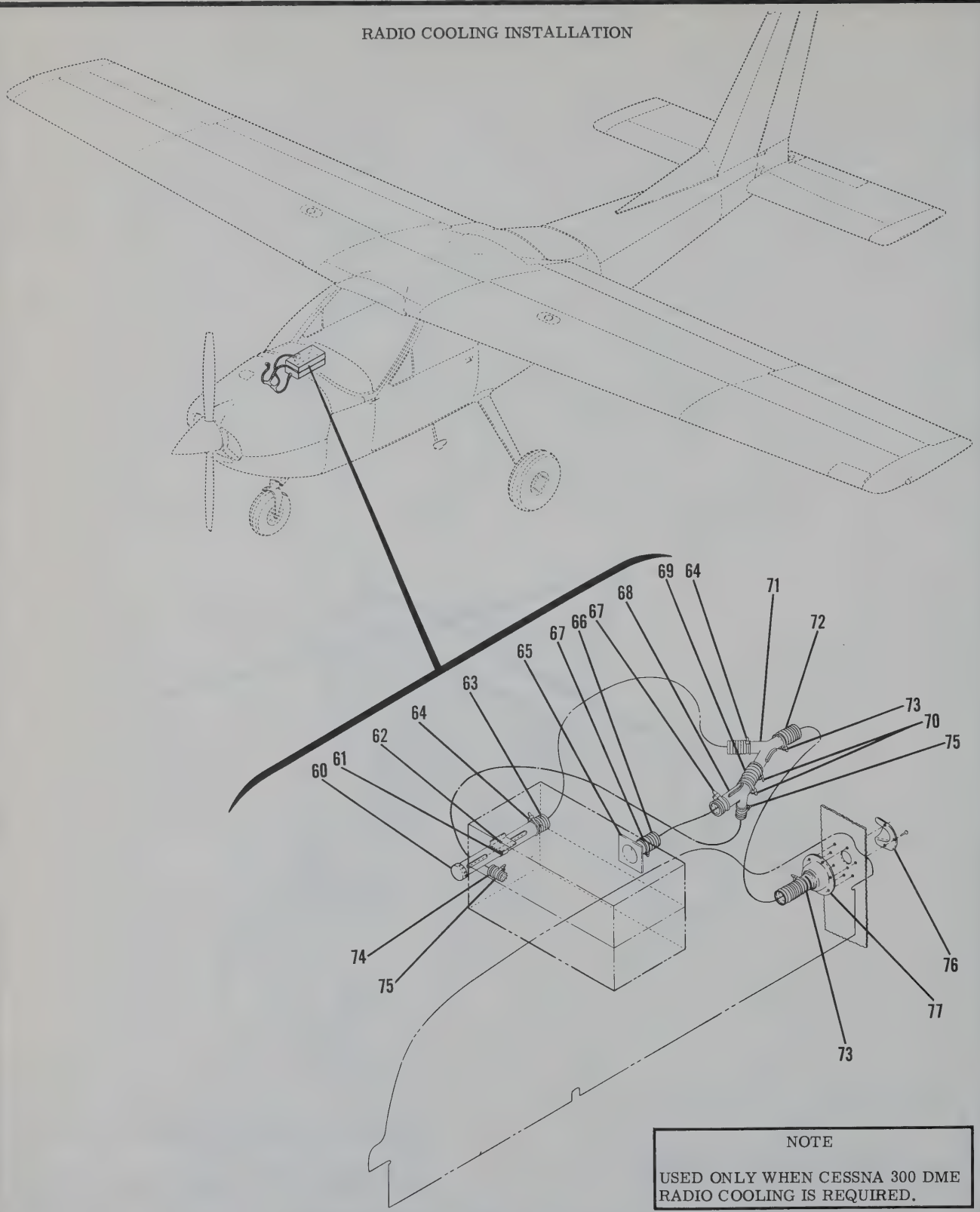

NOTE

USED ONLY WHEN CESSNA 300 DME RADIO COOLING IS REQUIRED.

INSTALLATION **G** - MODEL 177 ONLY

Figure 5-1. Radio Cooling Installation (Sheet 7 of 9)

RADIO COOLING INSTALLATION

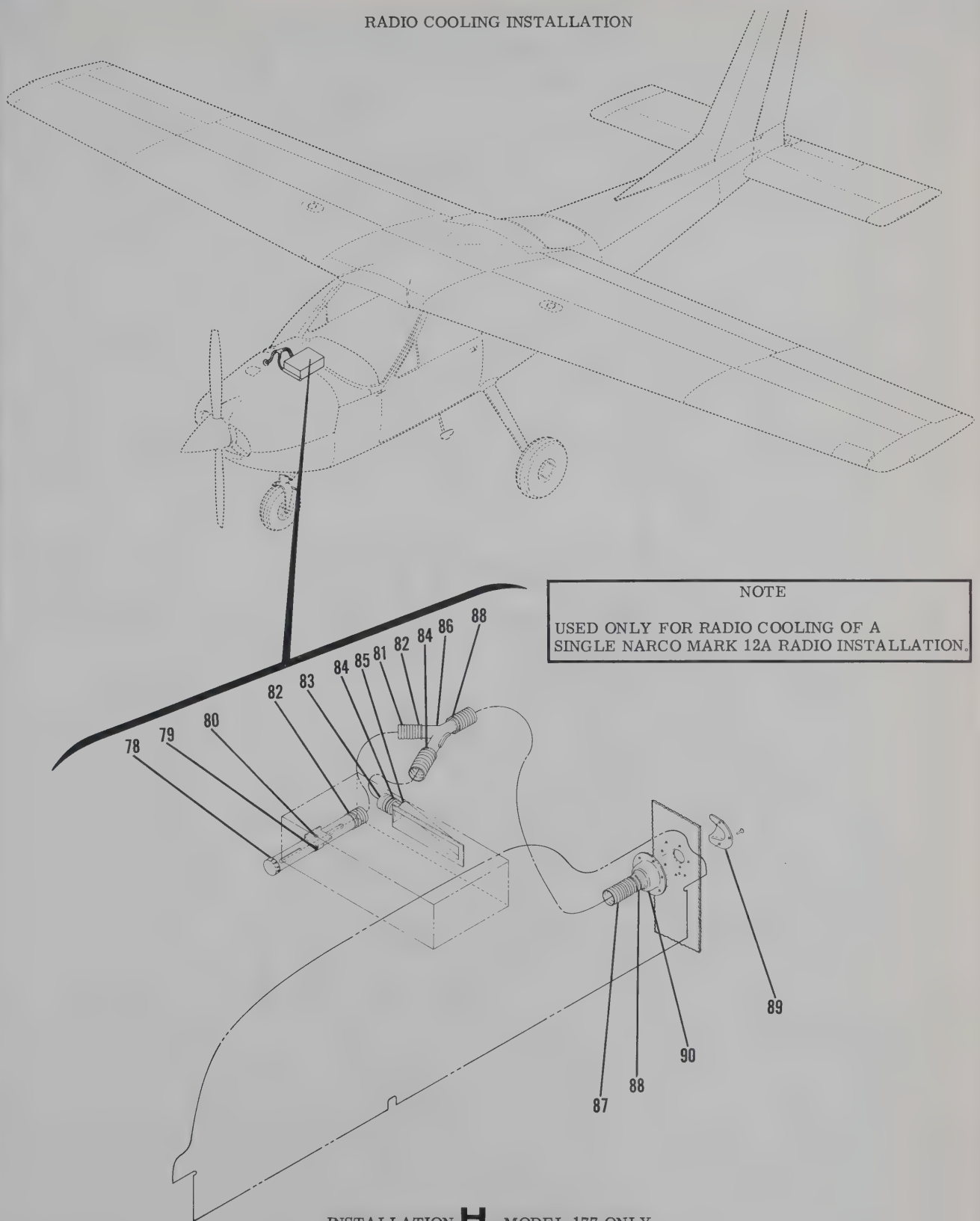

INSTALLATION **H** - MODEL 177 ONLY

Figure 5-1. Radio Cooling Installation (Sheet 8 of 9)

RADIO COOLING INSTALLATION

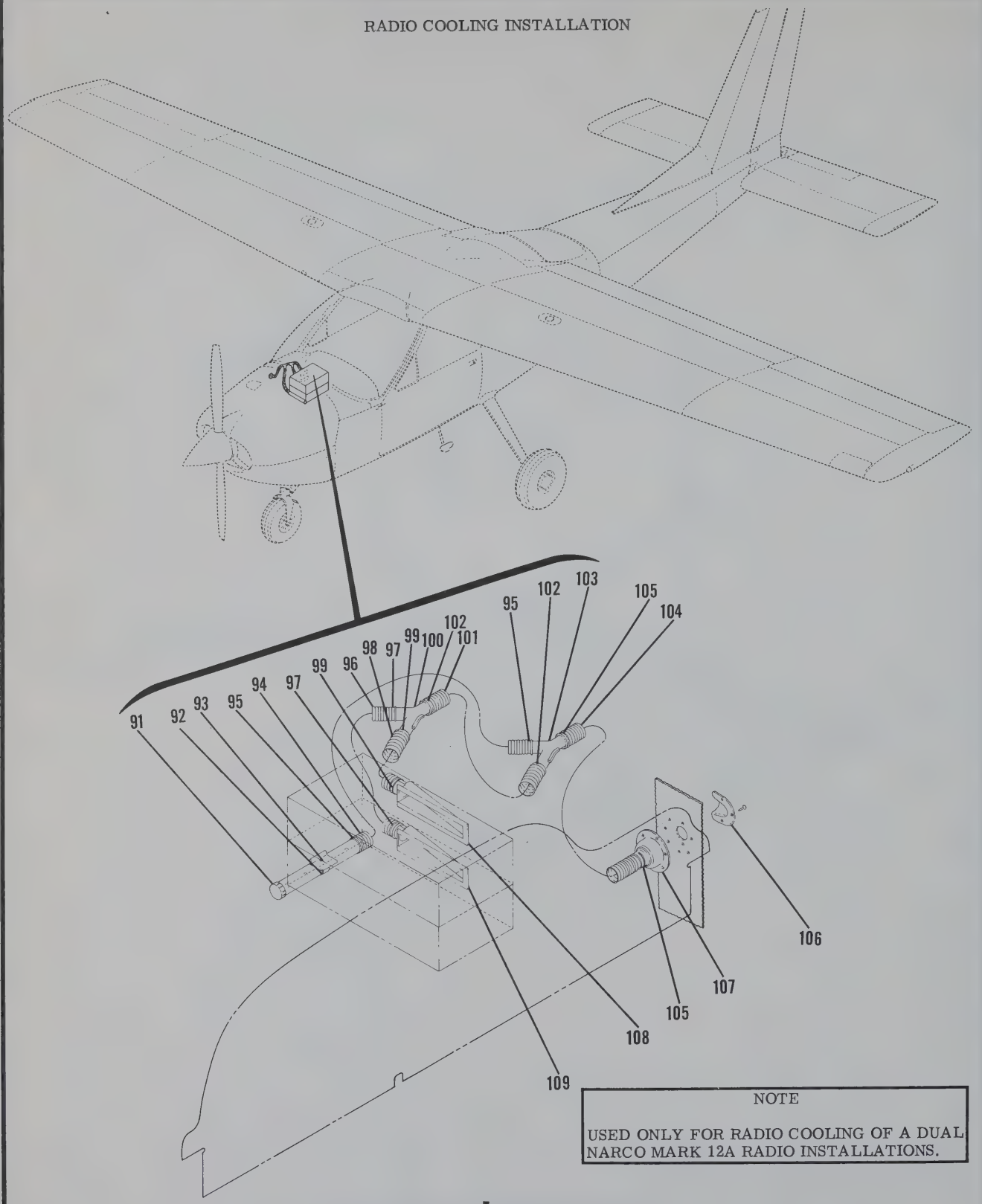

NOTE

USED ONLY FOR RADIO COOLING OF A DUAL NARCO MARK 12A RADIO INSTALLATIONS.

INSTALLATION J - MODEL 177 ONLY

Figure 5-1. Radio Cooling Installation (Sheet 9 of 9)

FIGURE AND INDEX NO.	PART NUMBER	DESCRIPTION 1 2 3 4 5 6 7	UNITS PER ASSY	USABLE ON CODE
5-1-		RADIO COOLING INSTALLATIONS	NP	
		NON-TSO RADIO COOLING INSTALLATION A 150, 172, 180 & 185 ONLY	NP	
- 1	1470219-1	SCOOP	2	
- 2	0770641-1	ADAPTER ASSY	2	
- 3	S1053E7T	HOSE 28 INCHES REQD FOR LEFT SIDE - 20 INCHES REQD FOR RIGHT SIDE	5FT	
		ATTACHING PARTS		
- 4	NAS397-16	CLAMP	4	
		---*---		
- 5	0570033-1	PLENUM CHAMBER	2	
		ATTACHING PARTS		
- 6	1470221-2	SPRING	4	
		---*---		
		NON-TSO RADIO COOLING INSTALLATION B 182, 206 SERIES, 207 SERIES & 210 SERIES ONLY	NP	
- 7	1470219-1	SCOOP	2	
- 8	0770641-1	ADAPTER ASSY	2	
- 9	S1053E7T	HOSE 3 FEET REQD EACH SIDE	6FT	
		ATTACHING PARTS		
- 10	NAS397-16	CLAMP	4	
		---*---		
- 11	1470220-8	PLENUM CHAMBER ASSY - L.H.	1	
- 12	1470220-1	PLENUM CHAMBER ASSY - R.H.	1	
		ATTACHING PARTS		
- 13	1470221-2	SPRING	2	
- 14	1470222-1	CLIP	2	
		---*---		
		NON-TSO RADIO COOLING INSTALLATION C 337 & T337 ONLY	NP	
- 15	1470219-1	SCOOP	2	
- 16	0770641-1	ADAPTER ASSY	2	
- 17	S1053E7T	HOSE 3 FEET REQD EACH SIDE	6FT	
		ATTACHING PARTS		
- 18	NAS397-16	CLAMP	4	
		---*---		
- 19	AN742D16	CLAMP ONE REQD EACH SIDE	2	
		ATTACHING PARTS		
	AN520-10R8C	SCREW	2	
	NAS679A3	NUT	2	
		---*---		
- 20	1470220-1	PLENUM CHAMBER ASSY	1	
		ATTACHING PARTS		
- 21	1470220-4	SUPPORT ANGLE	1	
	S1021Z6-8	SCREW	1	
		---*---		
- 22	1470220-8	PLENUM CHAMBER ASSY	1	
		ATTACHING PARTS		
- 23	1470220-5	SUPPORT ANGLE	1	
	S1021Z6-8	SCREW	1	
		---*---		
- 24	1470064-1	CLIP - SPRING	2	
		RADIO COOLING INSTALLATION D USED ONLY TO PROVIDE RADIO COOLING FOR RIGHT HAND LOCATED KING RADIOS OR CESSNA DME 300 RADIOS WHEN A FULL CENTER STACK HAS BEEN INSTALLED ALL MODELS	NP	
- 25	0770729-1	TEE ADAPTER ASSY	1	
		ATTACHING PARTS		
- 26	NAS397-14	CLAMP	2	
		---*---		
- 27	150-0038-00	DUCTING KG SUPPLIED WITH CESSNA DME 300 OR KING RADIOS ONLY	REF	

CONTINUED ON NEXT PAGE

FIGURE AND INDEX NO.	PART NUMBER	DESCRIPTION 1 2 3 4 5 6 7	UNITS PER ASSY	USABLE ON CODE
		SINGLE RADIO COOLING INSTALLATION E MODEL 177 ONLY	NP	
5-1- 28	1713242-1	AIR DUCT ASSEMBLY	1	
		ATTACHING PARTS		
- 29	AN742D14	CLAMP	1	
- 30	AN515-8R8	SCREW	1	
	NAS679A08	NUT	1	
		---*---		
- 31	S-1053E7T	TUBING BULK ITEM	AR	
		ATTACHING PARTS		
- 32	S-1693-2	STRAP	2	
		---*---		
- 33	1713241-1	DUCT ASSEMBLY	1	
- 34	S-1053E7T	TUBING	AR	
		ATTACHING PARTS		
- 35	S-1693-2	STRAP	2	
		---*---		
- 36	1713240-1	ADAPTER	1	
- 37	S-1053E7T	TUBING	AR	
		ATTACHING PARTS		
- 38	S-1693-2	STRAP	2	
		---*---		
- 39	C77C641-1	ADAPTER	1	
- 40	1470219-1	SCOOP	1	
		DUAL RADIO COOLING INSTALLATION F MODEL 177 ONLY	NP	
- 41	1713242-1	AIR DUCT ASSEMBLY	REF	
		ATTACHING PARTS		
- 42	AN742D14	CLAMP	REF	
- 43	AN515-8R8	SCREW	REF	
	NAS679A08	NUT	REF	
		---*---		
- 44	S-1053E7T	TUBING	REF	
		ATTACHING PARTS		
- 45	S-1693-2	STRAP	REF	
		---*---		
- 46	1713240-1	ADAPTER	1	
- 47	1713240-1	ADAPTER	REF	
- 48	S-1053E7T	TUBING	REF	
		ATTACHING PARTS		
- 49	S-1693-2	STRAP	2	
		---*---		
- 50	1713241-1	AIR DUCT ASSEMBLY	1	
- 51	S-1053E7T	TUBING	REF	
		ATTACHING PARTS		
- 52	S-1693-2	STRAP	2	
		---*---		
- 53	1713241-1	DUCT ASSEMBLY	REF	
- 54	S-1053E7T	TUBING	REF	
		ATTACHING PARTS		
- 55	S-1693-2	STRAP	REF	
		---*---		
- 56	1470219-1	SCOOP	REF	
- 57	C77C641-1	ADAPTER	REF	
- 58	S-1053E7T-18.0	TUBING	AR	
		ATTACHING PARTS		
- 59	S-1693-2	STRAP	2	

CONTINUED ON NEXT PAGE

FIGURE AND INDEX NO.	PART NUMBER	DESCRIPTION 1 2 3 4 5 6 7	UNITS PER ASSY	USABLE ON CODE
5-1-		CESSNA 300 DME RADIO CCOLING INSTL G MODEL 177 ONLY -----	NP	
- 60	1713242-1	AIR DUCT ASSEMBLY ----------	REF	
		ATTACHING PARTS		
- 61	AN742D14	CLAMP ----------	REF	
- 62	AN515-8R8	SCREW ----------	REF	
	NAS679A08	NUT ----------	REF	
		---*---		
- 63	S-1053E7T56.0	TUBING ----------	REF	
		ATTACHING PARTS		
- 64	S-1693-2	STRAP ----------	REF	
		---*---		
- 65	1713240-1	ADAPTER ----------	REF	
- 66	S-1053E7T56.0	TUBING ----------	REF	
		ATTACHING PARTS		
- 67	S-1693-2	STRAP ----------	REF	
		---*---		
- 68	1713241-3	DUCT ASSEMBLY ----------	1	
- 69	S-1053E7T56.0	TUBING ----------	REF	
		ATTACHING PARTS		
- 70	S-1693-2	STRAP ----------	2	
		---*---		
- 71	1713240-1	DUCT ASSEMBLY ----------	REF	
- 72	S-1053E7T56.0	TUBING ----------	REF	
		ATTACHING PARTS		
- 73	S-1693-2	STRAP ----------	REF	
		---*---		
- 74	150-0038-00	TUBING ---------- KG ---	1	
		ATTACHING PARTS		
- 75	S-1693-2	STRAP ----------	2	
		---*---		
- 76	1470219-1	SCOOP ----------	REF	
- 77	0770641-1	ADAPTER ----------	REF	
		SINGLE NARCO MARK 12A RADIO CCOLING INSTL H MODEL 177 ONLY	NP	
5-1- 78	1713242-1	AIR DUCT ASSEMBLY ----------	1	
		ATTACHING PARTS		
- 79	AN742D14-1	CLAMP ----------	1	
- 80	AN515-8R8	SCREW ----------	1	
	NAS1329A08	NUT ----------	1	
		---*---		
- 81	S-1053ET	TUBING ----------	AR	
		ATTACHING PARTS		
- 82	S-1693-2	STRAP ----------	2	
		---*---		
- 83	S-1053ET	TUBING ----------	AR	
		ATTACHING PARTS		
- 84	S-1693-2	STRAP ----------	2	
		---*---		
- 85	1713252-1	NOZZLE ASSEMBLY ----------	1	
- 86	1713241-1	DUCT ASSEMBLY ----------	1	
- 87	S-1053ET	TUBING ----------	AR	
		ATTACHING PARTS		
- 88	S-1693-2	STRAP ----------	2	
		---*---		
- 89	1470219-1	SCOOP ----------	1	
- 90	C770641-1	ADAPTER ----------	1	

CONTINUED ON NEXT PAGE

FIGURE AND INDEX NO.	PART NUMBER	DESCRIPTION 1 2 3 4 5 6 7	UNITS PER ASSY	USABLE ON CODE
5-1-		DUAL NARCO MARK 12A RADIO COOLING INSTL J MODEL 177 ONLY --	NP	
- 91	1713242-1	AIR DUCT ASSEMBLY	1	
		ATTACHING PARTS		
- 92	AN742D14	CLAMP	1	
- 93	AN515-8R8	SCREW	1	
	NAS1329A08-75	NUT	1	
		---*---		
- 94	S-1053ET	TUBING	AR	
		ATTACHING PARTS		
- 95	S-1693-2	STRAP	2	
		---*---		
- 96	S-1053E7T	TUBING	AR	
		ATTACHING PARTS		
- 97	S-1693-2	STRAP	2	
		---*---		
- 98	S-1053E7T	TUBING	AR	
		ATTACHING PARTS		
- 99	S-1693-2	STRAP	2	
		---*---		
-100	1713241-1	DUCT ASSEMBLY	1	
-101	S-1053ET	TUBING	AR	
		ATTACHING PARTS		
	S-1693-2	---*---	2	
		STRAP		
-103	1713241-1	DUCT ASSEMBLY	1	
-104	S-1053E7T	TUBING	AR	
		ATTACHING PARTS		
-105	S-1693-2	STRAP	2	
		---*---		
-106	147C219-1	SCOOP	1	
-107	0770641-1	ADAPTER	1	
-108	1713252-1	NOZZLE ASSEMBLY	1	
-109	1713242-2	ADAPTER	1	

RADIO NOISE FILTER INSTALLATIONS

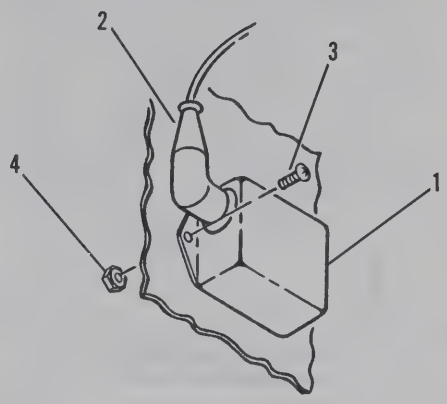

INSTALLATION **A**

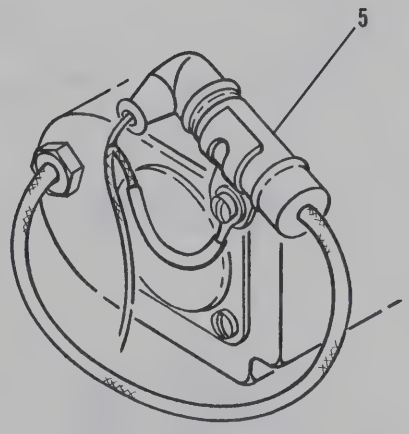

INSTALLATION **B**

Figure 5-2. Radio Noise Filter Installations - Sheet 1 of 2

RADIO NOISE FILTER INSTALLATIONS

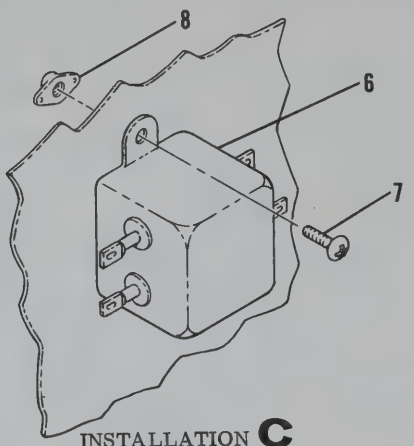

INSTALLATION **C**

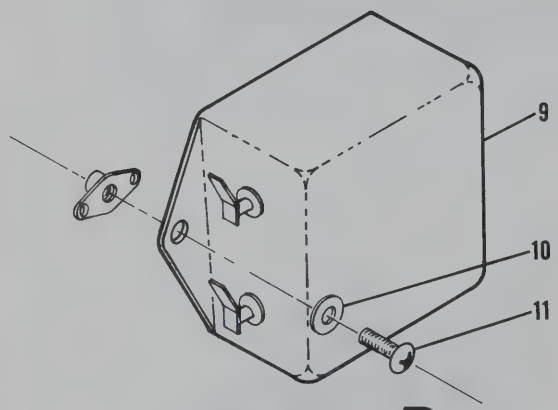

INSTALLATION **D**

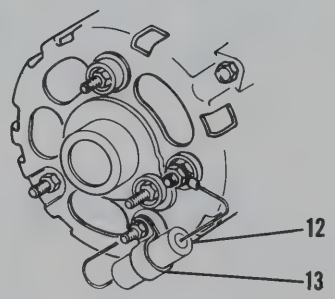

INSTALLATION **E**

Figure 5-2. Radio Noise Filter Installations - Sheet 2 of 2

FIGURE AND INDEX NO.	PART NUMBER	DESCRIPTION 1 2 3 4 5 6 7	UNITS PER ASSY	USABLE ON CODE
5-2-		RADIO NOISE FILTER INSTALLATIONS	NP	
		INSTALLATION A ALTERNATOR FILTER SOME EARLY AIRCRAFT ONLY		
- 1	C77C038-2	CONDENSER-RADIO NOISE WIRES NOT FURNISHED 2 REQD FOR 337 & T337	1	
- 2	NAS446-4-3	NIPPLE	1	
		ATTACHING PARTS		
- 3	AN515-8R8	SCREW	2	
- 4	NAS679A08	NUT SOME AIRCRAFT	2	
		---*---		
		INSTALLATION B MAGNETO FILTER USED WITH BENDIX MAGNETOS ONLY 337 & T337 ONLY	NP	
- 5	C77C622-1	FILTER-MAGNETO	4	
		INSTALLATION C COWL FLAP NOISE FILTER-337 & T337 ONLY	NP	
- 6	A-374A	FILTER CTAT	2	
		ATTACHING PARTS		
- 7	AN515-6R8	SCREW	4	
- 8	NAS697A06L	NUTPLATE	4	
		---*---		
		INSTALLATION D FLAP ACTUATOR NOISE FILTER	NP	
- 9	S1732-1	FILTER PART OF C301001-C303 FLAP MOTOR ASSY	1	
		ATTACHING PARTS		
- 10	AN960-8L	WASHER	2	
- 11	C5CC062	SCREW	2	
		---*---		
		INSTALLATION E ALTERNATOR FILTER	NP	
- 12	1250209-1	NOISE FILTER ASSY ALTERNATOR WHEN EXHAUSTED USE S1915-1	1	
	S1915-1	CAPACITOR-ALTERNATOR FILTER	1	
		ATTACHING PARTS		
- 13	AN742D12	CLAMP USED WITH 1250209-1 ONLY	1	
		---*---		

SECTION VI

ELECTRONIC LOADING CHARTS

TABLE OF CONTENTS

Figure	Equipment	Page
6-1	Electronic Loading Chart - Model 150 Only	6-2
6-2	Electronic Loading Chart - Model 172 Only	6-3
6-3	Electronic Loading Chart - Model 177 Only	6-5
6-4	Electronic Loading Chart - Models 180 & 185 Only	6-6
6-5	Electronic Loading Chart - Model 182 - Standard Locations	6-8
6-6	Electronic Loading Chart - Model 206 Series - RH Auxiliary Locations	6-10
6-7	Electronic Loading Chart - Model 207 Series - RH Auxiliary Locations	6-11
6-8	Electronic Loading Chart - Model 210 Series - Standard Locations	6-12

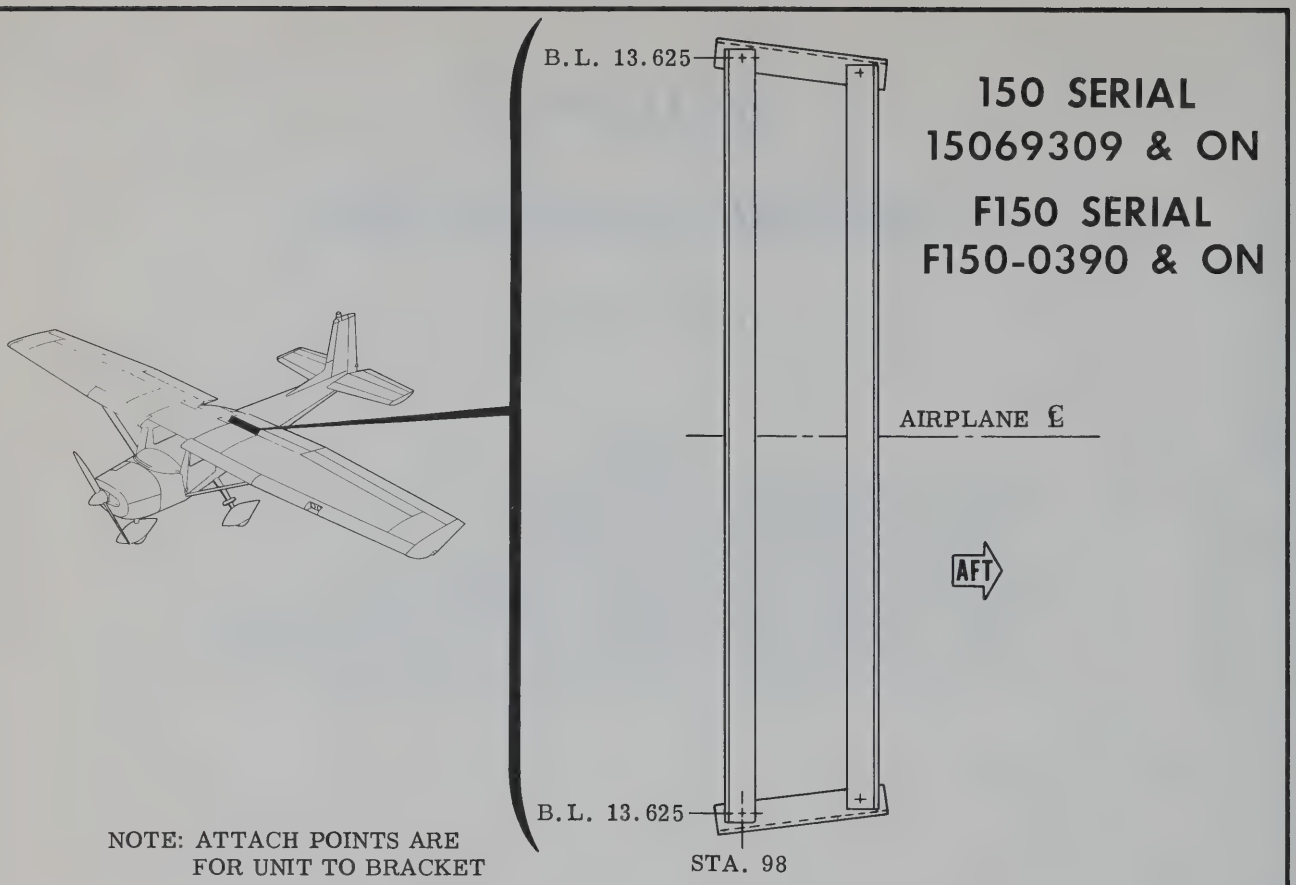

EQUIPMENT	FWD INBD ATTACH POINT		COMPONENT WEIGHT	LOCATION
	B. L.	STA.		
CESSNA				
300 TRANSPONDER POWER SUPPLY	2.3 (L)	98.0	6.0#	Position #1
400 GLIDE SLOPE POWER SUPPLY	3.5 (L)	99.3	2.9#	Position #1
KING				
KS-501A POWER SUPPLY	2.3 (L)	98.8	3.5#	Position #1
KS-505 POWER SUPPLY	1.5 (R)	99.2	4.0#	Position #1
KS-505 POWER SUPPLY	1.5 (L)	99.2	4.0#	Position #2
NARCO				
T12MP-12A POWER SUPPLY	2.5 (R)	98.2	4.1#	Position #1
T12MP-12A POWER SUPPLY	2.5 (L)	98.2	4.1#	Position #2
T12MP-12A POWER SUPPLY	1.4 (L)	98.0	4.1#	Used with UGR-2
UGR-2 RECEIVER	4.6 (L)	99.0	6.7#	Position #1

Figure 6-1. Electronic Loading Chart - Model 150

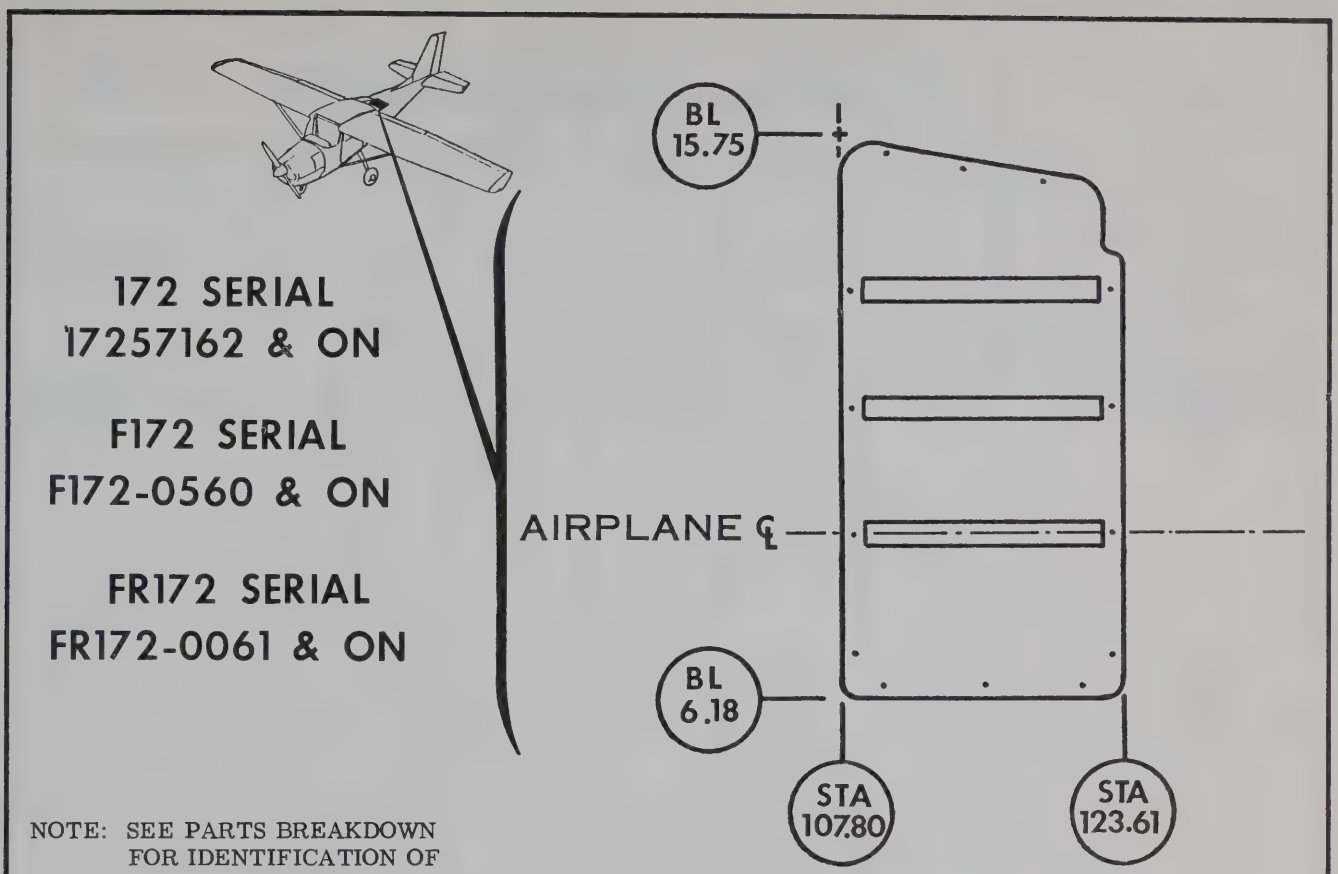

EQUIPMENT	FWD INBD ATTACH POINT		AFT INBD ATTACH POINT		COMPONENT WEIGHT	LOCATION
	B. L.	STA.	B. L	STA.		
CESSNA						
300 HF TRANSCEIVER POWER SUPPLY	2.13 (R&L)	110.0	2.13 (R&L)	118.75	8.6#	Note: Mounted on ℄ of Aircraft
300 TRANSPONDER POWER SUPPLY	7.68 (R)	110.0	7.68 (R)	118.75	6.0#	Position #1
400 GLIDE SLOPE POWER SUPPLY	.75 (R&L)	111.6	.75 (R&L)	120.1	2.9#	Note: Mounted on ℄ of Aircraft
KING						
KS-501A POWER SUPPLY	9.3 (R)	111.19	9.3 (R)	116.88	3.5#	Position #1
KS-501A POWER SUPPLY	5.6 (R)	111.19	5.6 (R)	116.88	3.5#	Position #2
KS-505 POWER SUPPLY	1.56 (R)	112.12	1.56 (R)	119.49	4.1#	Position #2
KS-505 POWER SUPPLY	7.69 (R)	112.12	7.69 (R)	119.49	4.1#	Position #1

Figure 6-2. Electronic Loading Chart - Model 172 (Sheet 1 of 2)

EQUIPMENT	FWD INBD ATTACH POINT		AFT INBD ATTACH POINT		COMPONENT WEIGHT	LOCATION
	B. L.	STA.	B. L.	STA.		
NARCO						
T12MP-12A POWER SUPPLY	8.5 (R)	111.62	8.5 (R)	117.12	4.1#	Position # 1
T12MP-12A POWER SUPPLY	3.0 (R)	111.62	3.0 (R)	117.12	4.1#	Position # 2
UGR-2 GLIDESLOPE RECEIVER	2.8 (R&L)	111.00	2.8 (R&L)	120.9	3.1#	Note: Mounted on ℄ of Aircraft.

Figure 6-2. Electronic Loading Chart - Model 172 (Sheet 2 of 2)

177 SERIAL 17701165 & ON

NOTE: SEE PARTS CATALOG FOR PART NUMBER OF FLOORBOARD.

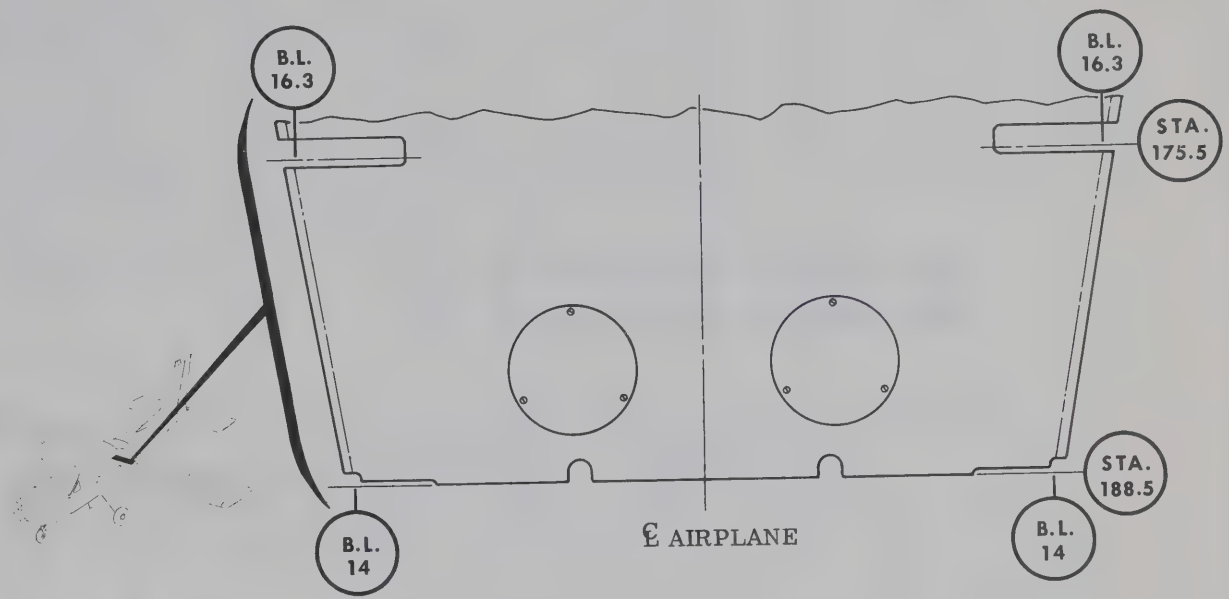

EQUIPMENT	FWD INBD ATTACH POINT		AFT INBD ATTACH POINT		COMPONENT WEIGHT	LOCATION
	B. L.	STA.	B. L.	STA.		
CESSNA						
300 HF TRANSCEIVER POWER SUPPLY	9.45 (R)	176.6	9.45 (R)	185.40	8.6#	Position #1
300 TRANSPONDER POWER SUPPLY	2.60 (L)	176.0	2.60 (L)	184.75	6.0#	Position #1
400 GLIDE SLOPE POWER SUPPLY	8.11 (L)	177.00	8.11 (L)	185.50	2.9#	Position # 1
NARCO						
T12MP-12A PWR SUPPLY	.50 (L)	176.05	.50 (L)	179.80	4.1#	Position # 1
T12MP-12A PWR SUPPLY	7.55 (L)	176.92	7.55 (L)	182.42	4.1#	Position # 2
UGR-2 GLIDE SLOPE RECEIVER	12.47 (L)	176.43	12.47 (L)	183.30	2.9#	Position # 1

Figure 6-3 Elecronic Loading Chart- Model 177

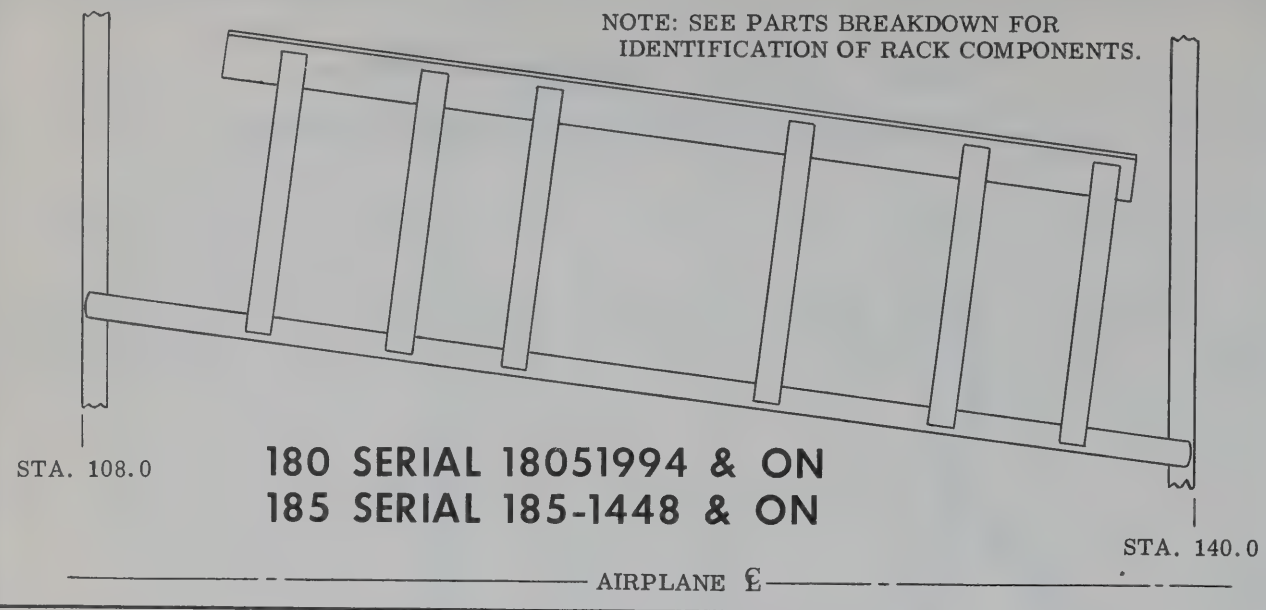

EQUIPMENT	FWD INBD ATTACH POINT		AFT INBD ATTACH POINT		COMPONENT WEIGHT	LOCATION
	B. L.	STA.	B. L.	STA.		
CESSNA						
300 HF TRANSCEIVER POWER SUPPLY	7.14 (R)	111.95	6.08 (R)	126.45	8.6#	Position #1
300 TRANSPONDER POWER SUPPLY	7.15 (R)	114.32	5.9 (R)	130.32	6.0#	Position #1
400 GLIDE SLOPE RECEIVER (R-543)	8.55 (R)	128.60	7.4 (R)	137.00	2.9#	Position # 1
400 TRANSCEIVER (RTA-532B) PWR SUPPLY	8.4 (R)	113.05	7.85 (R)	117.15	2.2#	Position # 1
400 NAV/COM (RTA-532B) PWR SUPPLY	12.1 (R)	113.55	11.55 (R)	117.65	2.2#	Position # 2

Figure 6-4. Electronic Loading Chart - Models 180 & 185 (Sheet 1 of 2)

EQUIPMENT	FWD INBD ATTACH POINT		AFT INBD ATTACH POINT		COMPONENT WEIGHT	LOCATION
	B.L.	STA.	B.L.	STA.		
NARCO						
T12MP-12A MODULATOR POWER SUPPLY	8.1 (R)	113.0	7.6 (R)	116.6	4.1#	Position # 1
T12MP-12A MODULATOR POWER SUPPLY	7.3 (R)	118.3	6.9 (R)	124.0	4.1#	Position # 2
UGR-2 GLIDE SLOPE RECEIVER	5.4 (R)	126.6	4.0 (R)	136.4	2.9#	Position # 1

Figure 6-4. Electronic Loading Chart - Models 180 & 185 (Sheet 2 of 2)

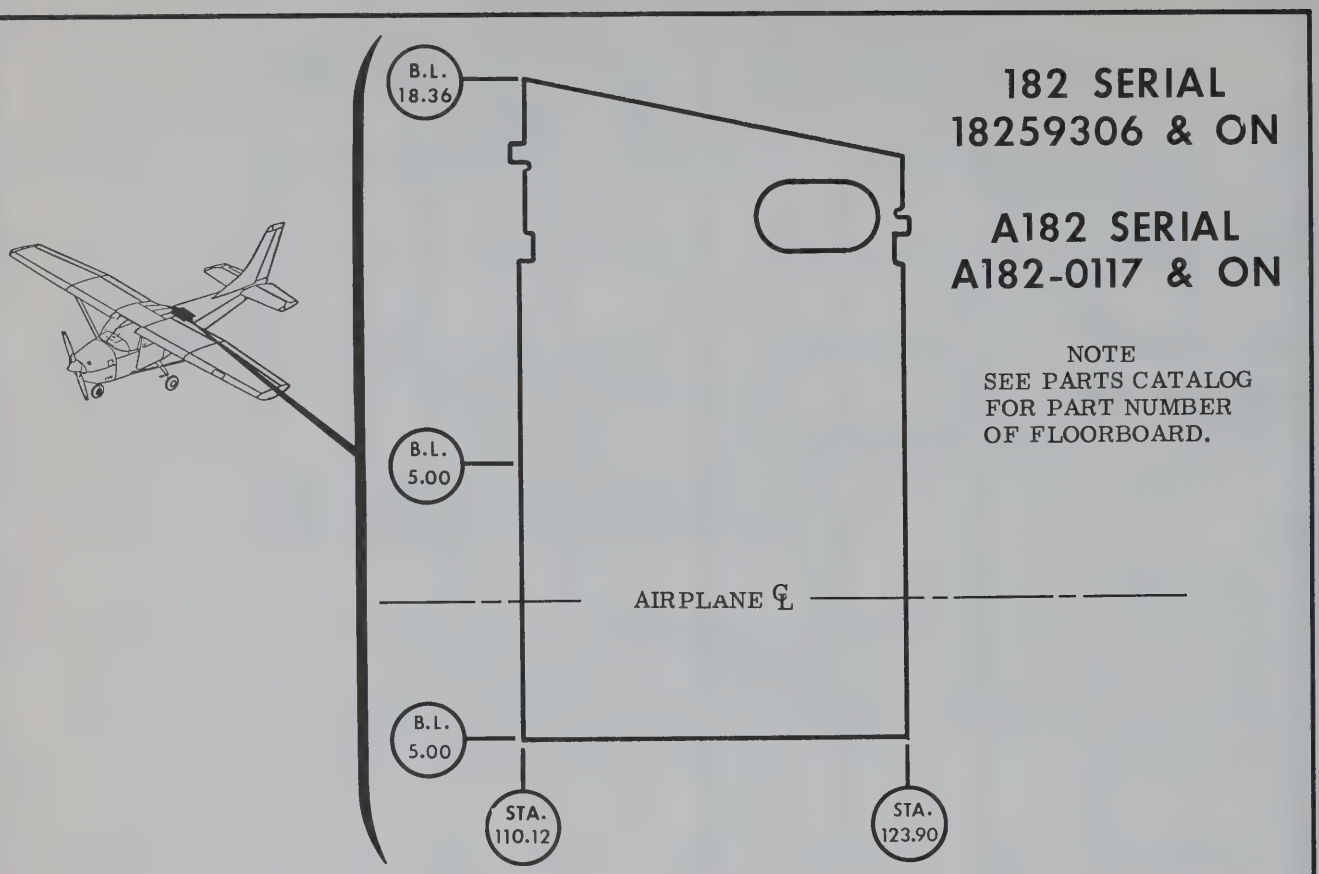

EQUIPMENT	FWD INBD ATTACH POINT		AFT INBD ATTACH POINT		COMPONENT WEIGHT	LOCATION
	B. L.	STA.	B. L.	STA.		
CESSNA						
300 HF TRANSCEIVER POWER SUPPLY	6.74 (R)	111.76	11.49 (R)	111.76	8.6#	Position #1
300 TRANSPONDER POWER SUPPLY	.60 (L)	111.26	.60 (L)	120.01	6.0#	Position #1
400 GLIDE SLOPE RECEIVER (R-543)	2.22 (L)	111.94	2.22 (L)	120.44	2.9#	Position # 1
400 TRANSCEIVER (RTA-532B) POWER SUPPLY	5.60 (R)	113.52	5.60 (R)	117.64	2.2#	Position # 1
400 NAV/COM (RTA-532B) PWR SUPPLY	8.68 (R)	113.52	8.68 (R)	117.64	2.2#	Position # 2
400 TRANSPONDER POWER SUPPLY	.62 (R)	111.46	.62 (R)	119.96	6.0#	Positon #1

Figure 6-5. Electronic Loading Chart - Model 182 - Standard Locations (Sheet 1 of 2)

EQUIPMENT	FWD INBD ATTACH POINT		AFT INBD ATTACH POINT		COMPONENT WEIGHT	LOCATION
	B. L.	STA.	B. L.	STA.		
NARCO						
T12MP-12A POWER SUPPLY	7.6 (R)	112.0	7.6 (R)	117.5	4.1#	Position # 2
T12MP-12A POWER SUPPLY	12.4 (R)	112.0	12.4 (R)	117.5	4.1#	Position # 1
UGR-2 RECEIVER	1.7 (L)	116.6	1.7 (L)	123.4	2.9#	Position # 1

Figure 6-5. Electronic Loading Chart - Model 182 - Standard Locations (Sheet 2 of 2)

P206 SERIAL P206-0520 & ON
U206 SERIAL U206-1235 & ON
TP206 SERIAL TP206-0520 & ON
TU206 SERIAL TU206-1235 & ON

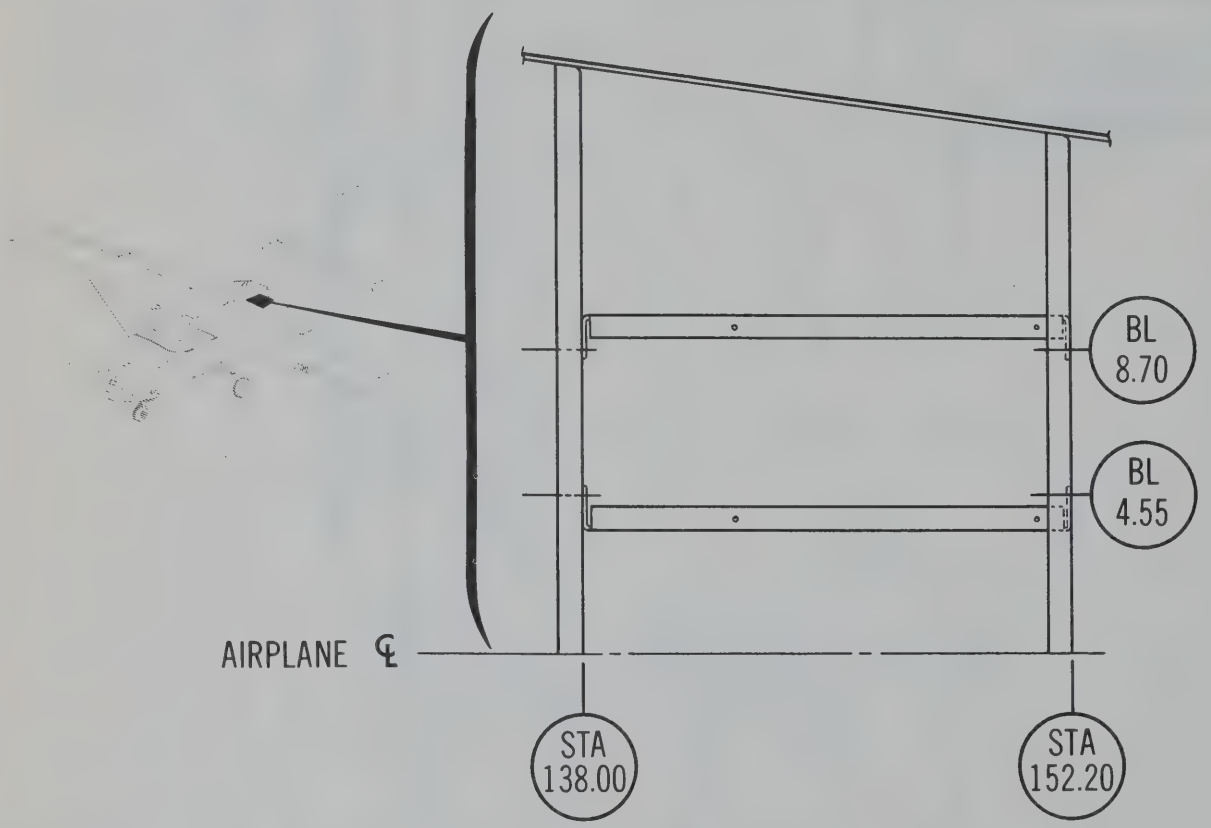

EQUIPMENT	FWD INBD ATTACH POINT		AFT INBD ATTACH POINT		COMPONENT WEIGHT	LOCATION
	B.L.	STA.	B.L.	STA.		
CESSNA						
300 TRANSPONDER POWER SUPPLY	4.0 (R)	142.45	4.0 (R)	151.20	6.0#	Position # 1

Figure 6-6. Electronic Loading Chart - Model 206 Series - RH Auxiliary Locations

207 SERIAL 207-0001 & ON
T207 SERIAL 207-0001 & ON

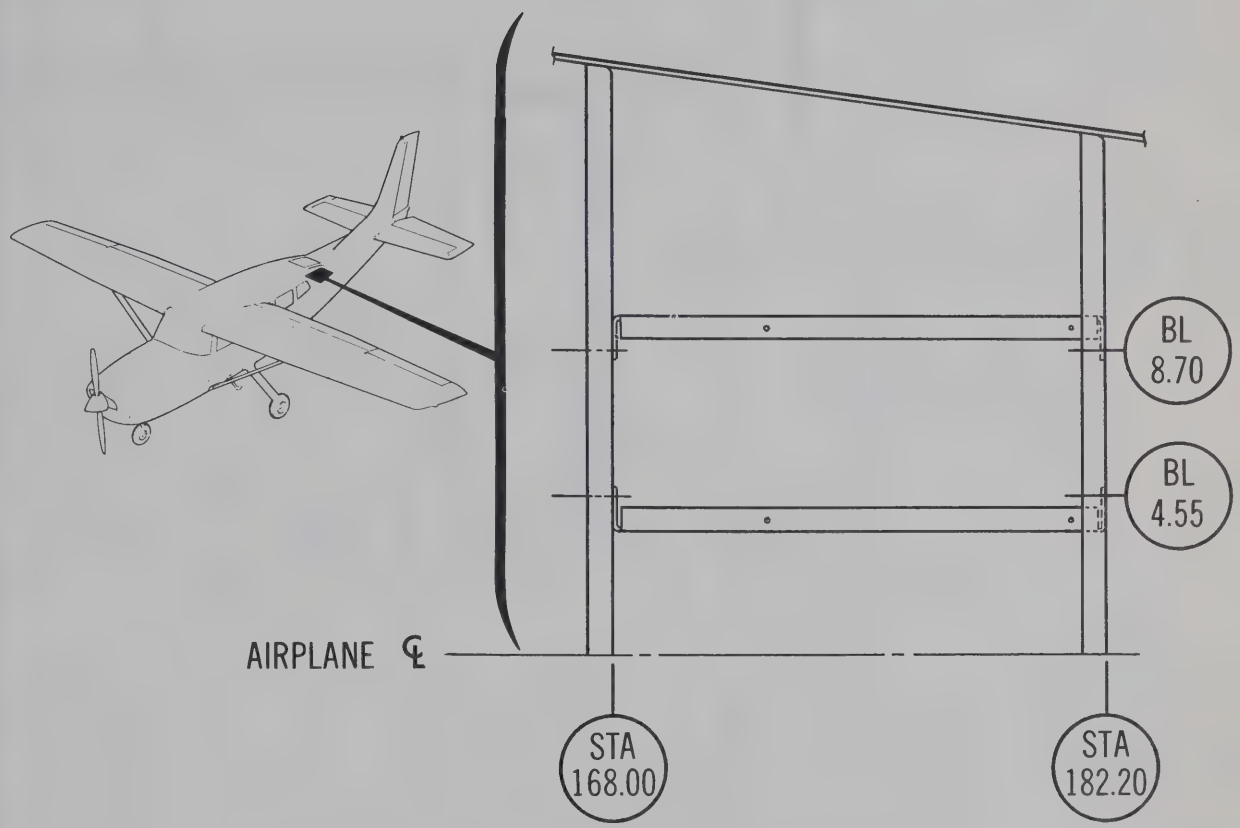

EQUIPMENT	FWD INBD ATTACH POINT		AFT INBD ATTACH POINT		COMPONENT WEIGHT	LOCATION
	B.L.	STA.	B.L.	STA.		
CESSNA						
300 TRANSPONDER POWER SUPPLY	4.0 (R)	172.43	4.0 (R)	181.20	6.0#	Position # 1

Figure 6-7. Electronic Loading Chart - Model 207 Series - RH Auxiliary Locations

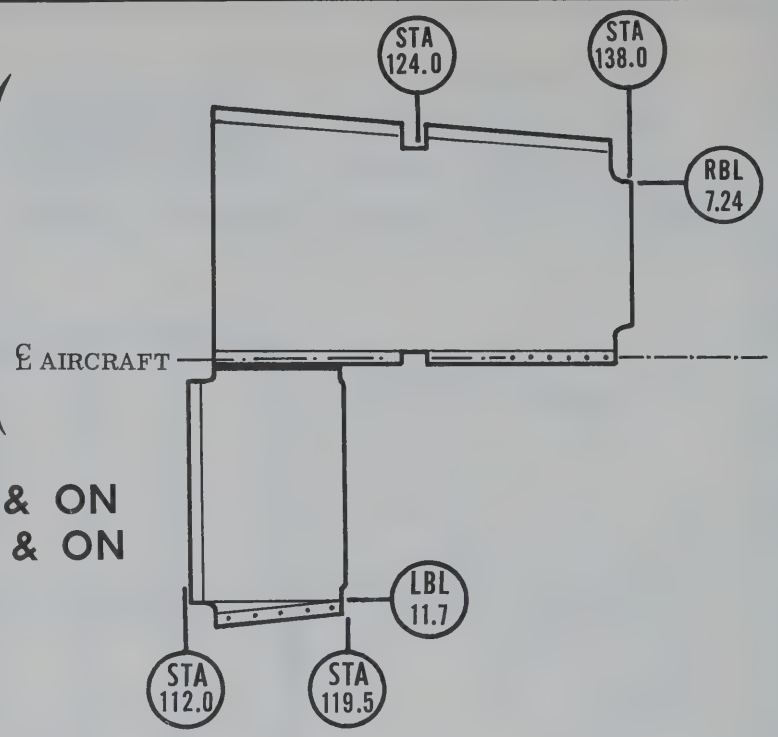

210 SERIAL 21059062 & ON
T210 SERIAL T210-0393 & ON

NOTE: SEE PARTS BREAKDOWN FOR IDENTIFICATION OF RACK COMPONENTS.

EQUIPMENT	FWD INBD ATTACH POINT		AFT INBD ATTACH POINT		COMPONENT WEIGHT	LOCATION
	B. L.	STA.	B. L.	STA.		
CESSNA						
300 HF TRANSCEIVER POWER SUPPLY	1.0 (R)	114.3	1.0 (R)	119.0	8.6#	Position # 1
300 TRANSPONDER POWER SUPPLY	1.0 (R)	121.09	1.0 (R)	129.84	6.0#	Position # 1
400 GLIDE SLOPE RECEIVER (R-543)	.75 (R)	135.4	.75 (R)	126.9	2.9#	Position # 1
400 TRANSCEIVER (RTA-532B) PWR SUPPLY	7.24 (R)	130.58	7.24 (R)	134.7	2.2#	Position # 1
400 NAV COM (RTA-532B) PWR SUPPLY	4.1 (R)	130.58	4.1 (R)	134.7	2.2#	Position # 2
400 RECEIVER (RT-506A)	6.3 (R)	127.4	6.3 (R)	135.9	4.8#	Position # 1

Figure 6-8. Electronic Loading Chart - Model 210 Series - Standard Locations (Sheet 1 of 2)

EQUIPMENT	FWD INBD ATTACH POINT		AFT INBD ATTACH POINT		COMPONENT WEIGHT	LOCATION
	B.L.	STA.	B.L.	STA.		
NARCO						
T12MP-12A POWER SUPPLY	5.7 (R)	124.8	5.7 (R)	130.3	4.1#	Position # 1
T12MP-12A POWER SUPPLY	.7 (R)	124.8	.7 (R)	130.3	4.1#	Position # 2
UGR-2 GLIDE SLOPE RECEIVER	8.75 (R)	125.87	8.75 (R)	132.74	2.9#	Position # 1

Figure 6-8. Electronic Loading Chart - Model 210 Series - Standard Locations (Sheet 2 of 2)

THE RADIO DIAGRAMS ARE DIVIDED INTO MODELS AS FOLLOWS:

THUMB INDEX

SECTION VII

ELECTRONIC WIRING DIAGRAMS

NOTE

The page numbering method in this Section differs from that of the rest of the book. However, each model section begins with an index of diagrams contained therein, which will facilitate locating any particular diagram.

MODEL 150
MODEL F150

MODEL 172
MODEL F172
MODEL FR172

MODEL 177

MODEL 180
MODEL 185

MODEL 182
MODEL A182

MODEL 188

MODEL 206 SERIES

MODEL 207 SERIES

MODEL 210 SERIES

MODEL 337 SERIES

NOTES

1. WIRE CODE DESIGNATIONS PER CES 1100.

2. WIRE CODE APPLICATION AND WIRE LENGTH TOLERANCES PER CES 1015.

3. "S" SUFFIX ON WIRE GAUGE IN WIRE TABLE DENOTES SHIELDED WIRE.
   "DS" SUFFIX ON WIRE GAUGE IN WIRE TABLE DENOTES A DOUBLE-SHIELDED WIRE PER S-1462.

4. NON-SHIELDED WIRES TO BE PER S-1460 WHITE. WIRES 10-GAUGE AND LARGER TO BE TYPE II CONSTRUCTION.

5. SHIELDED WIRES TO BE PER S-1461 WHITE, UNLESS DESIGNATED OTHERWISE BY NOTE ON THE FIELD OF THE WIRING DIAGRAM.

6. PART NUMBERS SHOWN IN THE "EQUIPMENT TABLE" OF THE VARIOUS PAGES ARE FOR REFERENCE ONLY, AND DO NOT CONSTITUTE A MATERIAL REQUIREMENT UNLESS SPECIFICALLY NOTED ON THE INDIVIDUAL PAGE. REFER TO THE VARIOUS EQUIPMENT INSTALLATION DRAWINGS FOR VERIFICATION OF PART NUMBERS.

7. EQUIPMENT PART NUMBERS SHOWN ON THE VARIOUS PAGES THAT ARE FOR REFERENCE ONLY, (SEE NOTE 6), WILL NOT BE CHANGED UNLESS IT AFFECTS WIRE TERMINALS AND FABRICATION.

8. VENDOR CODES PER S-1400. VENDOR CODES ARE SHOWN IN PARENTHESIS.

9. WIRES NOTED HEREIN AS ("OPT") ARE OPTIONAL TO THE STANDARD AIRPLANE.

10. ALL WIRES NOT SPECIFIED AS ("OPT") ARE TO BE INSTALLED AS STANDARD EQUIPMENT. THE AIRPLANE ASSEMBLY WILL SPECIFY THE ADDITIONAL EQUIPMENT REQUIRED FOR DELUXE VERSIONS.

11. WHEN ("OPT") IS USED IN THE TITLE BLOCK OF A DIAGRAM, ALL WIRES SHOWN THEREIN ARE OPTIONAL EXCEPT WHERE NOTED AS ("STD").

TABLE OF CONTENTS

PAGE NO.	TITLE	DATE ISSUED	REV
	150 SERIAL 15069309 & ON **F150 SERIAL F150-0390 & ON**		
2.0.1	W.D. - Radio Audio, Power & Lighting	9-4-68	D
2.1.2	W.D. - King KY-95E	5-12-66	NC
2.8.2	Cessna Com 300 (ARC Type 524A)	8-14-64	NC
2.11.1	W.D. - Cessna Nav/Com 300R (ARC Type 514R, 515R 540A, 515R-1 & 517R)	4-28-67	B
2.11.2	W.D. - Cessna Nav /Com 300R (ARC Type 515R-1, 540A)	4-28-67	B
2.12	W.D. - Cessna ADF 300 (ARC Type 521B)	4-28-67	B
2.16	W.D. - Transmitter Selector Switch & Muting Relay	6-13-68	D
2.20.1	W.D. - Cessna Mkr Bcn 300 (ARC Type R-502B)	2-18-67	B-Inac
2.21.1	W.D. - Narco Mark 12 & 12A	1-17-68	C
2.22.2	W.D. - King KX-160E Nav/Com	1-15-68	B
2.22.3	W.D. - King KX-160E Nav/Com	1-15-68	B
2.24.3	W.D. - King KA-25C Isolation Amplifier	9-19-68	NC
2.25.1	W.D. - Narco UGR-2 Glideslope With Narco Mark 12A & VOA-9	11-29-67	A
2.26.1	W.D. - Cessna 400 Glideslope (ARC Type R-543B)	12-20-67	A
2.27.1	W.D. - Cessna 400 Glideslope (ARC Type R-543B)	2-6-67	NC
2.28	W.D. - Audio Switching - Dual Narco Mark 12A	6-13-68	A
2.29.1	W.D. - Cessna 300 Transponder	2-3-69	A

(S.R. 4040) XI

NOTES:
1. WIRES SHALL BE OF SUFFICIENT LENGTH TO CONNECT WITH ALL POSSIBLE RADIO COMBINATIONS.
2 ~~WIRE/MATERIAL/PER/S-1460~~

CHG LET	REVISION	BY DATE	CHK APPD
A	ADDED GRN & BLK SPKR WIRES; ADDED WIRE LENGTHS; INACTIVATED GRN, YEL, GRN & BLK WIRES; ADDED DETAIL "A" & "B"; ADDED YEL, YEL, YEL & GRN WIRES (SR4839)	WJK 6-7-65	
B	BY REV: ADD DETAIL A & SER, GRN(4) WIRE & SER, BLK(2) & SER, BLK(1) WAS BLK, GRN(1) WAS GRN, GRN(2) WAS GRN, GRN(3) WAS GRN ED&RR 01347 (SR5437) IX	CG 1-22-68	RLL
C	BY REV: ADD DETAIL B & SER ED&RR 01832 (SR5437) IX	RLY 4-6-68	GKL MDS
D	BY REV: ADD GRN(5), ITEMS 5 & 6; CHANGED TERMINALS ON GRN(4) TO AGREE; ADD C596505-0101 TO SPEAKER IN DETAIL A; S-1880-1 WAS XR5150; DELETED NOTE 2 ED&RR 10037 (SR5437) IX	RBI 8-26-68	GKL MDS

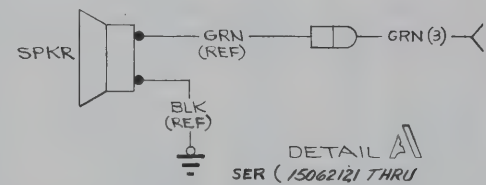

DETAIL A1
SER (15062121 THRU SER (15069308)

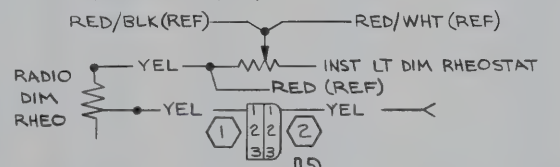

DETAIL B3
EFF 15061533 THRU SER(15069308)

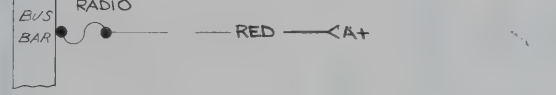

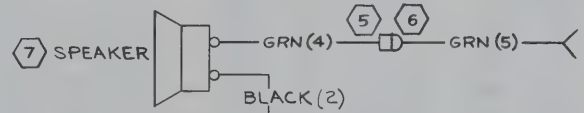

DETAIL A1
SER (15069309) & ON

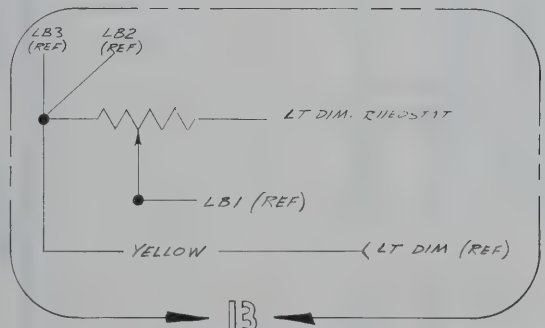

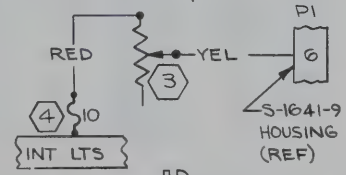

DETAIL B3
SER (15069309) & ON

CODE NO.	GA	MATERIAL	LG	TERMINALS			SERIALS
GRN(5)	20	-20-5		S-1370-1	S-1636-1		
RED	18	-18-2		SOLDER	SOLDER		SER(15069309) & ON
YELLOW	18	-18-4		SOLDER	S-1636-1		SER(15069309) & ON
BLACK(2)	22	-22-0		S-1829-1	S-1367-1-8		SER(15069309) & ON
GRN(4)	20	-20-5		S-1635-1	S-1829-1	(STD)	SER(15069309) & ON
GRN(3)	20	-20-5	70	S-341-2	S-1635-1 S-1637-1	(STD)	SER(15062121) THRU SER(15069308)
YELLOW	18	-18-4	5	SOLDER	SOLDER		15061533 THRU SER(15069308)
YELLOW	18	-18-4	12	S-1636-2	SOLDER		15061533 THRU SER(15069308)
YELLOW	18	-18-4	110	S-341-2	S-1635-2	(STD)	15061533 THRU SER(15069308)
BLACK	22	-22-0	9	SOLDER	S-1367-1-8		INACTIVE (15062121) & ON
GRN(1)	20	-20-5	9	SOLDER	S-341-2		INACTIVE (15062121) & ON
YELLOW	18	-18-4	51	SOLDER	S-341-2		INACTIVE 15061533 & ON
RED	16	-16-2	21	SOLDER	S-341-1		
BLACK	22	-22-0	40	SOLDER	S-341-2		
WHT/BLK	22	-22-9-0	40	SOLDER	S-341-2		
TAN	22	-22-10	40	SOLDER	S-341-2		
GRN(2)	20	-20-5	70	S-341-2	S-341-2	(STD)	INACTIVE (15062121) & ON

2 WIRE TABLE

ITEM NO	PART NO.	DESCRIPTION	INSTALLED ON
7	C596505-0101	SPEAKER	
6	S-1637-2	HOUSING - PLUG	
5	S-1637-1	HOUSING - CAP	
4	S-1091-10	FUSE	
3	S-1880-1	RHEOSTAT	
2	S-1638-2	HOUSING - CAP	
1	S-1638-1	HOUSING - PLUG	

EQUIPMENT TABLE

CESSNA AIRCRAFT CO., COMMERCIAL AIRCRAFT DIVISION, WICHITA, KANSAS

	NAME	DATE
DRAWN	ALTHER	6-25-63
GROUP	PARSONS	8-9-63
CHECK	R. [illegible]	8-8-63
PROJ	[illegible]	8-9-63

TITLE: WIRING DIAGRAM — RADIO AUDIO, POWER, & LIGHTING

Cessna.

DWG NO: 0470400

SUPERSEDED BY | SUPERSEDES 0410011 PAGE 17.1 | MODEL: 150 | REV D | PAGE 20.1

FORM NO. 80-161

CHG LET	REVISION	BY DATE	CHK APPD

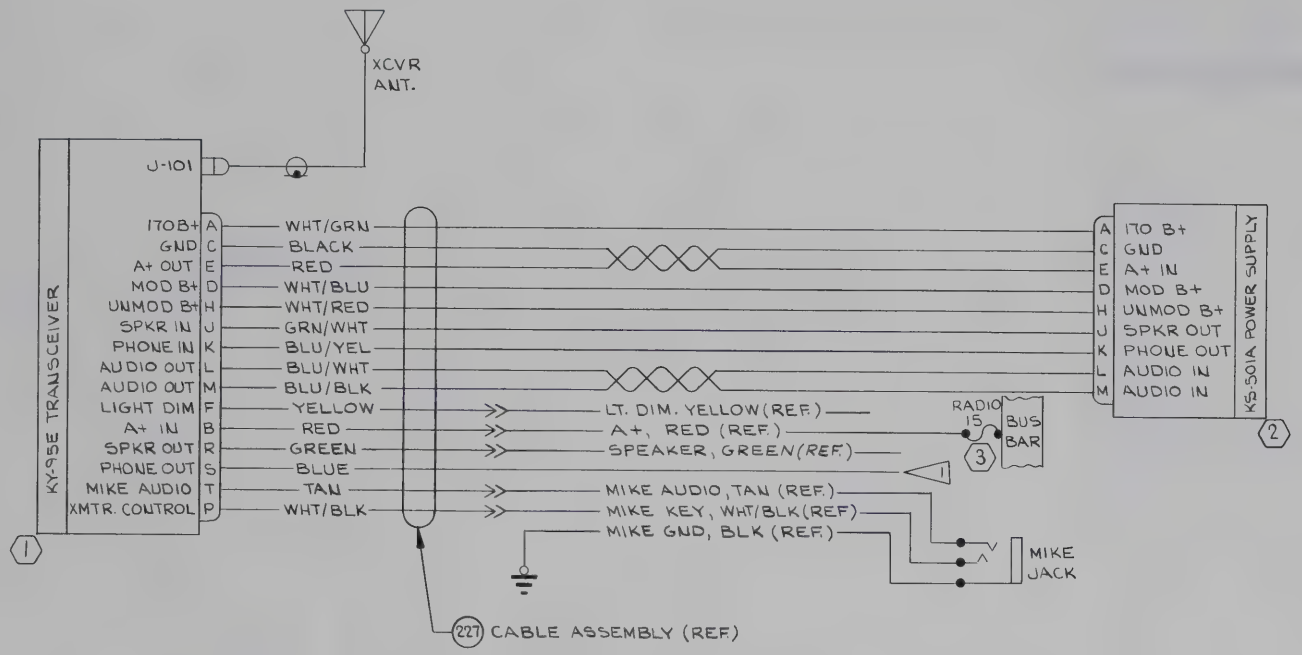

NOTES:

1. END OF WIRE SHALL BE SLEEVED & TIED INTO CABLE UNTIL USED.
2. WIRE MATERIAL PER S-1460

WIRE CODE NO.	GA	MATERIAL	LG	TERMINALS		SERIALS
WHT/GRN	22	-22-9-5		SOLDER	SOLDER	
BLACK	16	-16-0				
RED	16	-16-2				
WHT/BLU	22	-22-9-6				
WHT/RED	22	-22-9-2				
GRN/WHT	20	-20-5-9				
BLU/YEL	22	-22-6-4				
BLU/WHT	22	-22-6-9				
BLU/BLK	22	-22-6-0		SOLDER		
YELLOW	18	-18-4		S-341-2		
RED	16	-16-2		S-341-2		
GREEN	20	-20-5		S-341-2	SOLDER	
BLUE	22	-22-6		SOLDER	1	
TAN	22	-22-10		S-341-2	SOLDER	
WHT/BLK	22	-22-9-0		S-341-2	SOLDER	

2 WIRE TABLE

ITEM NO	PART NO.	DESCRIPTION	INSTALLED ON
3	S-1091-15	FUSE	
2	KS-501A	PWR. SUPPLY (KG)	
1	KY-95E	XCVR (KG)	

EQUIPMENT TABLE

CESSNA AIRCRAFT CO., COMMERCIAL AIRCRAFT DIVISION, WICHITA, KANSAS

	NAME	DATE
DRAWN	BLISS	5-6-66
GROUP	R Wirl	5-6-66
CHECK	R Stuck	5-9-66
PROJ	M Mottl	5-10-66

TITLE: WIRING DIAGRAM— KING KY-95E

Cessna

DWG NO: 0470400

SUPERSEDED BY:

SUPERSEDES: 0470400 PAGE 2.1.1

MODEL: 150

REV:

PAGE: 2.1.2

FORM NO 80-161A

CHG LET	REVISION	BY DATE	CHK APPD

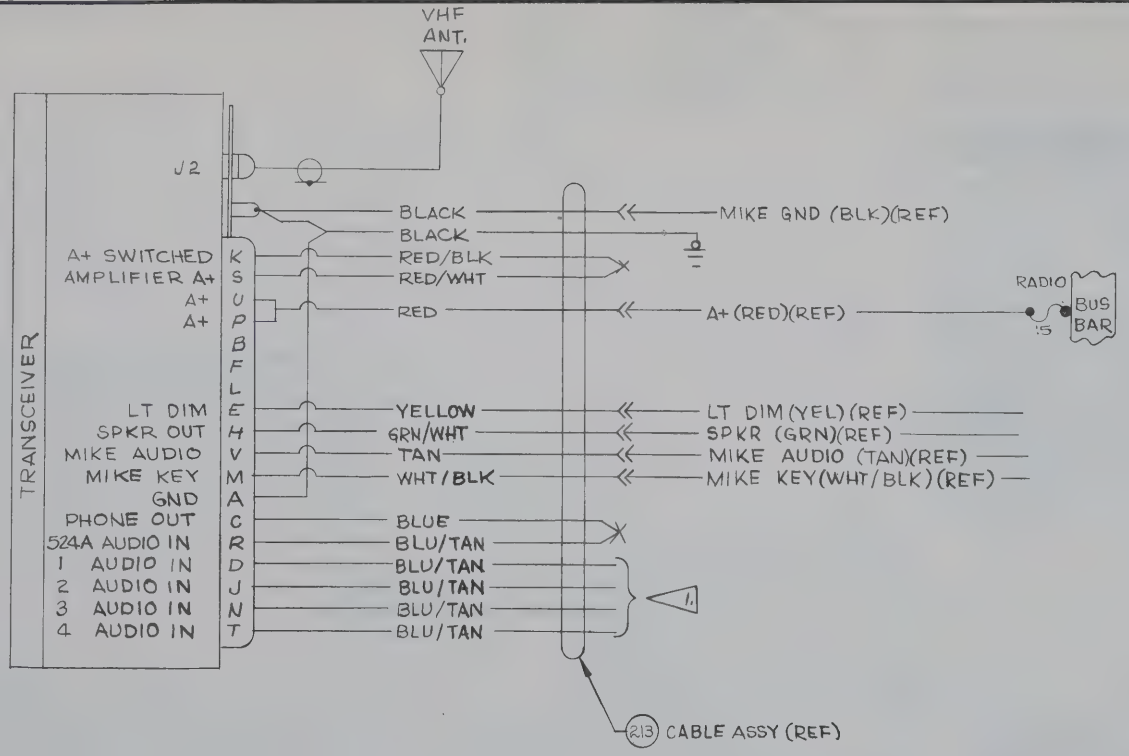

NOTES:
1. WIRES NOT USED SHALL BE SLEEVED AND TIED INTO BUNDLE
2. WIRE MATERIAL PER S-1460

WIRE CODE NO.	GA	MATERIAL	LG	TERMINALS			SERIALS
BLU/TAN	22	-22-6-10		SOLDER			
BLU/TAN	22	-22-6-10					
BLU/TAN	22	-22-6-10					
BLU/TAN	22	-22-6-10					
BLU/TAN	22	-22-6-10			COMMON TO BLUE		
BLUE	22	-22-6			S-1370-1		
BLACK	22	-22-0			S-341-2		
WHT/BLK	22	-22-9-0			S-341-2		
TAN	22	-22-10			S-341-2		
GRN/WHT	20	20-5-9			S-341-2		
YELLOW	18	-18-4			S-341-2		
RED	16	-16-2			S-341-1		
RED/WHT	18	-18-2-9			COMMON TO RED/BLK		
RED/BLK	18	-18-2-0			S-1390-1		
BLACK	16	-16-0		SOLDER	S-1367-210		

2 WIRE TABLE

CESSNA AIRCRAFT CO., COMMERCIAL AIRCRAFT DIVISION, WICHITA, KANSAS

	NAME	DATE
DRAWN	COOK	7-9-64
GROUP	PARSONS	8-13-64
CHECK	R. Stuck	8-11-64
PROJ	H. Wise	8-11-64

TITLE: WIRING DIAGRAM — CESSNA COMM 300 (ARC TYPE 524 A)

Cessna.

DWG NO. 0470400

SUPERSEDED BY	SUPERSEDES	MODEL: 150	REV.	PAGE: 2.8.2

ITEM NO	PART NO.	DESCRIPTION	INSTALLED ON
EQUIPMENT TABLE			

(SR4438)

CHG LET	REVISION	BY DATE	CHK APPD
A	ADD NOTE 3 & DETAIL A. ADD 515R TO TITLE (SR4662)	4-16-65	
B	BY REV; ADD E/T (SR4920)	5-14-66	
C	BY REV: ADD 515R-1 & 517R	7-1-66	
D	BY REV: ADD 540A. TO TITLE BLOCK (SR5195)	4/18/67	

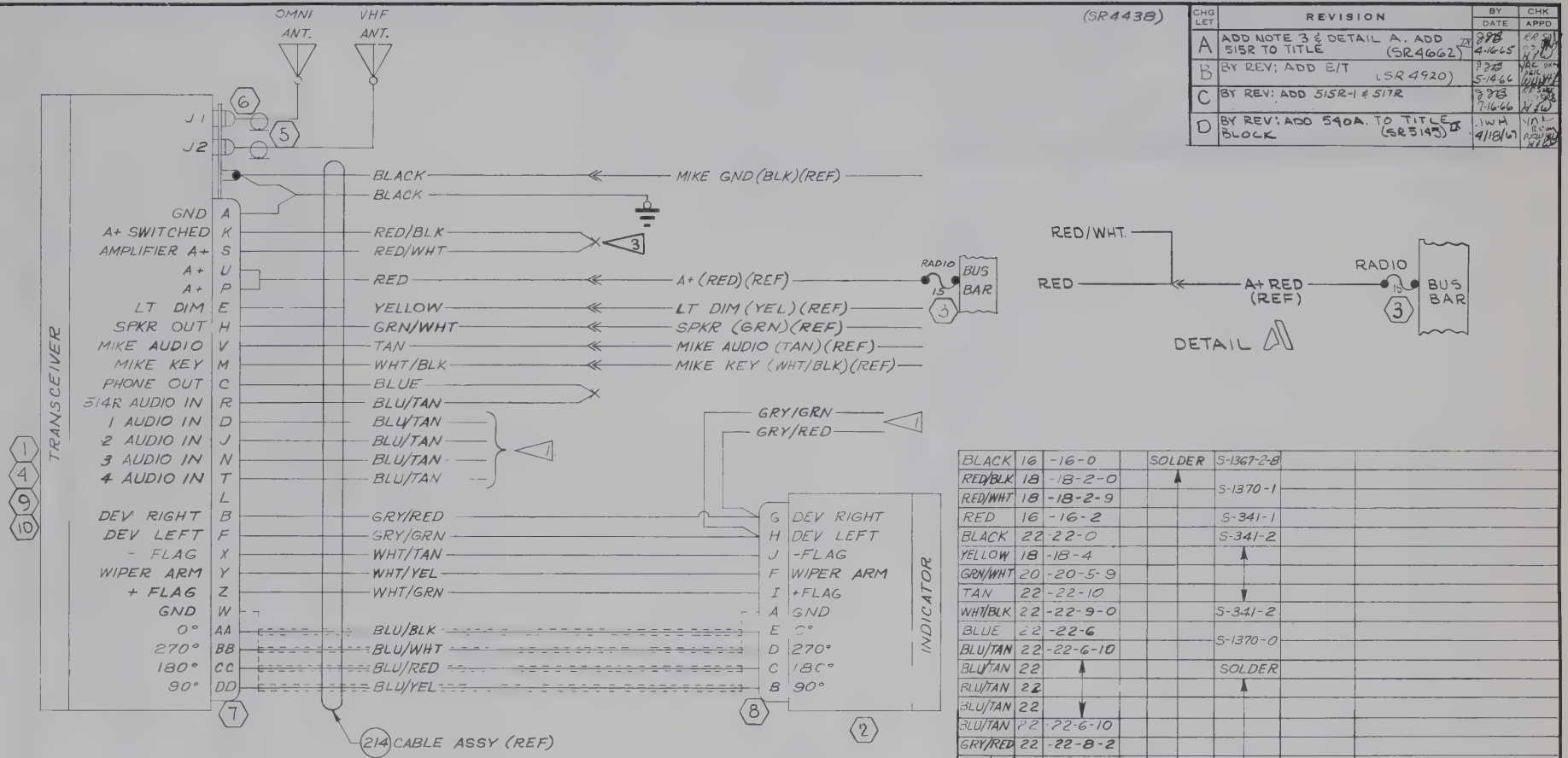

NOTES:
1. WIRES NOT USED SHALL BE SLEEVED AND TIED INTO BUNDLE.
2. WIRE MATERIAL PER S-1460 EXCEPT AS NOTED.
3. WHEN THIS SET IS INSTALLED AS A SINGLE RADIO, CONNECT PINS S & K TOGETHER AS SHOWN. WHEN INSTALLED IN CONJUNCTION WITH ANOTHER RADIO SET AS AN ADF OR A NAV-OMNI, CONNECT PIN S AS SHOWN IN DETAIL "A".

WIRE CODE NO	GA	MATERIAL	LG	TERMINALS		SERIALS
BLACK	16	-16-0		SOLDER	S-1367-2-8	
RED/BLK	18	-18-2-0			S-1370-1	
RED/WHT	18	-18-2-9				
RED	16	-16-2			S-341-1	
BLACK	22	-22-0			S-341-2	
YELLOW	18	-18-4				
GRN/WHT	20	-20-5-9				
TAN	22	-22-10				
WHT/BLK	22	-22-9-0			S-341-2	
BLUE	22	-22-6				
BLU/TAN	22	-22-6-10			S-1370-0	
BLU/TAN	22				SOLDER	
BLU/TAN	22					
BLU/TAN	22					
BLU/TAN	22	-22-6-10				
GRY/RED	22	-22-8-2				
GRY/GRN	22	-22-8-5				
GRY/RED	22	-22-8-2				
GRY/GRN	22	-22-8-5				
WHT/TAN	22	-22-9-10				
WHT/YEL	22	22-9-4				
WHT/GRN	22	-22-9-5				
BLU/BLK	22S	S-1461-22-6-0				
BLU/WHT	22S	S-1461-22-6-9				
BLU/RED	22S	S-1461-22-6-2				
BLU/YEL	22S	S-1461-22-6-4		SOLDER	SOLDER	

2 WIRE TABLE

TEM NO	PART NO	DESCRIPTION	INSTALLED ON
10	37600-1114	XCVR (ARC TYPE 540A)	
9	36120-1014	XCVR (ARC TYPE RT-517R)	
8	32604	CONNECTOR (ARC)	
7	29797-0026	CONNECTOR (ARC)	
6	29732	CONNECTOR (ARC)	
5	29733	CONNECTOR (ARC)	
4	36150-1114	XCVR (ARC TYPE RT-515R-1)	
3	S1091-15	FUSE	
2	31640	INDICATOR (ARC TYPE IN-514R)	
1	34640-1114	XCVR (ARC TYPE RT-515R)	

EQUIPMENT TABLE

CESSNA AIRCRAFT CO. COMMERCIAL AIRCRAFT DIVISION, WICHITA, KANSAS

	NAME	DATE
DRAWN	SPRIGGS	3-31-64
GROUP	PARSONS	6-2-64
CHECK	R. Stuck	5-27-64
PROJ	R Rutter	6-2-64

TITLE: WIRING DIAGRAM — CESSNA NAV-COMM 300R (ARC TYPE 514R, 515R, 515R-1, 517R & 540A)

Cessna.

DWG NO. 0470400

SUPERSEDED BY	SUPERSEDES	MODEL	REV	PAGE
		150	D	2.11.1

FORM NO. 80-161

NOTES;

1. WIRES NOT USED SHALL BE CAPPED & TIED INTO BUNDLE.
2. WIRE MATERIAL PER S-1460 EXCEPT AS NOTED.
3. WHEN THIS SET IS INSTALLED AS A SINGLE RADIO CONNECT PINS S & K TOGETHER AS SHOWN. WHEN INSTALLED IN CONJUNCTION WITH ANOTHER RADIO SET AS AN ADF OR A NAV-OMNI, CONNECT PIN S AS SHOWN IN DETAIL "A".

LTR	REVISION	BY / DATE	CHK / APPD
A	BY REV: ADD 540A TO ET; FIELD & TITLE (GR5145)	JWH 4/18/67	VAK

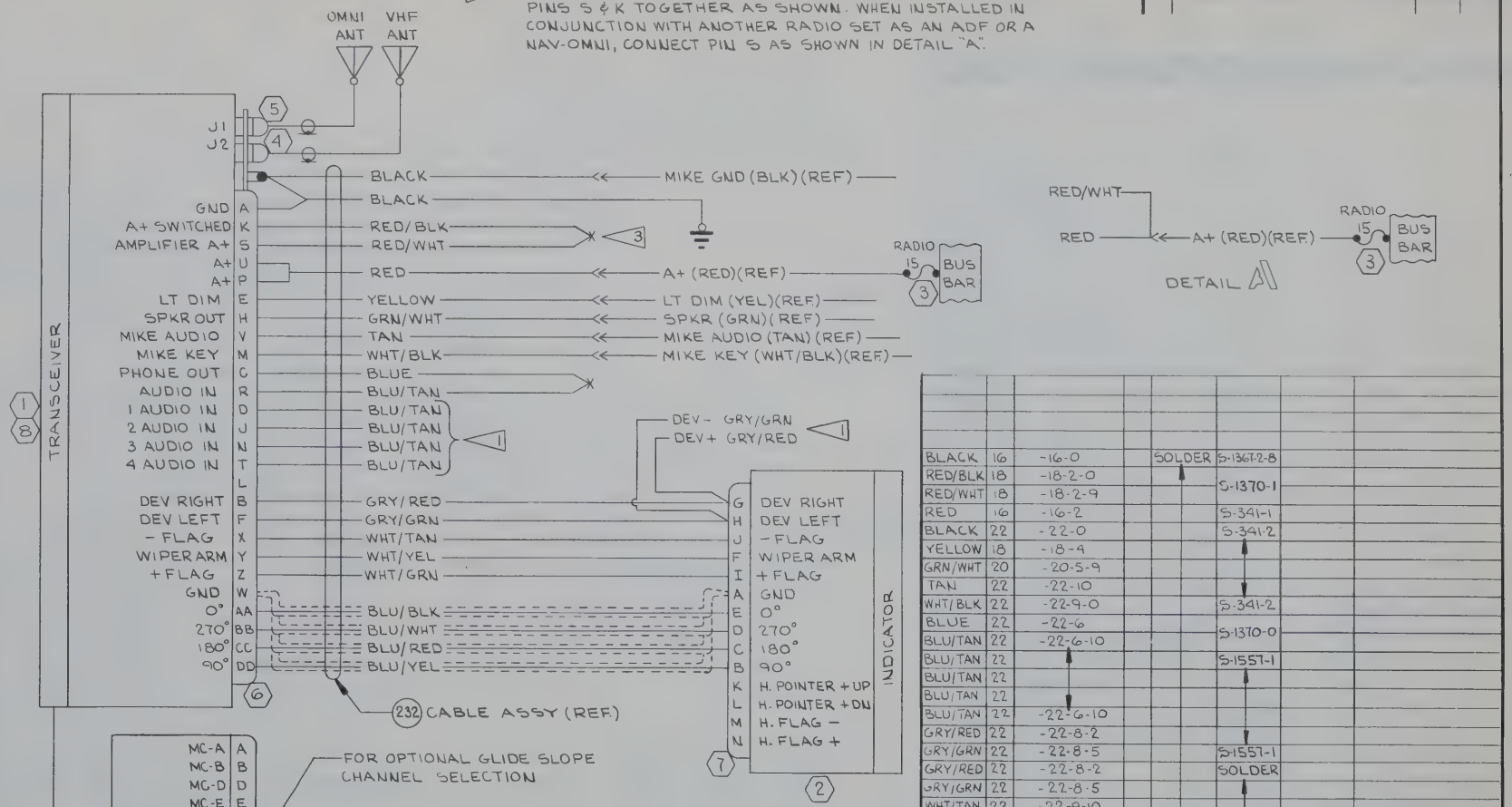

WIRE CODE NO.	GA	MATERIAL	LG	TERMINALS		SERIALS
BLACK	16	-16-0		SOLDER	S-1367-2-8	
RED/BLK	18	-18-2-0			S-1370-1	
RED/WHT	18	-18-2-9				
RED	16	-16-2			S-341-1	
BLACK	22	-22-0			S-341-2	
YELLOW	18	-18-9				
GRN/WHT	20	-20-5-9				
TAN	22	-22-10				
WHT/BLK	22	-22-9-0			S-341-2	
BLUE	22	-22-6				
BLU/TAN	22	-22-6-10			S-1370-0	
BLU/TAN	22				S-1557-1	
BLU/TAN	22					
BLU/TAN	22					
BLU/TAN	22	-22-6-10				
GRY/RED	22	-22-8-2				
GRY/GRN	22	-22-8-5			S-1557-1	
GRY/RED	22	-22-8-2			SOLDER	
GRY/GRN	22	-22-8-5				
WHT/TAN	22	-22-9-10				
WHT/YEL	22	-22-9-4				
WHT/GRN	22	-22-9-5				
BLU/BLK	22S	S-1461-22-6-0				
BLU/WHT	22S	S-1461-22-6-9				
BLU/RED	22S	S-1461-22-6-2				
BLU/YEL	22S	S-1461-22-6-4		SOLDER	SOLDER	

2 WIRE TABLE

ITEM NO	PART NO.	DESCRIPTION	INSTALLED ON
8	37600-1114	XCVR (ARC TYPE 540A)	
7	18397	CONNECTOR (ARC)	
6	29747-0026	CONNECTOR (ARC)	
5	29752	CONNECTOR (ARC)	
4	29753	CONNECTOR (ARC)	
3	S-1091-15	FUSE	
2	32350	INDICATOR (ARC TYPE IN-525A)	
1	36150-1414	XCVR (ARC TYPE RT-515R-1)	

EQUIPMENT TABLE

CESSNA AIRCRAFT CO., COMMERCIAL AIRCRAFT DIVISION, WICHITA, KANSAS

	NAME	DATE
DRAWN	BLISS	7-28-66
GROUP	W. Wise	8-29-66
CHECK	R. Stuck	8-29-66
PROJ	E.L. Worthington	8-30-66
	J.K. Sattler	8-30-66

TITLE: WIRING DIAGRAM — CESSNA NAV-COMM 300R (ARC TYPE 515R-1, 540A)

Cessna

DWG NO: 0470400

SUPERSEDED BY: | SUPERSEDES: | MODEL: 150 | REV: A | PAGE: 2.11.2

FORM NO. 80 1614 F.

CHG LET	REVISION	BY / DATE	CHK / APPD
A	BY REV: ADDED CHOKE ⑦ ADDED TO NOTE 2. ADD 33827 LOOP CABLE	SKH 9-10-65	
B	BY REV: XR6085 WAS 0413126-5	RSV 4/4/67	

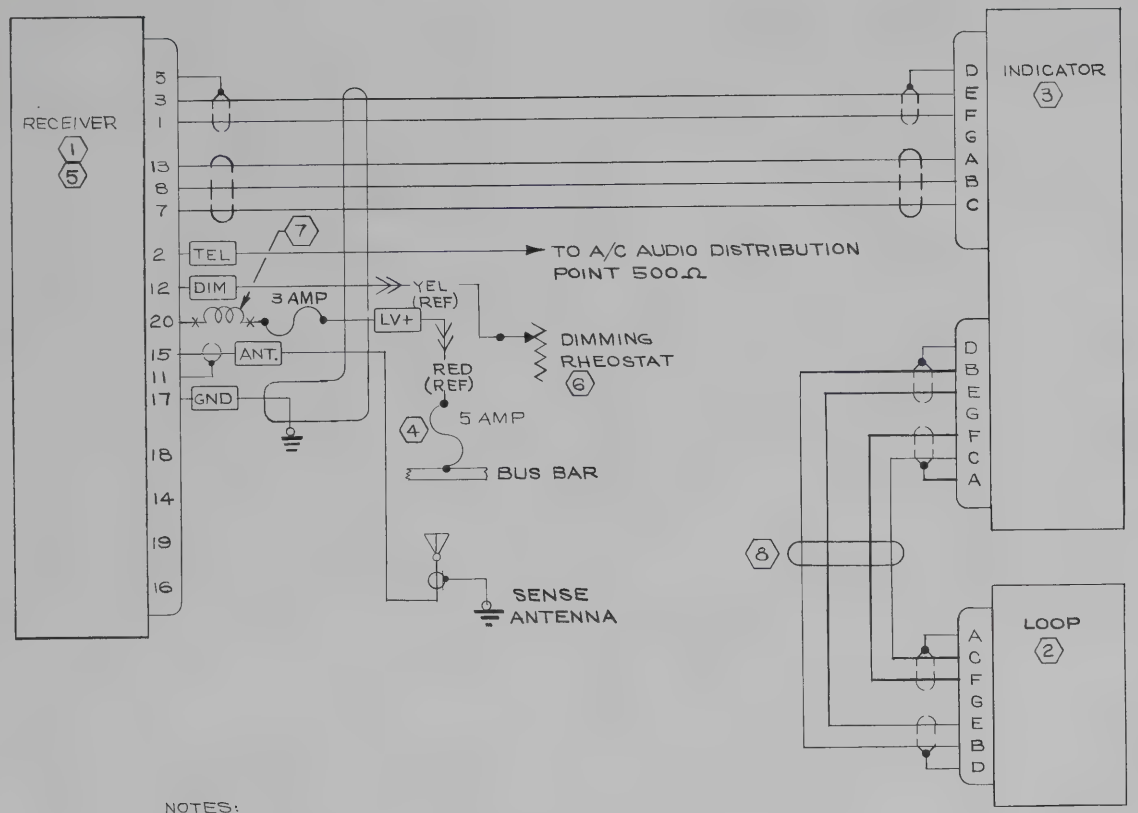

NOTES:

1. CONNECTIONS SHOWN ARE FOR TOP MOUNTED SENSE & BOTTOM MOUNTED LOOP ANTENNA.
2. ALL WIRES ARE VENDOR SUPPLIED WITH RCVR EXCEPT CHOKE IN CIRCUIT BETWEEN PIN 20 & FUSEHOLDER WHICH MUST BE ADDED ON INSTL IN ACFT.

ITEM NO	PART NO.	DESCRIPTION	INSTALLED ON
8	33827	LOOP CABLE (ARC)	
7	A-263	CHOKE (CTAT)	
6	XR6085	RHEOSTAT (94310)	
5	28340-1400	RCVR (WITH BFO)	(ARC R-521A-14)
4	S-1091-5	FUSE	
3	32680-0000	INDICATOR (ARC)	(ARC IN-521B)
2	32880-0100	LOOP (ARC L-521B-10)	
1	28340-1500	RCVR (WITHOUT BFO)	(ARC R-521A-15)

EQUIPMENT TABLE

WIRE CODE NO.	GA	MATERIAL	LG	TERMINALS		SERIALS

WIRE TABLE

CESSNA AIRCRAFT CO., COMMERCIAL AIRCRAFT DIVISION, WICHITA, KANSAS

	NAME	DATE
DRAWN	BREEN	8-5-64
GROUP	H. Wino	4-16-65
CHECK	R. Huck	4-30-65
PROJ	J.R. Sattler	4-30-65

TITLE: WIRING DIAGRAM — CESSNA ADF 300 (ARC TYPE 521B)

Cessna

DWG NO 0470400

SUPERSEDED BY	SUPERSEDES	MODEL:	REV	PAGE
	0470400 PAGE 2.9	150	B	2-12

FORM NO. 80-161

CHG LET	REVISION	BY DATE	CHK APPD
A	IN W/T 1205 3C 12D WAS 1205 ..., IN W/T RED/GRN, GRN/BLU & ... AN 20 GA. WAS 22 GA., XCVR ... XCVR NO.2, PIN "T" WAS "D", CHG ... SKR. WIRE TO FIRST TERMINAL	2-18-66	
B	... 1460-20-5-6 WAS ... (SK-4720)		
C	BY REV; ADD DETAIL A & SER, S1697-1; SOLDER WAS S-1367-1-6 & -8 SR5437) IX	JDH 4-10-68	
D	BY REV: ADD DETAIL B & SER OUT 0770731-1; ADD BLK(2); GREEN WAS GREEN (REF) ED & RR 02478 (SR 5437) IX	SEM 6-7-68	

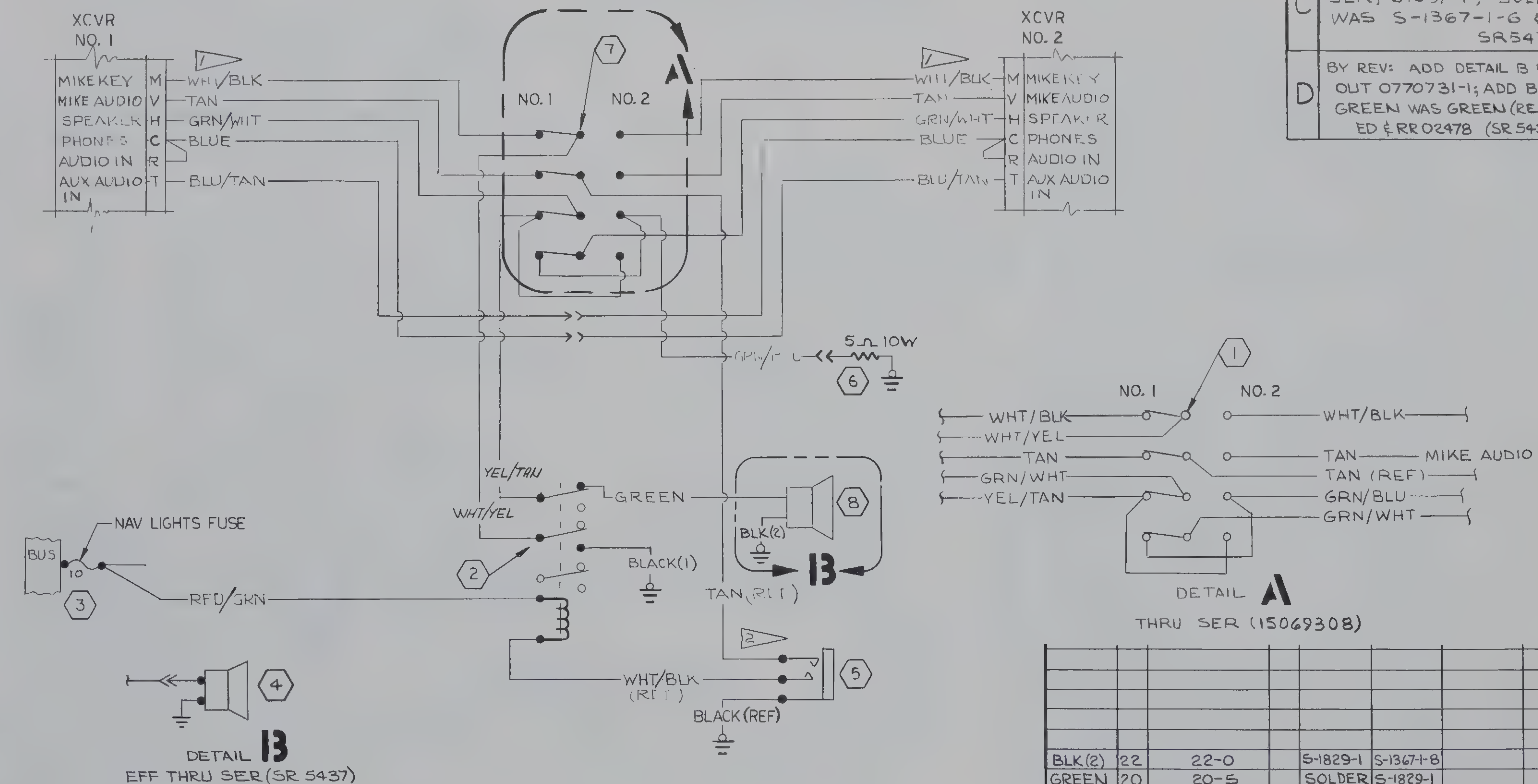

NOTES:

1. COLOR CODES SHOWN ARE APPLICABLE TO CESSNA 300 SERIES TRANSCEIVER AND ARE PART OF THE TRANSCEIVER CABLE ASSY. THESE WIRES ARE TO BE CONNECTED DIRECTLY TO THE SWITCH WHERE APPLICABLE.
2. WIRES FROM MIKE JACK ARE TO BE CONNECTED DIRECTLY TO THE RELAY AND SWITCH AS SHOWN WITHOUT USE OF SPLICES

ITEM NO	PART NO.	DESCRIPTION	INSTALLED ON
8	C596505-0101	SPEAKER	
7	S-1697-1	SWITCH	
6	5Ω 10W	RESISTOR (44655)	
5	S-1102-1	MIKE JACK	
4	0770715-2	SPEAKER	
3	S-1001-10	FUSE	
2	1205-3C-12D	RELAY (73949)	
1	1L254-73	SWITCH (73559)	

EQUIPMENT TABLE

WIRE CODE NO.	GA	MATERIAL	LG	TERMINALS		SERIALS
BLK(2)	22	22-0		S-1829-1	S-1367-1-8	
GREEN	20	20-5		SOLDER	S-1829-1	
RED/GRN	20	20-2-5		SOLDER	SOLDER	
GRN/BLU	20	20-5-6		S 341-2	SOLDER	
BLK(1)	22	22-0		SOLDER	S-1367-1-8	
YEL/TAN	20	22-4-10		SOLDER	SOLDER	
WHT/[illegible]	22	22-9-4		SOLDER	SOLDER	

WIRE TABLE

CESSNA AIRCRAFT CO., COMMERCIAL AIRCRAFT DIVISION, WICHITA, KANSAS

	NAME	DATE
DRAWN	ACKLESON	4-16-65
GROUP	H Wise	4-27-65
CHECK	R. [illegible]	4-28-65
PROJ	[illegible]	4-29-65

TITLE: WIRING DIAGRAM— TRANSMITTER SELECTOR SWITCH AND MUTING RELAY

Cessna®

DWG NO: 0470400

SUPERSEDED BY: | SUPERSEDES: | MODEL: 150 | REV: D | PAGE: 2.16

FORM NO 80 161A

SER 15061533 & ON

CHG LET	REVISION	BY / DATE	CHK / PPD
A	BY REV; TERMINAL IDENTIFICATION ON 28371-0009 PLUG WAS "B", "H", "A", "D", "E", "C", "F", "J".	8-9-65	KRS
B	BY REV: ADD -220 & -231 ; INACTIVATE DWG ED&RR 10382	DLB 2-7-69	JWH MDS

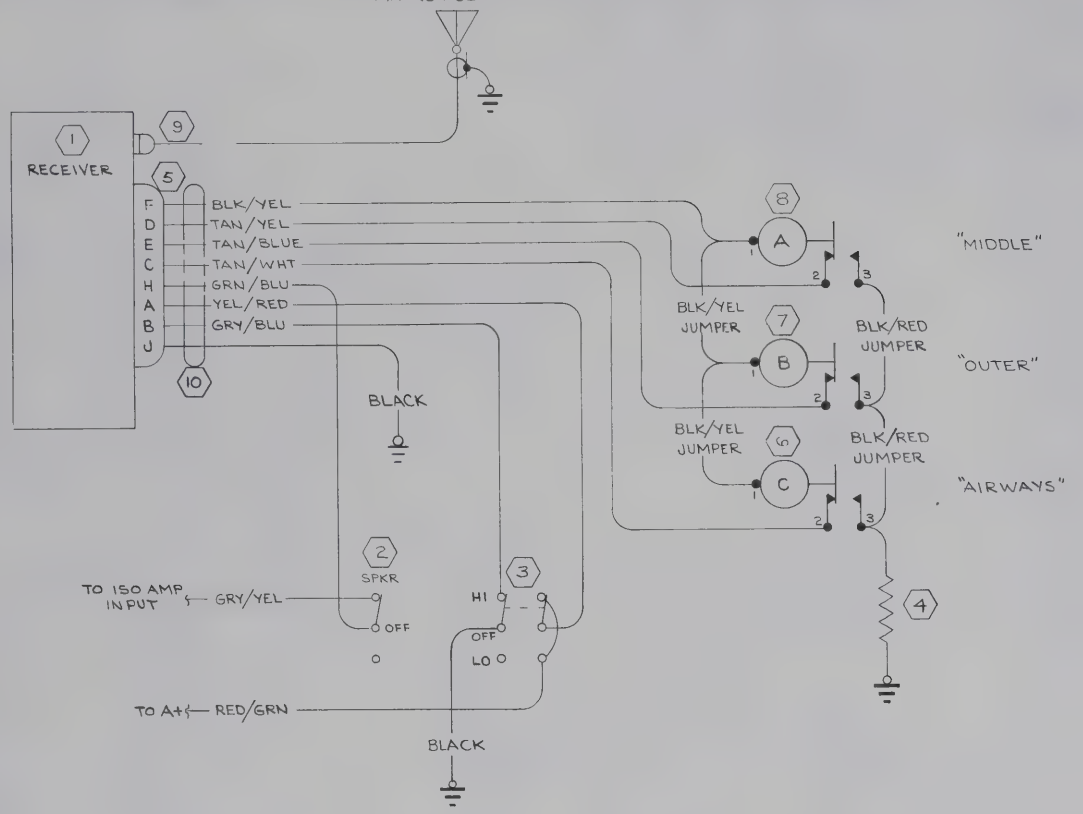

INACTIVE:
EFF SER 15061533
THRU SER 15069308 & F150-0389
ED&RR 10382
DLB 2-7-69
JWH

NOTES:
1. WIRE MATERIAL PER S-1460.

WIRE CODE NO.	GA	MATERIAL	LG	TERMINALS			SERIALS
BLACK	22	-22-0		SOLDER	S-1367-1-8		
BLACK	22	-22-0		S-1367-1-6	S-1367-1-8		
RED/GRN	20	-20-2-5		S-1367-1-6			
GRY/YEL	22	-22-8-4		S-1367-1-6			
GRY/BLU	22	-22-8-6		SOLDER	S-1367-1-6		
YEL/RED	20	-20-4-2			S-1367-1-6		
GRN/BLU	20	-20-5-6			S-1367-1-6		
TAN/WHT	22	-22-10-9			SOLDER		
TAN/BLU	22	-22-10-6					
TAN/YEL	22	-22-10-4					
BLK/YEL	22	-22-0-4		SOLDER	SOLDER		

1 WIRE TABLE

ITEM NO	PART NO.	DESCRIPTION	INSTALLED ON
10	-231	CABLE ASSY	
9	-220	ANT. CABLE ASSY	
8	MS25041-4-328	LIGHT ASSY	
7	MS25041-10-328	LIGHT ASSY	
6	MS25041-1-328	LIGHT ASSY	
5	28371-0009	PLUG	
4	40Ω, 3 WATT	RESISTOR	
3	S-392-1	SWITCH	
2	S-382-1	SWITCH	
1	31240-0014	MKR BCN RCVR (ARC TYPE R-502B)	

EQUIPMENT TABLE

CESSNA AIRCRAFT CO., COMMERCIAL AIRCRAFT DIVISION, WICHITA, KANSAS

	NAME	DATE
DRAWN	RIDDER	4-19-65
GROUP	H. Wuo	4-23-65
CHECK	R. Stack	4-23-65
PROJ	[illegible]	4-26-65
	[illegible]	4-27-65

TITLE: WIRING DIAGRAM— CESSNA MARKER BEACON 300 (ARC TYPE R-502B)

Cessna®

DWG NO: 0470400

SUPERSEDED BY: 0470400 P 2.20A | SUPERSEDES: | MODEL: 150 | REV: B | PAGE: 2.20.1

FORM NO 80-161A

NOTES;

1. WIRE MATERIAL PER S-1460 UNLESS OTHERWISE NOTED
2. END OF WIRE SHALL BE CAPPED AND TIED INTO CABLE UNTIL USED
3. THIS JUMPER USED ONLY WHEN DUAL INSTALLATIONS ARE REQD WITH CESSNA NAV-O-MATIC SYSTEMS

(SR4662)

CHG LFT	REVISION	BY / DATE	CHK / APPD
A	ADDED 12A TO TITLE; ADDED ITEMS 5,6 & 7 (12A RCVR, 12A PWR UNIT & VOA-5 INDICATOR)	W COOK 1-30-67	YAK
B	BY REV: VOA-9 WAS VOA-5; VOA-8 WAS VOA-4 (ED&RR 00944)(SR5595)	RLY 11-18-67	MDS
C	BY REV: ADD NOTE 3 & JUMPER BETWEEN PINS D & N OF INDICATOR PLUG ED RR 01356	CG 1-11-68	RLL

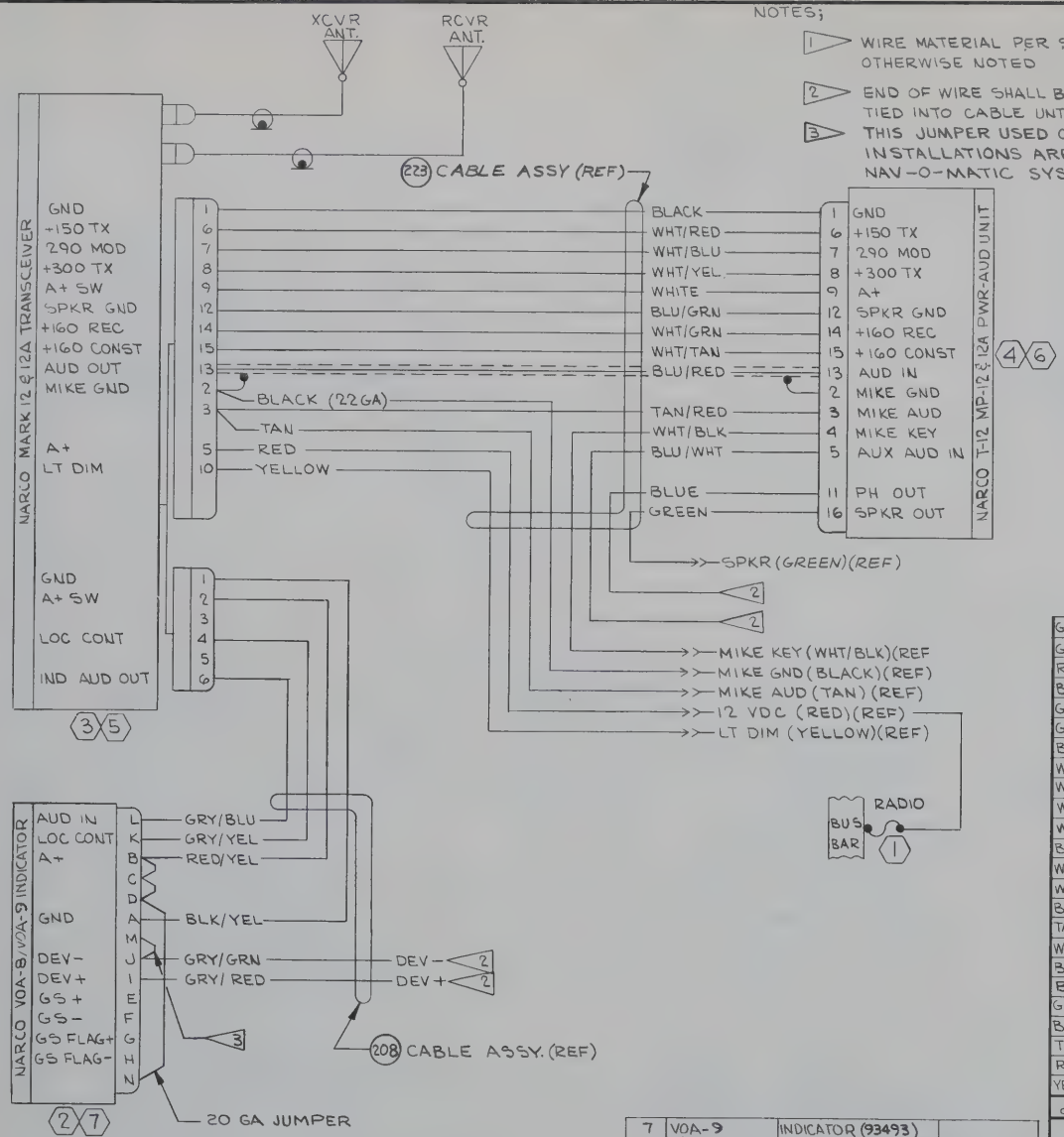

WIRE CODE NO.	GA	MATERIAL	LG	TERMINALS			SERIALS
GRY/BLU	22	-22-8-6	15	SOLDER	SOLDER		
GRY/YEL	22	-22-8-4	15				
RED/YEL	22	-22-2-4	15				
BLK/YEL	22	-22-0-4	15		SOLDER		
GRY/GRN	22	-22-8-5	15		S-1557-1		
GRY/RED	22	-22-8-2	15		S-1557-1		
BLACK	16	-16-0			SOLDER		
WHT/RED	22	-22-9-2					
WHT/BLU	22	-22-9-6					
WHT/YEL	22	-22-9-4					
WHITE	14						
BLU/GRN	22	-22-6-5					
WHT/GRN	22	-22-9-5					
WHT/TAN	22	-22-9-10					
BLU/RED	22	S-1461-22-6-2					
TAN/RED	22	-22-10-2			SOLDER		
WHT/BLK	22	-22-9-0			S-341-2		
BLU/WHT	22	-22-6-9			S-1557-1		
BLUE	22	-22-6			S-1557-1		
GREEN	20	-20-5			S-341-2		
BLACK	22	-22-0			S-341-2		
TAN	22	-22-10			S-341-2		
RED	16	-16-2			S-341-1		
YELLOW	18	-18-4		SOLDER	S-341-2		

1 WIRE TABLE

ITEM NO	PART NO.	DESCRIPTION	INSTALLED ON
7	VOA-9	INDICATOR (93493)	
6	T-12 MP-12A	POWER SUPPLY (93493)	
5	MARK 12A	XCVR (93493)	
4	T-12 MP-12	PWR SUPPLY (93493)	
3	MARK 12	XCVR (93493)	
2	VOA-8	INDICATOR (93493)	
1	S-1091-10	FUSE	

EQUIPMENT TABLE

CESSNA AIRCRAFT CO., COMMERCIAL AIRCRAFT DIVISION, WICHITA, KANSAS

	NAME	DATE
DRAWN	BLISS	4-28-65
GROUP	H. Wise	5-4-65
CHECK	R. Strick	5-5-65
PROJ	DK McCosh	5-5-65
	[illegible]	5-6-65

TITLE: WIRING DIAGRAM— NARCO MARK 12 & 12A

Cessna®

DWG NO: 0470400

SUPERSEDED BY:

SUPERSEDES: 0470400 P 2.7.2

MODEL: 150

REV. C

PAGE: 2.21.1

FORM NO 80 161A

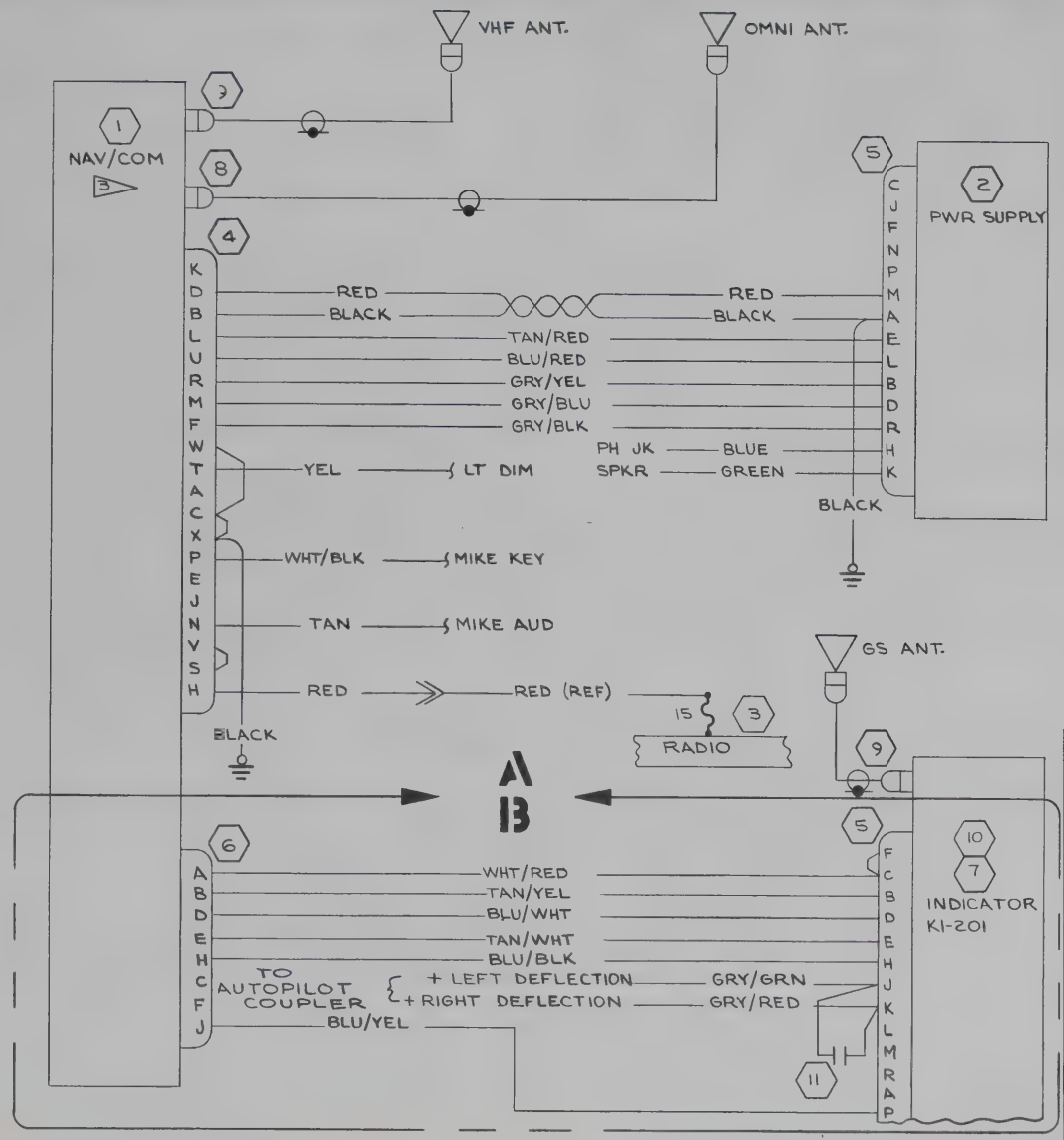

REVISION			
LET	DESCRIPTION	DATE	APPD
	SEE PAGE 2.22.1 FOR REVISION		

WIRE CODE NO.	GA	MATERIAL	LG	TERMINALS		SERIALS

WIRE TABLE

ITEM NO.	PART NO.	DESCRIPTION

EQUIPMENT TABLE

CES-1000 IS APPLICABLE
VENDOR CODES PER S-1400
CES-XXXX=CESSNA SPEC. NO.
S-XXX OR CMXXXX=CESSNA
STD. NO.

SUPERSEDES: P2.22.1 REV A

SUPERSEDED BY:

CONTRACT NO:

	NAME	DATE
DESIGN		
GROUP	H. Wiw	1-11-68
DRAWN	RIDDER	1-2-68
CHECK	LAURIE	1-3-68
STRESS	RW	1-8-68
PROJECT	D.G. Kolla	1-12-68
APPD	MARTEN	1-9-68

Cessna AIRCRAFT CO.
COMMERCIAL AIRCRAFT DIV.
5800 E. PAWNEE
WICHITA, KANSAS

TITLE
WIRING DIAGRAM —
KING KX-160E
NAV/COM

SIZE	CODE IDENT. NO.	DWG NO.
C	71379	0470400

SCALE: NONE

PAGE: 2.22.2

FORM NO. 60-215A

REVISION			
LET	DESCRIPTION	DATE	APPD
	SEE PAGE 2.22.1 FOR REVISION		

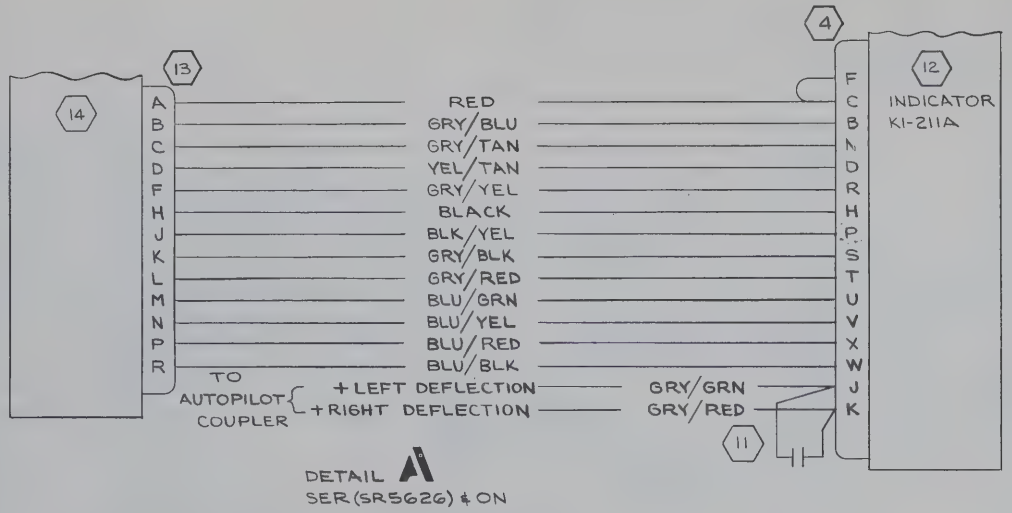

DETAIL A
SER (SR5626) & ON

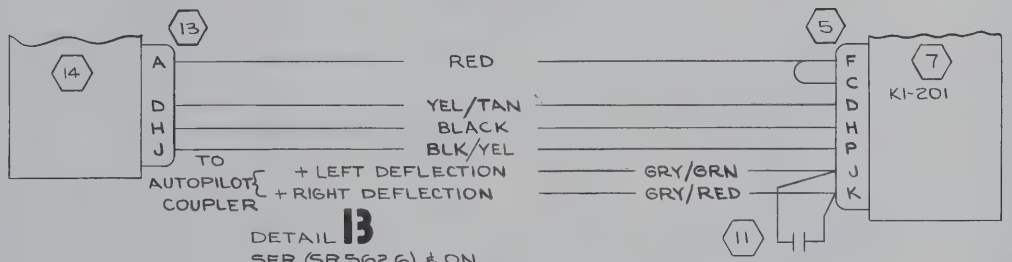

DETAIL B
SER (SR5626) & ON

WIRE CODE NO.	GA	MATERIAL	LG	TERMINALS		SERIALS

WIRE TABLE

ITEM NO.	PART NO.	DESCRIPTION

EQUIPMENT TABLE

CES-1000 IS APPLICABLE VENDOR CODES PER S-1400
CES-XXXX=CESSNA SPEC. NO.
S-XXX OR CMXXXX=CESSNA STD. NO.

SUPERSEDES:

SUPERSEDED BY:

CONTRACT NO:	NAME	DATE
DESIGN		
GROUP	H. Wind	1-11-68
DRAWN	YOUNGERS	1-2-68
CHECK	LAURIE	1-3-68
STRESS	RTW	1-8-68
PROJECT	DG Kollen	1-12-68
APPD	MARTEN	1-4-68

Cessna AIRCRAFT CO.
COMMERCIAL AIRCRAFT DIV.
5800 E. PAWNEE
WICHITA, KANSAS

TITLE
WIRING DIAGRAM —
KING KX-160E
NAV/COM

SIZE	CODE IDENT. NO.	DWG NO.
C	71379	0470400

SCALE: NONE

PAGE: 2.22.3

FORM NO. 80-215A

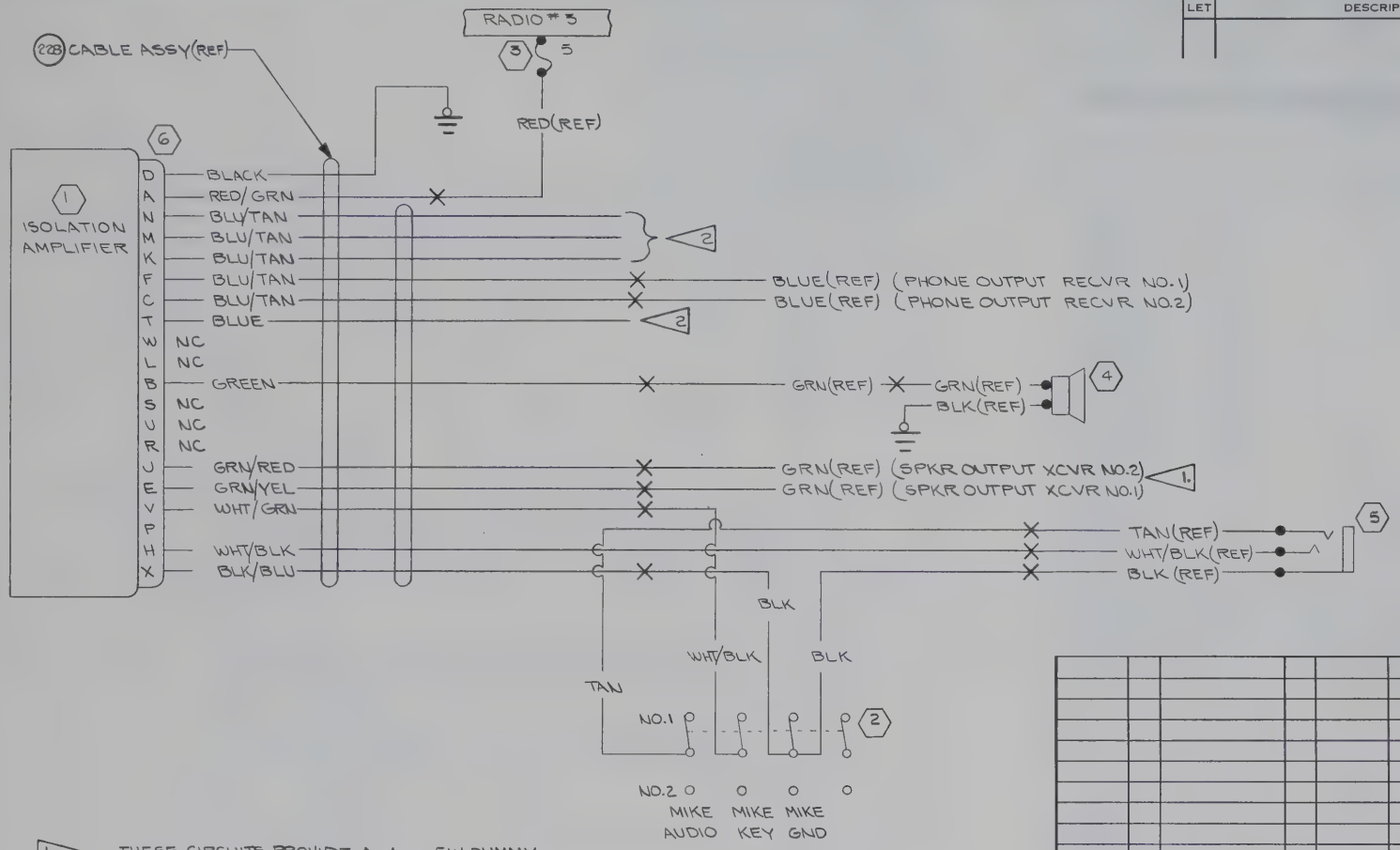

1. THESE CIRCUITS PROVIDE A 4Ω, 5W DUMMY SPKR LOAD WHEN REQD BY THE RADIO INSTL
2. WIRES NOT USED SHALL BE CAPPED AND TIED INTO BUNDLE

REVISION			
LET	DESCRIPTION	DATE	APPD

WIRE CODE NO.	GA	MATERIAL	LG	TERMINALS		SERIALS

WIRE TABLE

ITEM NO.	PART NO.	DESCRIPTION

EQUIPMENT TABLE

CES-1000 IS APPLICABLE VENDOR CODES PER S-1400
CES-XXXX=CESSNA SPEC. NO.
S-XXX OR CMXXXX=CESSNA STD. NO.

SUPERSEDES: 0470400 PAGE 2.24.1

SUPERSEDED BY:

CONTRACT NO:

	NAME	DATE
DESIGN	V R SIPES	7/22/68
GROUP	H. Wise	9-18-68
DRAWN	F. RUNNER	9-12-68
CHECK	RCAxtell	9-16-68
STRESS	[illegible]	9-17-68
PROJECT	[illegible]	9-18-68
APPD	SWANEY	9-16-68

Cessna AIRCRAFT CO.
COMMERCIAL AIRCRAFT DIV.
5800 E. PAWNEE
WICHITA, KANSAS

TITLE
WIRING DIAGRAM —
KING KA-25C
ISOLATION AMPLIFIER

SIZE	CODE IDENT. NO.	DWG NO.
C	71379	0470400

SCALE: NONE | 150 | PAGE: 2.24.3

FORM NO. 60-215A

6ER (SR 5437) & ON ED & RR 10021

CHG LET	REVISION	BY / DATE	CHK / APPD
A	BY REV: VOA-9 WAS VOA-5 & TITLE WAS "NARCO UGR-2 GLIDESCOPE WITH NARCO MARK 12A & VOA-5 (ED&RR00944)(SR5595)	RLY 11-18-67	MDS DCK HW

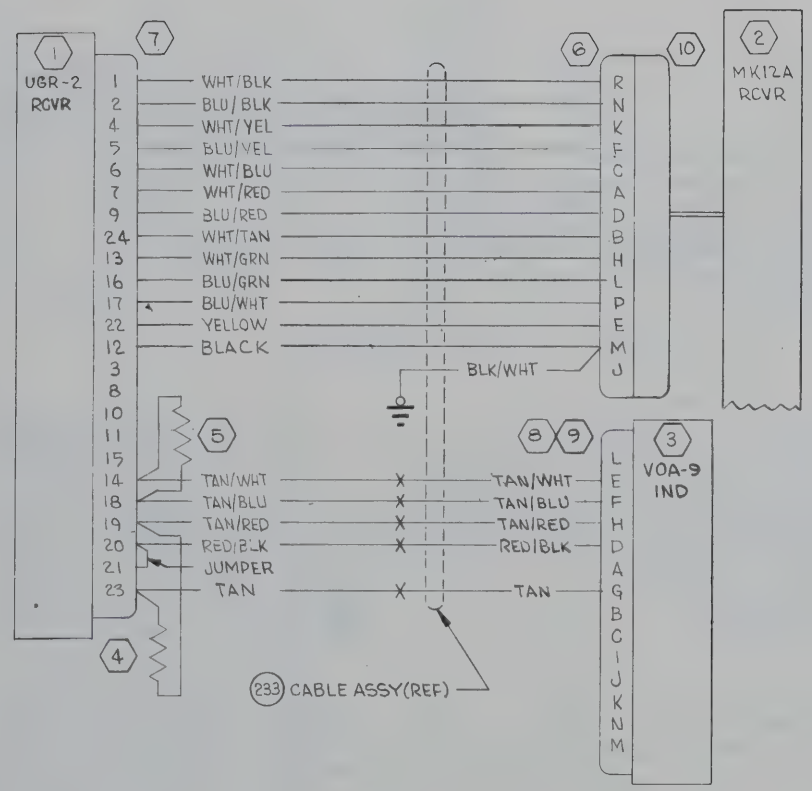

WIRE CODE NO.	GA	MATERIAL	LG	TERMINALS			SERIALS
TAN/WHT	18	-22-10-9		SOLDER	S-1370-1		
TAN/BLU	18	-22-10-6					
TAN/RED	18	-22-10-2					
RED/BLK	18	-18-2-0					
TAN	18	-22-10			S-1370-1		
BLK/WHT	18	18-0-9			S 1367-1-6		
BLACK	18	-18-0			S-1370-1		
YELLOW	18	-18-4			SOLDER		
RED/BLK	18	-18-2-0					
TAN/RED	22	-22-10-2					
TAN/BLU	22	-22-10-6					
TAN/WHT	22	-22-10-9					
BLU/WHT	22	-22-6-9					
BLU/GRN	22	-22-6-5					
BLU/RED	22	-22-6-2					
BLU/YEL	22	-22-6-4					
BLU/BLK	22	-22-6-0					
WHT/TAN	22	-22-9-10					
WHT/GRN	22	-22-9-5					
WHT/RED	22	-22-9-2					
WHT/BLU	22	-22-9-6					
WHT/YEL	22	-22-9-4					
WHT/BLK	22	-22-9-0			SOLDER		
TAN	22	-22-10		SOLDER	S-1370-1		

WIRE TABLE

ITEM NO	PART NO.	DESCRIPTION	INSTALLED ON
10	MRA-14S	PIG TAIL(93493)	
9	41228-6	CLAMP(93493)	
8	41223-2	PLUG(93493)	
7	41291-101	CONNECTOR(93493)	
6	41247 102	CONNECTOR(93493)	
5	470Ω, 1/4 WATT	RESISTOR(93493)	
4	1000Ω, 1/4 WATT	RESISTOR(93493)	
3	VOA-9	INDICATOR(93493)	
2	MARK 12A	XCVR(93493)	
1	UGR-2	RCVR(93493)	

EQUIPMENT TABLE

CESSNA AIRCRAFT CO., COMMERCIAL AIRCRAFT DIVISION, WICHITA, KANSAS

	NAME	DATE
DRAWN	W COOK	1-27-67
GROUP	H. Wise	3-7-67
CHECK	YAKSHAW	3-8-67
PROJ	H Sallee	3-13-67
STRESS	[illegible]	[illegible]

TITLE: WIRING DIAGRAM — NARCO UGR-2 GLIDESLOPE WITH NARCO MARK 12A & VOA-9

Cessna.

DWG NO 0470400

SUPERSEDED BY | SUPERSEDES | MODEL 150 | REV A | PAGE 2.25.1

FORM NO. 80-161

CHG LET	REVISION	BY DATE	CHK APPD
A	BY REV: R-543B WAS R-543A & TITLE WAS WIRING DIAGRAM—CESSNA GLIDESLOPE (ARC TYPE R-543A); 36440-0000 WAS 34340-0000 (ED&RR 00952) (SR5632)	RLY 12-7-67	MDS DGK

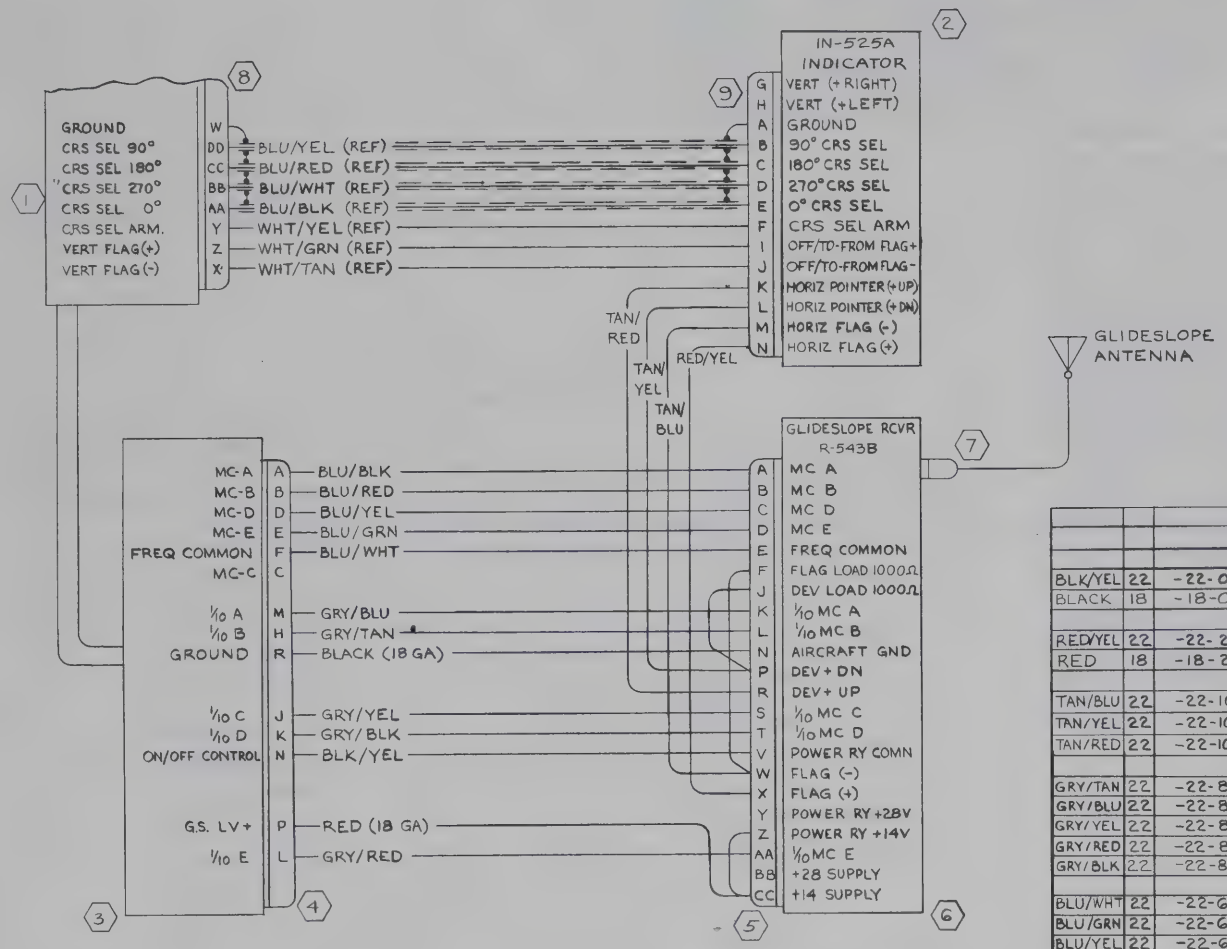

WIRE CODE NO.	GA	MATERIAL	LG	TERMINALS		SERIALS
BLK/YEL	22	-22-0-4		SOLDER	SOLDER	
BLACK	18	-18-0		SOLDER	SOLDER	
RED/YEL	22	-22-2-4		SOLDER	SOLDER	
RED	18	-18-2				
TAN/BLU	22	-22-10-6				
TAN/YEL	22	-22-10-4				
TAN/RED	22	-22-10-2				
GRY/TAN	22	-22-8-10				
GRY/BLU	22	-22-8-6				
GRY/YEL	22	-22-8-4				
GRY/RED	22	-22-8-2				
GRY/BLK	22	-22-8-0				
BLU/WHT	22	-22-6-9				
BLU/GRN	22	-22-6-5				
BLU/YEL	22	-22-6-4				
BLU/RED	22	-22-6-2				
BLU/BLK	22	-22-6-0		SOLDER	SOLDER	

WIRE TABLE

ITEM NO	PART NO.	DESCRIPTION	INSTALLED ON
9	27826	CONNECTOR	
8	29747-0026	CONNECTOR	
7	11337	CONNECTOR	
6	36440-0000	GLIDESLOPE RCVR	
5	36194	CONNECTOR. KIT	
4	36195	CONNECTOR KIT	
3	36300	CABLE HARNESS KIT	
2	32350	INDICATOR (ARC TYPE IN-525A)	
1	36150-1114	RCVR-XMTR (ARC TYPE RT515R-1)	

EQUIPMENT TABLE

CESSNA AIRCRAFT CO., COMMERCIAL AIRCRAFT DIVISION, WICHITA KANSAS

	NAME	DATE
DRAWN	G. WOOD	11-10-66
GROUP	N. Wiel	1-31-67
CHECK	VAKSHAW	2-1-67
PROJ	H. Bell	2-3-67

TITLE: WIRING DIAGRAM— CESSNA 400 GLIDESLOPE (ARC TYPE R-543B)

Cessna.

DWG NO: 0470400

SUPERSEDED BY: | SUPERSEDES: | MODEL: 150 | REV: A | PAGE: 2.26.1

FORM NO. 60-161A

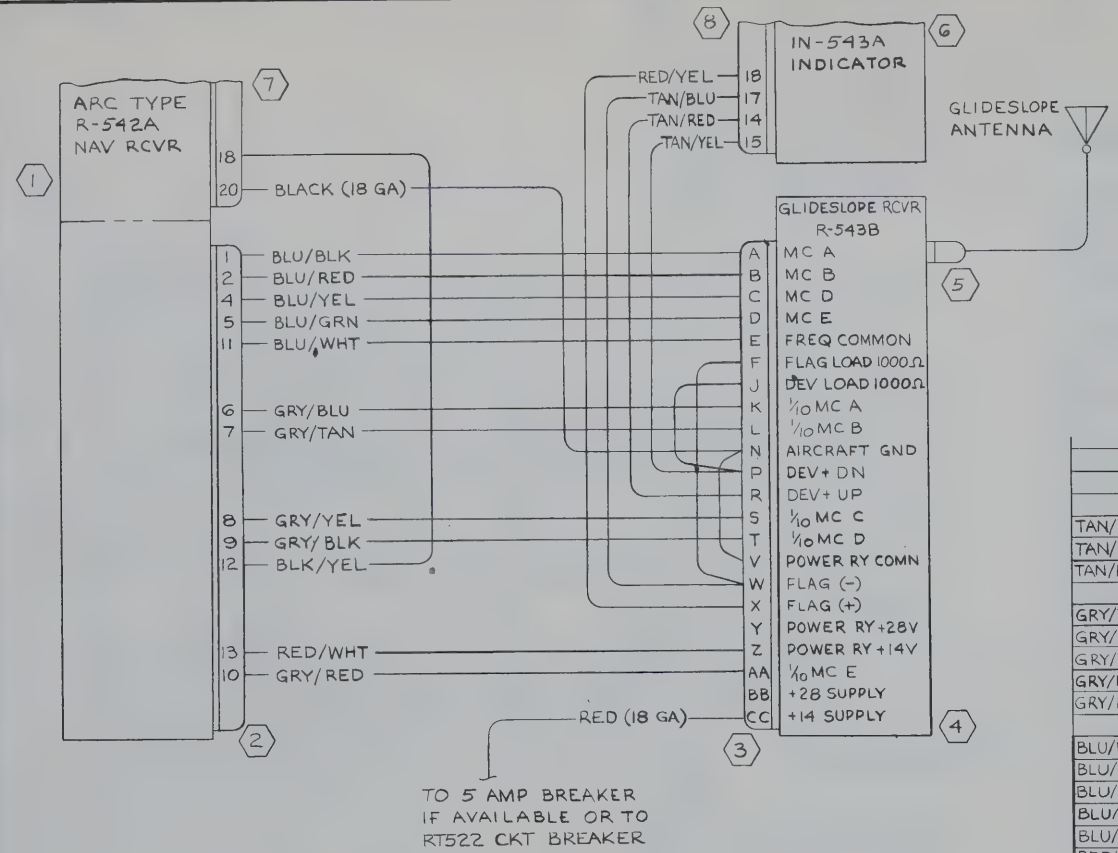

REVISIONS			
LTR	DESCRIPTION	DATE	APPROVED
A	BY REV: TITLE WAS WIRING DIAGRAM-"CESSNA GLIDESLOPE" (ARC TYPE R-543A); R-543B WAS R-543A IN FIELD; 36440-0000 WAS 34340 (ED & RR 00952) (SR5632)	RLY 12-7-67	MDS

WIRE CODE NO.	GA	MATERIAL	LG	TERMINALS			SERIALS
TAN/BLU	22	-22-10-6		SOLDER	SOLDER		
TAN/YEL	22	-22-10-4		SOLDER	SOLDER		
TAN/RED	22	-22-10-2		SOLDER	SOLDER		
GRY/TAN	22	-22-8-10		SOLDER	SOLDER		
GRY/BLU	22	-22-8-6					
GRY/YEL	22	-22-8-4					
GRY/RED	22	-22-8-2					
GRY/BLK	22	-22-8-0		SOLDER	SOLDER		
BLU/WHT	22	-22-6-9		SOLDER	SOLDER		
BLU/GRN	22	-22-6-5					
BLU/YEL	22	-22-6-4					
BLU/RED	22	-22-6-2					
BLU/BLK	22	-22-6-0					
RED/YEL	22	-22-2-4					
RED/WHT	22	-22-2-9		SOLDER			
RED	18	-18-2		S-1367-1-8	SOLDER		
BLK/YEL	22	-22-0-4		SOLDER	SOLDER		
BLACK	18	-18-0		SOLDER	SOLDER		

WIRE TABLE

ITEM NO	PART NO.	DESCRIPTION
8	34294-0425	CONNECTOR
7	35693-0004	CONNECTOR
6	34290	INDICATOR (ARC TYPE IN-543)
5	11337	CONNECTOR
4	36440-0000	G/S RCVR (ARC TYPE R-543B)
3	36194	CONNECTOR KIT
2	35548-0225	CONNECTOR
1	33560	NAV RCVR (ARC TYPE R-542)

EQUIPMENT TABLE

CONTRACT NO:

	NAME	DATE
DESIGN	G WOOD	1-9-67
GROUP	H. Wise	1-31-67
DRAWN	G WOOD	1-9-67
CHECK	YAKSHAW	2-1-67
STRESS	[illegible]	2-1-67
PROJECT	[illegible]	2-3-67
APPD		

Cessna AIRCRAFT CO.
COMMERCIAL AIRCRAFT DIV.
5800 E. PAWNEE
WICHITA, KANSAS

TITLE
WIRING DIAGRAM — CESSNA 400 GLIDESLOPE (ARC TYPE R-543B)

SIZE C | CODE IDENT. NO. 71379 | DWG NO. 0470400

SCALE: NONE | PAGE: 2.27.1

F

FORM NO 80-215

REVISIONS			
LTR	DESCRIPTION	DATE	APPROVED
A	BY REV: ADD DETAIL A AND SER OUT 0770731-2, ADD BLK(3) ED & RR 02478 (SR 5437) IX	SEM 6-7-68	GEI MDS K-W HLW DGK

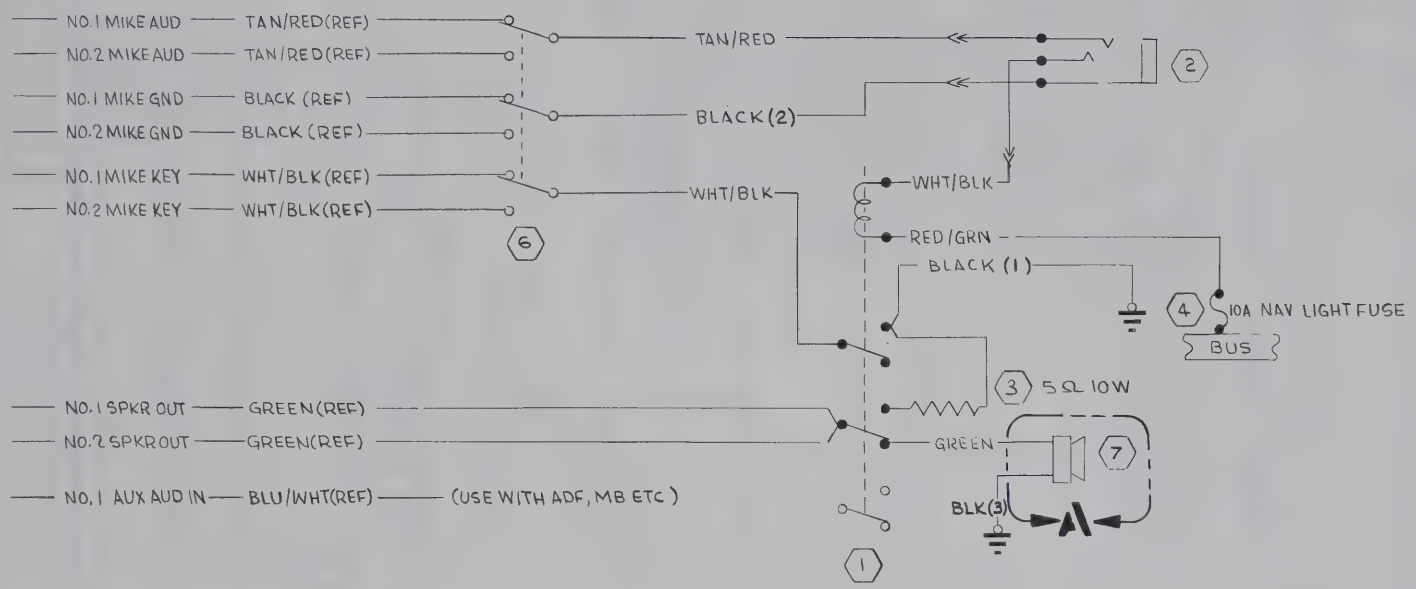

DETAIL A
EFF THRU SER(15069308)

WIRE CODE NO.	GA	MATERIAL	LG	TERMINALS			SERIALS
BLK(3)	22	-22-0		S-1829-1	SOLDER		
TAN/RED	22	-22-10-2		S-341-2	S-1367-1-6		
BLK(2)	22	-22-0		S-341-2	S-1367-1-6		
WHT/BLK	22	-22-9-0		SOLDER	S-1367-1-6		
WHT/BLK	22	-22-9-0		SOLDER	S-341-2		
RED/GRN	20	-20-2-5		SOLDER	SOLDER		
BLK(1)	22	-22-0		SOLDER	S-1367-1-8		
GREEN	20	-20-5		SOLDER	S-1829-1		

WIRE TABLE

ITEM NO.	PART NO.	DESCRIPTION
7	C596505-0101	SPEAKER
6	1L254-73	SWITCH (73559)
5	0770731-2	SPEAKER
4	S-1091-10	FUSE
3	5Ω, 10 WATT	RESISTOR (44655)
2	S-1102-1	MIKE JACK
1	1205-3C-12D	RELAY (73949)

EQUIPMENT TABLE

CONTRACT NO:

	NAME	DATE
DESIGN	W COOK	3-7-67
GROUP	H. Wise	3-7-67
DRAWN	W COOK	3-7-67
CHECK	YAKSHAW	3-8-67
STRESS	REWohington	3-10-67
PROJECT	JR Settler	3-13-67
APPD		

SUPERSEDED BY:

Cessna AIRCRAFT CO.
COMMERCIAL AIRCRAFT DIV.
5800 E. PAWNEE
WICHITA, KANSAS

TITLE
WIRING DIAGRAM — AUDIO SWITCHING - DUAL NARCO MARK 12A

SIZE	CODE IDENT. NO.	DWG NO.
C	71379	0470400

SCALE:

PAGE: 2, 28

FORM NO. 80-215

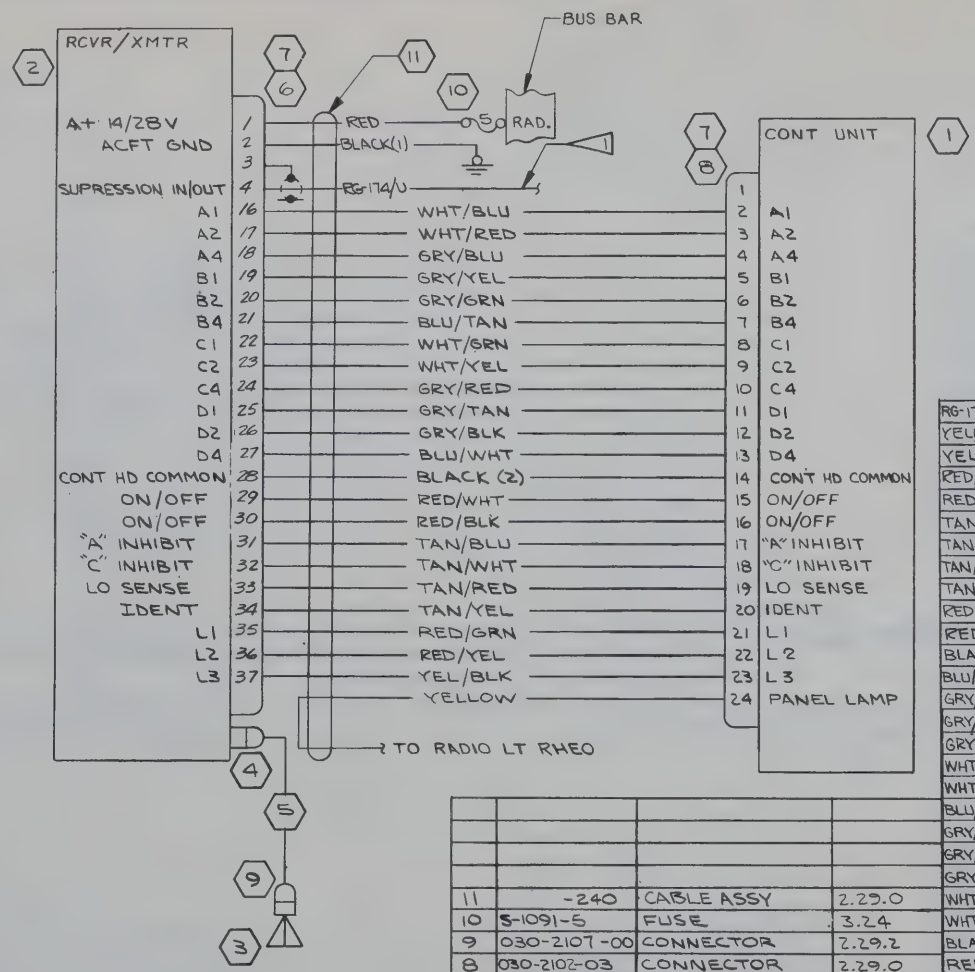

REVISION			
LET	DESCRIPTION	DATE	APPD
A	BY REV: GRY/RED WAS GRY/GRN(2), RED/WHT WAS RED(1), RED/BLK WAS RED(2), RED/YEL WAS YEL/WHT, YELLOW WAS GRY/YEL(2), GRY/YEL WAS GRY/YEL(1), GRY/GRN WAS GRY/GRN(1), RED WAS RED(3) ED&RR 10329 (SR5905)	RLY	JWH MDS DHT HCW MM

RG-174/U		CABLE		SOLDER	1		
YELLOW	20	-20-4		SOLDER	SOLDER		
YEL/BLK	22	-22-4-0			SOLDER		
RED/YEL	22	-22-2-4					
RED/GRN	22	-22-2-5					
TAN/YEL	22	-22-10-4					
TAN/RED	22	-22-10-2					
TAN/WHT	22	-22-10-9					
TAN/BLU	22	-22-10-6					
RED/BLK	18	-18-2-0					
RED/WHT	18	-18-2-9					
BLACK(2)	20	-20-0					
BLU/WHT	22	-22-6-9					
GRY/BLK	22	-22-8-0					
GRY/TAN	22	-22-8-10					
GRY/RED	22	-22-8-2					
WHT/YEL	22	-22-9-4					
WHT/GRN	22	-22-9-5					
BLU/TAN	22	-22-6-10					
GRY/GRN	22	-22-8-5					
GRY/YEL	22	-22-8-4					
GRY/BLU	22	-22-8-6					
WHT/RED	22	-22-9-2					
WHT/BLU	22	-22-9-6			SOLDER		
BLACK(1)	18	-18-0			S-1361-2-8		
RED	18	-18-2		SOLDER	S-1361-2-8		
WIRE CODE NO.	GA	MATERIAL	LG	TERMINALS			SERIALS

WIRE TABLE

ITEM NO.	PART NO.	DESCRIPTION	PAGE
11	-240	CABLE ASSY	2.29.0
10	S-1091-5	FUSE	3.24
9	030-2107-00	CONNECTOR	2.29.2
8	030-2102-03	CONNECTOR	2.29.0
7	030-1019-00	CABLE CLAMP HALF	3.24 & 4.11
6	030-2109-00	CONNECTOR	2.29.0
5	-241	CABLE ASSY	2.29.2
4	030-0060-00	CONNECTOR	2.29.2
3	C589505-0101	ANTENNA	6.12
2	C589504-0101	RCVR/XMTR UNIT 12V	4.11
1	C589503-0101	CONTROL UNIT 12V	3.24

EQUIPMENT TABLE

NOTES:

1. SUPRESSOR CABLE ROUTES WITH CABLE TO CONTROL PANEL. CENTER CONDUCTOR CONNECTS TO PIN 4 OF 300 DME CABLE & SHIELD CONNECTS TO PIN 8. CENTER CONDUCTOR TERMINATED WITH END CAP WHEN NOT USED

CES-1000 IS APPLICABLE VENDOR CODES PER S-1400
CES-XXXX=CESSNA SPEC. NO.
S-XXX OR CMXXXX=CESSNA STD. NO.

SUPERSEDES:

SUPERSEDED BY:

CONTRACT NO:

	NAME	DATE
DESIGN	V.R SIPES	8/5/68
GROUP	H. Wind	11-12-68
DRAWN	YOUNGERS	10-29-68
CHECK	HARRIS	11-5-68
STRESS	Wethington	11-11-68
PROJECT	Bill Moody	11-15-68
APPD	SWANEY	11-7-68

Cessna AIRCRAFT CO.
COMMERCIAL AIRCRAFT DIV.
5800 E. PAWNEE
WICHITA, KANSAS

TITLE
WIRING DIAGRAM — CESSNA 300 TRANSPONDER

SIZE	CODE IDENT. NO.	DWG NO.
C	71379	0470400

SCALE: NONE | 150 | PAGE: 2.29.1

FORM NO. 60-218A

ED&RR 10045 (SR5905)

TABLE OF CONTENTS

172 SERIAL 17257162 & ON
F172 SERIAL F172-0560 & ON
FR172 SERIAL FR172-0061 & ON

PAGE NO.	TITLE	DATE ISSUED	REV
2.0.5	Radio Audio, Power, & Lighting Circuits	10-3-68	NC
2.0.6	S. D. - Audio Junction Box, Internal Wiring	3-7-69	NC
2.4.2	W. D. - King KY-95, KX-120	10-3-68	C
2.8.4	W. D. - Narco Mark 12A with VOA-8 & VOA-9	10-3-68	NC
2.8.5	W. D. - Narco Mark 12A with VOA-8 & VOA-9	10-3-68	NC
2.12.2.1	Cessna Comm 300 (ARC Type 524A)	10-3-68	NC
2.19.4	W. D. - Cessna 300R NAV/COM (ARC Type 517R & 540A)	4-23-68	NC
2.19.5	W. D. - Cessna 300R NAV/COM (ARC Type 517R & 540A)	4-23-68	NC
2.19.6	W. D. - Cessna 300R NAV/COM (ARC Type 517R & 540A)	4-23-68	NC
2.19.7	W. D. - Cessna 300R NAV/COM (ARC Type 517R & 540A)	4-23-68	NC
2.21	W. D. - Cessna ADF 300 (ARC Type 521B)	10-3-68	B
2.24.1	W. D. - Cessna DME 300	10-3-68	B
2.30.5	W. D. - Cessna 300 Marker Beacon (Type 502B)	10-3-68	NC
2.33.2	W. D. - King KX-160E Nav/Com	10-3-68	C
2.33.3	W. D. - King KX-160E Nav/Com	10-3-68	C
2.35.3	W. D. - King KA-25C Audio Amplifier	10-3-68	NC
2.36.1	Narco UGR-2 Glideslope with Narco Mark 12A & VOA-9	11-29-67	A
2.37.1	W. D. - Cessna 400 Glideslope (ARC Type R-543B)	12-15-67	A
2.38.1	W. D. - Cessna 400 Glideslope (ARC Type R-543B)	12-15-67	A
2.39.3.1	W. D. - Typical Switching, NARCO Mark 12A & ADF	12-5-68	NC

TABLE OF CONTENTS

PAGE NO.	TITLE	DATE ISSUED	REV
2.40.0	Cable Assy - Audio & XMTR Selector Switch	10-3-68	A
2.40.1	Cable Assy - Audio & Omni Selector Switch	10-3-68	A
2.40.8	W. D. - Audio Selector Switches	10-3-68	NC
2.40.9	W. D. - Transmitter Selector Switch	10-3-68	NC
2.40.10	W. D. - OMNI Selector Switch	10-3-68	NC
2.41.1.1	Cessna 300 HF	1-27-69	B
2.41.1.2	Cessna 300 HF	4-4-68	A
2.42.1	W. D. - Cessna 300 Transponder	2-3-69	A
	DRAWING NUMBER 0500062		
14.3	Omni Selector Switch (Opt.)	2-6-64	NC
14.8.1	W. D. - Cessna 300 Nav-O-Matic Autopilot (14-Volt)	7-22-68	A
14.8.2	W. D. - Cessna 300 Nav-O-Matic Autopilot (14-Volt)	6-6-68	NC

REVISION			
LET	DESCRIPTION	DATE	APPD

NOTES:

1. AMP RATING OF S-1360 CKT BKR TO BE DETERMINED BY INSTL
2. WIRES TO BE OF SUFFICIENT LENGTH TO ALLOW CONNECTION TO ALL POSSIBLE RADIO COMBINATION TERMINALS TO ATTACH TO WIRES AS REQD BY THE VARIOUS RADIO INSTALLATIONS

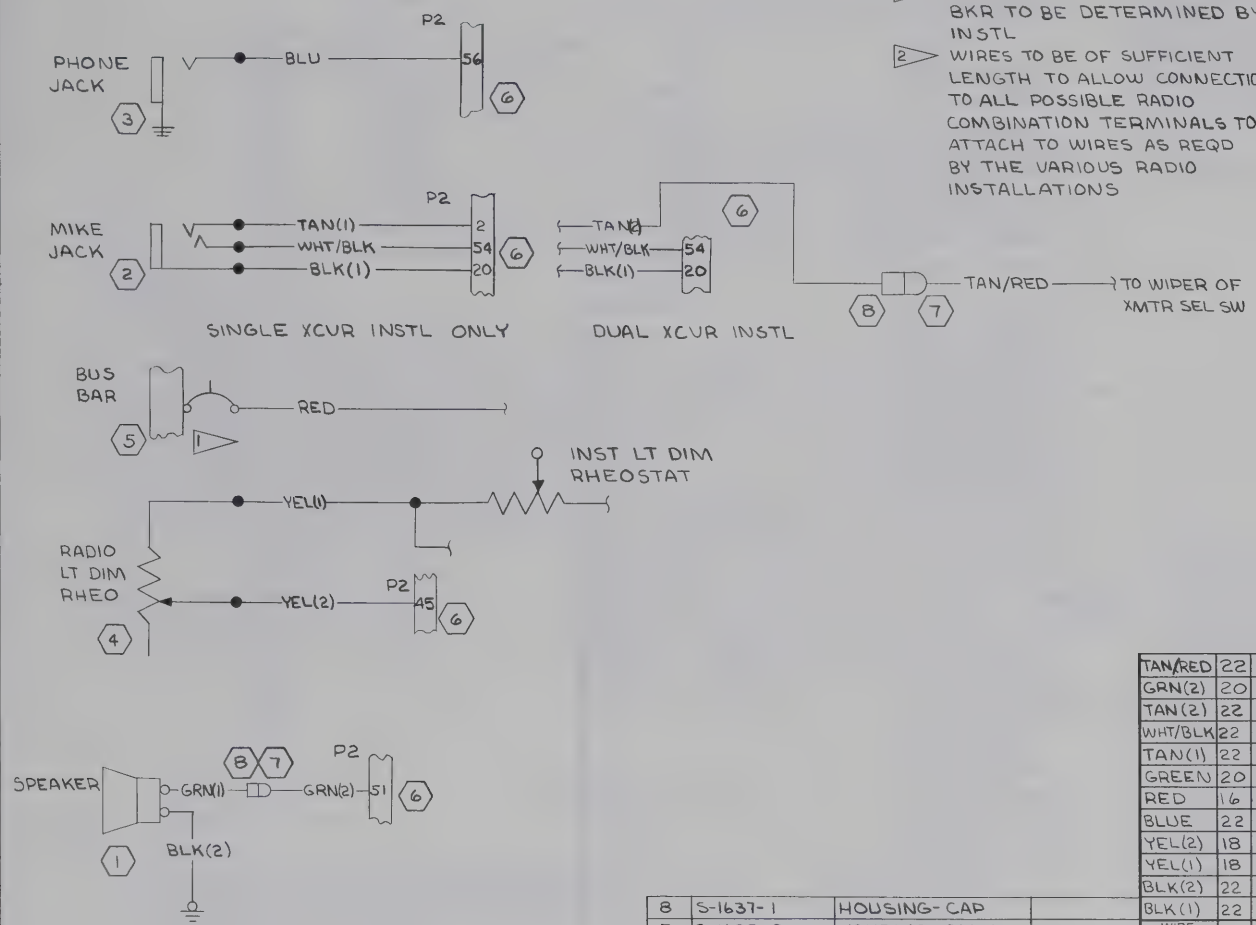

WIRE CODE NO.	GA	MATERIAL	LG	TERMINALS			SERIALS
TAN/RED	22	-22-10-2		S-1636-1	2		
GRN(2)	20	-20-5		S-1837-1	S-1636-1		
TAN(2)	22	-22-10		S-1635-1	SOLDER		
WHT/BLK	22	-22-9-0		S-1837-1	SOLDER		
TAN(1)	22	-22-10		S-1837-1	SOLDER		
GREEN	20	-20-5		S-1370-1	S-1837-1		
RED	16	-16-2		2	S-1367-2-6		
BLUE	22	-22-6		S-1837-1	SOLDER		
YEL(2)	18	-18-4		SOLDER	S-1837-1		
YEL(1)	18	-18-4		SOLDER	2		
BLK(2)	22	-22-0		S-1829-1	S-1367-1-8		
BLK(1)	22	-22-0		S-1837-1	SOLDER		

WIRE TABLE

ITEM NO.	PART NO.	DESCRIPTION	
8	S-1637-1	HOUSING-CAP	
7	S-1637-2	HOUSING-PLUG	
6	S-1838-1	CONNECTOR	
5	S-1360	CKT BKR	
4	0413126-5	RHEOSTAT	
3	S-1612-1	PHONE JACK	
2	S-1102-1	MIKE JACK	
1	C596504-0101	SPEAKER	

EQUIPMENT TABLE

CES-1000 IS APPLICABLE
VENDOR CODES PER S-1400
CES-XXXX=CESSNA SPEC. NO.
S-XXX OR CMXXXX=CESSNA STD. NO.

SUPERSEDES: P.2.0.1

SUPERSEDED BY:

CONTRACT NO:

	NAME	DATE
DESIGN	VRSIPES	10/2/68
GROUP	H. Wise	10-7-68
DRAWN	SCRAPER	9-17-68
CHECK	G. IRVIN	9-24-68
STRESS	[illegible]	[illegible]
PROJECT	Ted Woody	10-4-68
APPD	SWANEY	9-27-68

Cessna AIRCRAFT CO.
COMMERCIAL AIRCRAFT DIV.
5800 E. PAWNEE
WICHITA, KANSAS

TITLE
WIRING DIAGRAM — RADIO AUDIO, POWER, & LIGHING CIRCUITS

SIZE	CODE IDENT. NO.	DWG NO.
C	71379	0570400

SCALE: NONE | 172, R172 | PAGE: 2.05

FORM NO. 80-215A

ED&RR02394 (SR5522) IX

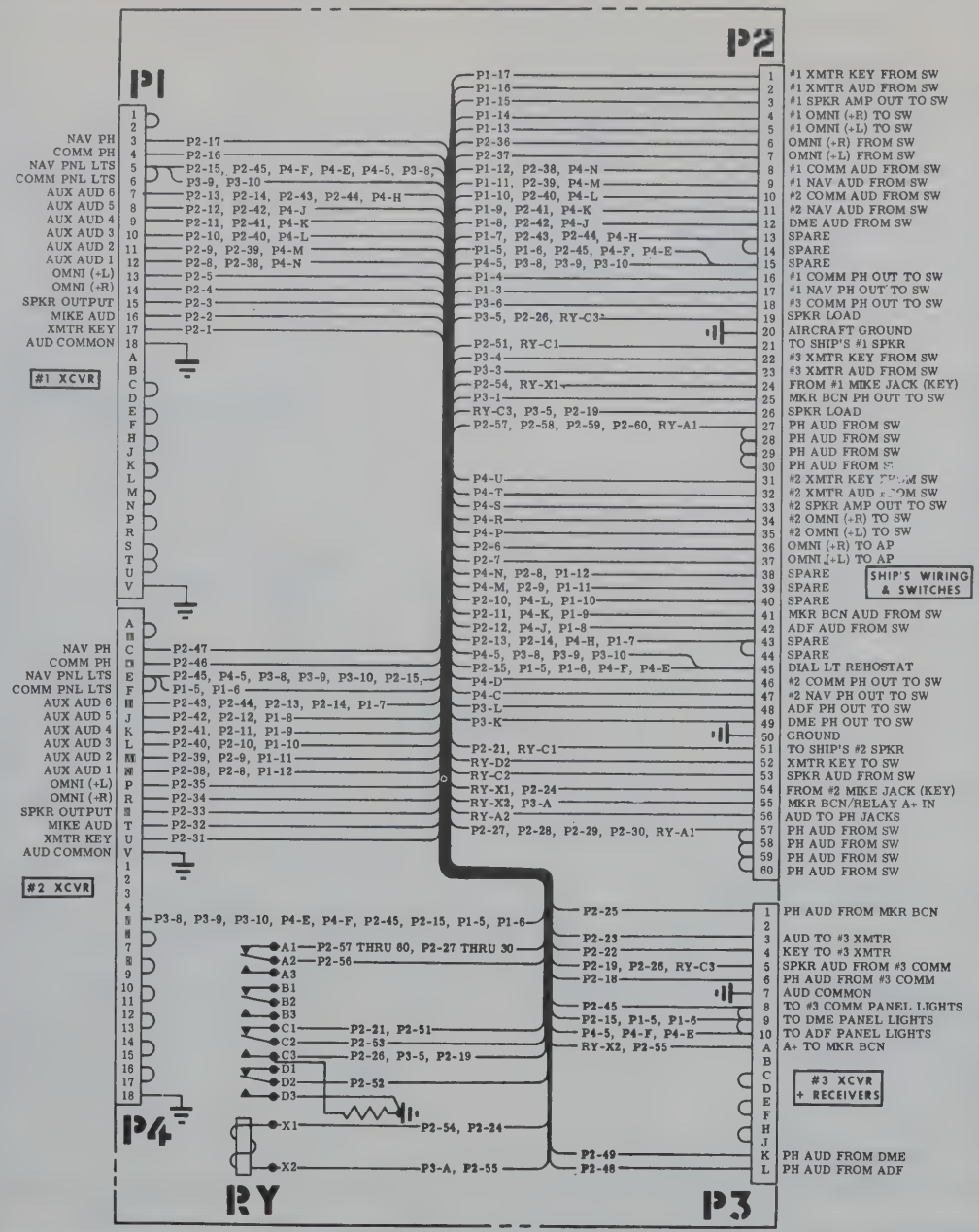

REVISIONS			
LTR	DESCRIPTION	DATE	APPROVED
A	BY REV: 465195-2 WAS 46195-2, ADD NOTE 8. EDRR 24170		

NOTES:

1. THIS DRAWING FOR TECHNICAL USE ONLY
2. P1 AND P4 MATE WITH S-1838-2 HOUSING (AMP 1-582191-5)
3. P2 MATES WITH S-1838-1 HOUSING (AMP 480146-7)
4. P3 MATES WITH S-1838-3 HOUSING (AMP 582963-2)
5. ALL THE ABOVE HOUSINGS USE S-1837-1 CONTACT PINS (AMP 42717-3LP) AND S-1836-1 KEYING PLUGS (AMP 582501-1)
6. CONTACTS CRIMP ON WITH AMP TOOL 90017
7. CONTACTS EXTRACT WITH AMP TOOL 465195-2
8. IF A CRIMPING TOOL IS NOT AVAILABLE WIRES MAY BE SOLDERED TO PINS IN LIEU OF CRIMPING

CONTRACT NO:	NAME	DATE
DESIGN	V R SIPES	1-13-69
GROUP	H. Wise	3-11-69
DRAWN	NUCKOLLS	2-7-69
CHECK	HARRIS	3-4-69
STRESS	R.L. Worthington	3-6-69
PROJECT	J.L. Moody	3-12-69
APPD	M. Downey	3-5-69

Cessna AIRCRAFT CO.
COMMERCIAL AIRCRAFT DIV.
5800 E. PAWNEE
WICHITA, KANSAS

TITLE
SCHEMATIC DIAGRAM - AUDIO JUNCTION BOX, INTERNAL WIRING

SIZE	CODE IDENT. NO.	DWG NO.
C	71379	0570400

SCALE: NONE | 172 | PAGE: 2.0.6

ED & RR 10361 SER 17257162 & ON

(SR-4041) IX XI

CHG LET	REVISION	BY / DATE	CHK / APPD
A	ADDED DETAIL A, NOTE 3, GRY/RED, GRY/GRN. (SR-4463)	E.S. 12-14-63	
B	BY REV: REVISE NOTE 1	JWH 8-31-67	

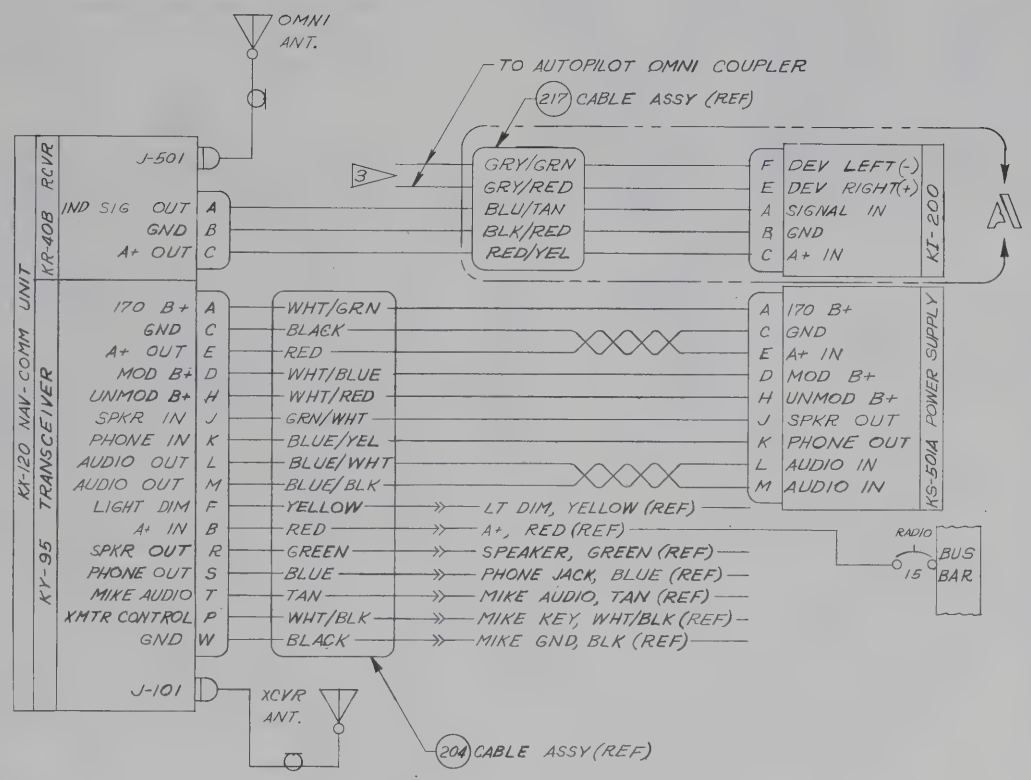

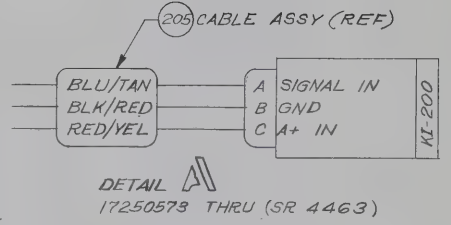

NOTES:

1. WIRING SHOWN IS FOR SINGLE INSTALLATION. SEE PAGES 2.0.2 & 2.0.3 THRU 17253392 & TO 2.0.3 & 2.32.1.0 17253393 & ON WHEN INSTALLED WITH OTHER UNITS.
2. WIRE MATERIAL PER S-1460.
3. WIRES NOT USED SHALL BE SLEEVED AND TIED INTO BUNDLE.

INACTIVE: EFF SER 17250573 THRU SER 17257161 9-17-68 ED&RR02394 LES JWH GRW MDS HFW TM

WIRE CODE NO.	GA	MATERIAL	LG	TERMINALS			SERIALS
GRY/GRN	22	-22-8-5		SOLDER			(SR 4463) & ON
GRY/RED	22	-22-8-2		SOLDER			(SR 4463) & ON
BLU/TAN	22	-22-6-10		SOLDER	SOLDER		
BLK/RED	22	-22-0-2		SOLDER			
RED/YEL	22	-22-2-4		SOLDER			
BLACK	22	-22-0		S-341-2			
BLACK	16	-16-0		SOLDER			
RED	16	-16-2					
WHT/GRN	22	-22-9-5					
WHT/BLU	22	-22-9-6					
WHT/RED	22	-22-9-2					
GRN/WHT	20	-20-5-9					
BLU/YEL	22	-22-6-4					
BLU/WHT	22	-22-6-9					
BLU/BLK	22	-22-6-0		SOLDER			
YELLOW	18	-18-4		S-341-2			
RED	16	-16-2		S-341-1			
GREEN	20	-20-5		S-341-2			
BLUE	22	-22-6		S-341-2			
TAN	22	-22-10		S-341-2			
WHT/BLK	22	-22-9-0		S-341-2	SOLDER		

2 WIRE TABLE

CESSNA AIRCRAFT CO., COMMERCIAL AIRCRAFT DIVISION, WICHITA, KANSAS

	NAME	DATE
DRAWN	SPRIGGS	4-10-63
GROUP	PARSONS	6-24-63
CHECK	R. Stuck	6-19-63
PROJ	[signature]	6-24-63

TITLE: WIRING DIAGRAM — KING KY-95, KX-120

Cessna.

DWG NO: 0570400

SUPERSEDED BY	SUPERSEDES	MODEL: 172-R-172	REV: B	PAGE: 2.4.2

ITEM NO	PART NO.	DESCRIPTION	INSTALLED ON

EQUIPMENT TABLE

FORM NO. 80-161

REVISION			
LET	DESCRIPTION	DATE	APPD

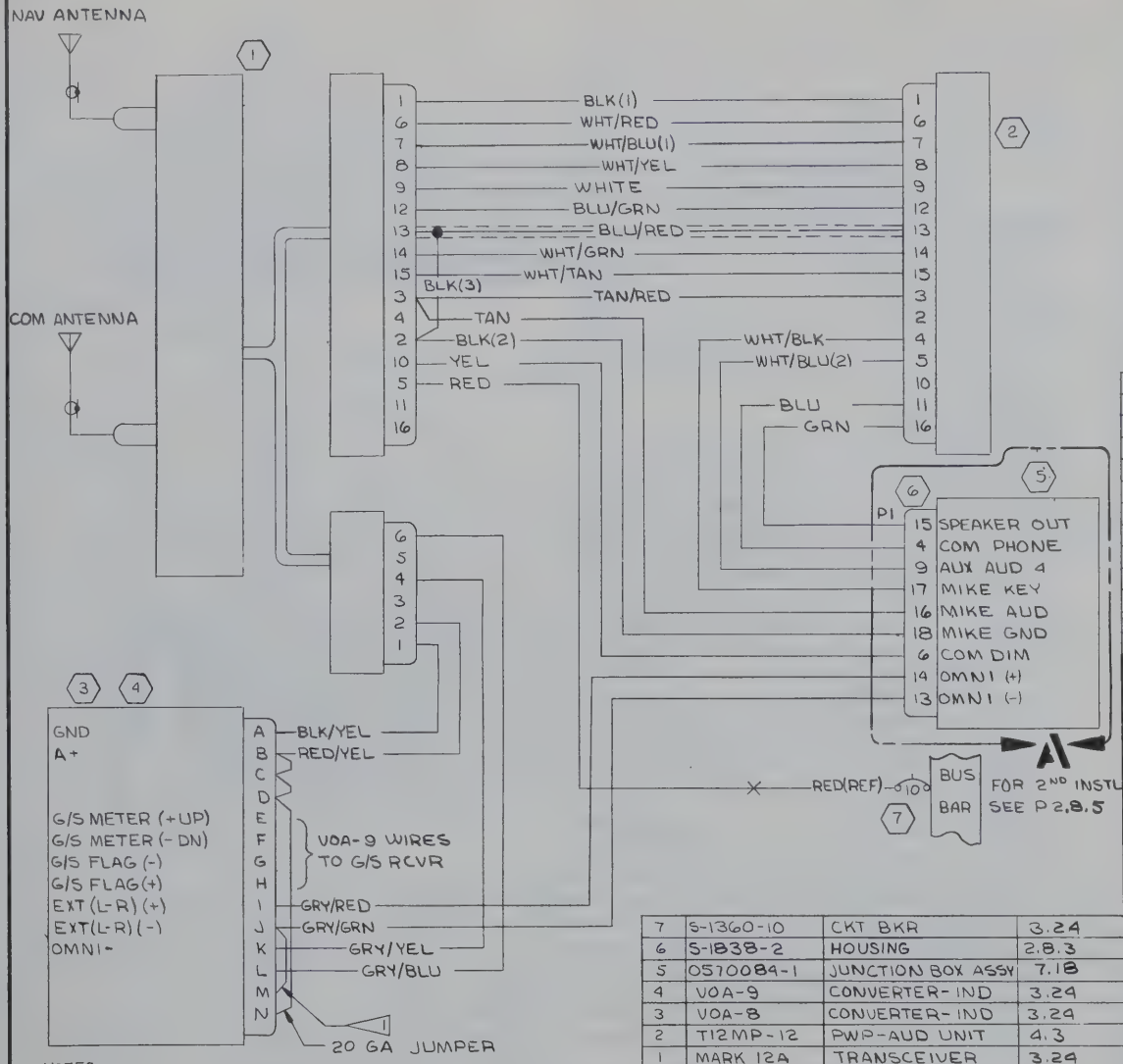

WIRE CODE NO.	GA	MATERIAL	LG	TERMINALS			SERIALS
BLK(3)	22	-22-0		SOLDER	SOLDER		
GRY/BLU	22	-22-8-6		SOLDER			
GRY/YEL		-22-8-4		SOLDER			
GRY/GRN		-22-8-5		S-1837-1			
GRY/RED		-22-8-2		S-1837-1			
RED/YEL		-22-2-4		SOLDER			
BLK/YEL	22	-22-0-4		SOLDER			
BLU/RED	22S	-22-6-2		SOLDER			
BLU/GRN	22	-22-6-5		SOLDER			
WHT/TAN		-22-9-10		SOLDER			
WHT/GRN		-22-9-5		SOLDER			
WHT/YEL		-22-9-4		SOLDER			
WHT/BLU(2)		-22-9-6		S-1837-1			
WHT/BLU(1)		-22-9-6		SOLDER			
WHT/RED		-22-9-2		SOLDER			
WHT/BLK		-22-9-0		S-1837-1			
TAN/RED		-22-10-2		SOLDER			
BLK(2)	22	-22-0		S-1837-1			
BLK(1)	16	-16-0		SOLDER			
TAN	22	-22-10		S-1837-1			
BLU	22	-22-6		S-1837-1			
YEL	18	-18-4		S-1837-1			
RED	16	-16-2		S-1370-2			
GREEN	20	-20-5		S-1837-1			
WHITE	14	-14-9		SOLDER	SOLDER		

WIRE TABLE

ITEM NO.	PART NO.	DESCRIPTION	PAGE
7	S-1360-10	CKT BKR	3.24
6	S-1838-2	HOUSING	2.8.3
5	0570089-1	JUNCTION BOX ASSY	7.18
4	VOA-9	CONVERTER-IND	3.24
3	VOA-8	CONVERTER-IND	3.24
2	T12MP-12	PWR-AUD UNIT	4.3
1	MARK 12A	TRANSCEIVER	3.24

EQUIPMENT TABLE

NOTES:

1. THIS JUMPER USED ONLY WHEN DUAL INSTALLATIONS ARE REQD WITH CESSNA NAV-O-MATIC SYSTEMS

CES-1000 IS APPLICABLE
VENDOR CODES PER S-1400
CES-XXXX=CESSNA SPEC. NO.
S-XXX OR CMXXXX=CESSNA STD. NO.

SUPERSEDES: P2.8.2

SUPERSEDED BY:

CONTRACT NO:

	NAME	DATE
DESIGN	VR SIPES	8/19/68
GROUP	H. Wise	9-28-68
DRAWN	L. SCRAPER	9-18-68
CHECK	G. IRVIN	9-25-68
STRESS	G GUTHRIE	9-28-68
PROJECT	Ed Mosby	9-30-68
APPD	S WANEK	9-27-68

Cessna AIRCRAFT CO.
COMMERCIAL AIRCRAFT DIV.
5800 E. PAWNEE
WICHITA, KANSAS

TITLE
WIRING DIAGRAM — NARCO MARK 12A WITH VOA-8 & VOA-9

SIZE	CODE IDENT. NO.	DWG NO.
C	71379	0570400

SCALE: NONE | 172 | PAGE: 2.8.4

FORM NO 80-215A

ED4RR 02394 (SR5522) IX

REVISION			
LET	DESCRIPTION	DATE	APPD

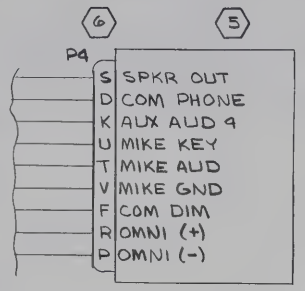

DETAIL A
2ND INSTL

WIRE CODE NO.	GA	MATERIAL	LG	TERMINALS		SERIALS

WIRE TABLE

ITEM NO.	PART NO.	DESCRIPTION
	EQUIPMENT TABLE	

CES-1000 IS APPLICABLE
VENDOR CODES PER S-1400
CES-XXXX=CESSNA SPEC. NO.
S-XXX OR CMXXXX=CESSNA STD. NO.

SUPERSEDES:

SUPERSEDED BY:

CONTRACT NO:

	NAME	DATE
DESIGN	VR SIPES	8/19/68
GROUP	H. Wiso	9-28-68
DRAWN	L. SCRAPER	9-18-68
CHECK	G. IRVIN	9-25-68
STRESS	G. GUTHRIE	9-28-68
PROJECT	Ted Moody	9-30-68
APPD	SWANEY	9-27-68

Cessna AIRCRAFT CO.
COMMERCIAL AIRCRAFT DIV.
5800 E. PAWNEE
WICHITA, KANSAS

TITLE
WIRING DIAGRAM — NARCO MARK 12A WITH VOA-8 & VOA-9

SIZE	CODE IDENT. NO.	DWG NO.
C	71379	0570400

SCALE: NONE | 172 | PAGE: 2.8.5

FORM NO. 80-215A

ED&RR 02394 (SR 5522) IX

REVISION			
LET	DESCRIPTION	DATE	APPD

NOTES:

1. ON SINGLE CESSNA COMM INSTL, RED/BLK WIRE (PIN K) IS CONNECTED TO RED/WHT WIRE (PIN S) WITH AN S-1370-1 SPLICE. WHEN 300 COMM IS INSTL WITH OTHER RADIOS, RED/WHT WIRE CONNECTS TO CKT BKR AS SHOWN; RED/BLK WIRE IS TERMINATED WITH S-1557-1 CAP
2. BLACK 16GA WIRE IS HALVED, 1/2 SOLDERS TO PIN A, 1/2 SOLDERS TO GND LUG

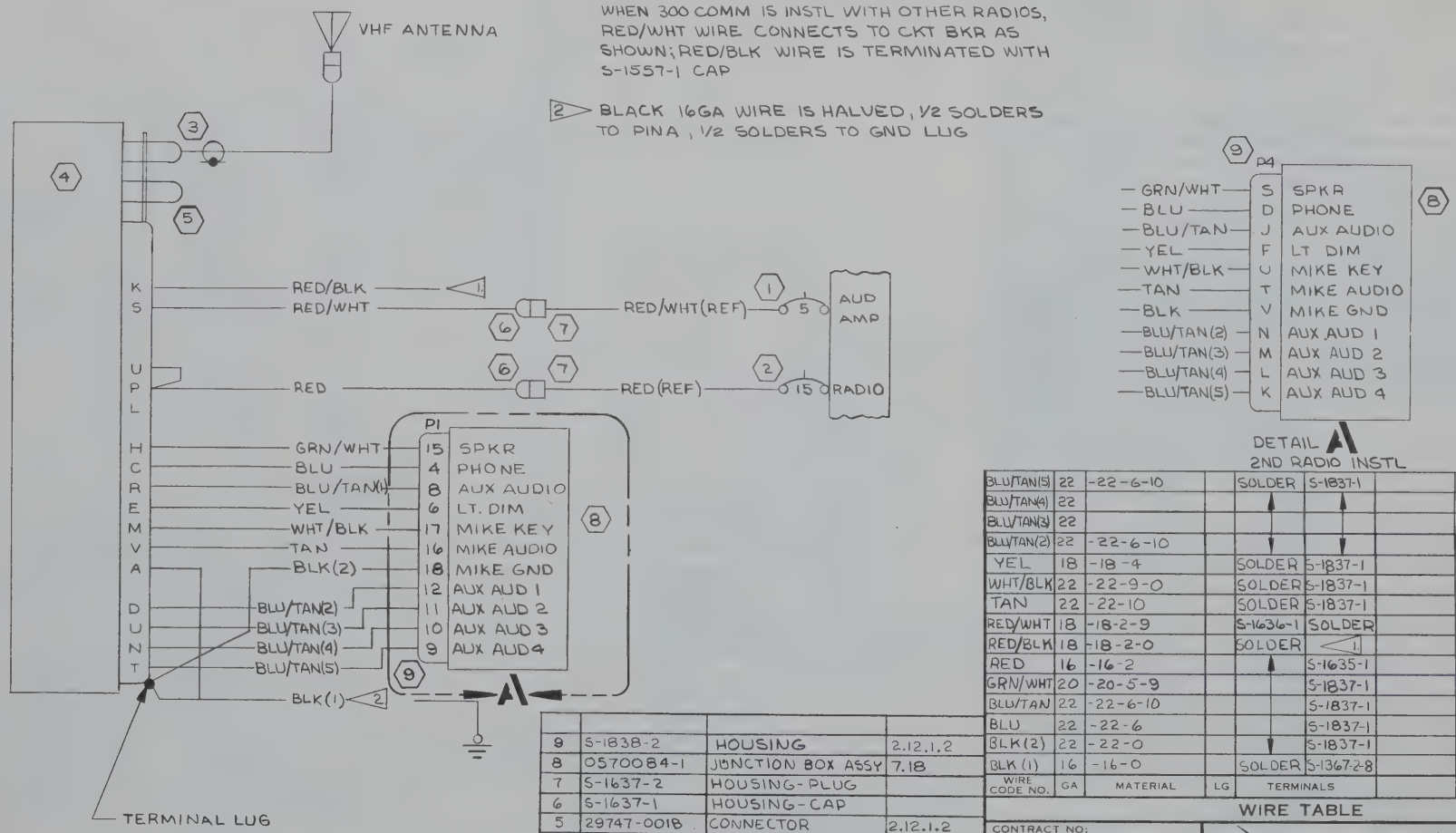

DETAIL A
2ND RADIO INSTL

WIRE CODE NO.	GA	MATERIAL	LG	TERMINALS		SERIALS
BLU/TAN(5)	22	-22-6-10		SOLDER	S-1837-1	
BLU/TAN(4)	22					
BLU/TAN(3)	22					
BLU/TAN(2)	22	-22-6-10				
YEL	18	-18-4		SOLDER	S-1837-1	
WHT/BLK	22	-22-9-0		SOLDER	S-1837-1	
TAN	22	-22-10		SOLDER	S-1837-1	
RED/WHT	18	-18-2-9		S-1636-1	SOLDER	
RED/BLK	18	-18-2-0		SOLDER	1	
RED	16	-16-2			S-1635-1	
GRN/WHT	20	-20-5-9			S-1837-1	
BLU/TAN	22	-22-6-10			S-1837-1	
BLU	22	-22-6			S-1837-1	
BLK(2)	22	-22-0			S-1837-1	
BLK(1)	16	-16-0		SOLDER	S-1367-2-8	

WIRE TABLE

ITEM NO	PART NO.	DESCRIPTION	
9	S-1838-2	HOUSING	2.12.1.2
8	0570084-1	JUNCTION BOX ASSY	7.18
7	S-1637-2	HOUSING-PLUG	
6	S-1637-1	HOUSING-CAP	
5	29747-0018	CONNECTOR	2.12.1.2
4	31390-1514	RCVR/XMTR (ARC TYPE 524A)	3.12
3	29753	CONNECTOR	2.12.1.2
2	S-1360-15	CIRCUIT BKR	3.12
1	S-1360-5	CIRCUIT BKR	3.12

EQUIPMENT TABLE

CES-1000 IS APPLICABLE
VENDOR CODES PER S-1400
CES-XXXX=CESSNA SPEC. NO.
S-XXX OR CMXXXX=CESSNA STD. NO.

SUPERSEDES: R2.12.2

SUPERSEDED BY:

CONTRACT NO:

	NAME	DATE
DESIGN	VR SIPES	10/2/68
GROUP	H. Wiso	10-4-68
DRAWN	SCRAPER	9-17-68
CHECK	HARRIS	9-24-68
STRESS		
PROJECT	Ted Moody	10-4-68
APPD	E WANEY	10-27-68

Cessna AIRCRAFT CO.
COMMERCIAL AIRCRAFT DIV.
5800 E. PAWNEE
WICHITA, KANSAS

TITLE
WIRING DIAGRAM —
CESSNA COMM 300
(ARC TYPE 524A)

SIZE	CODE IDENT. NO.	DWG NO.
C	71379	0570400

SCALE: NONE | 172 | PAGE: 2.12.2.1

FORM NO 80-218A

ED&RR02394 (SK5522)II

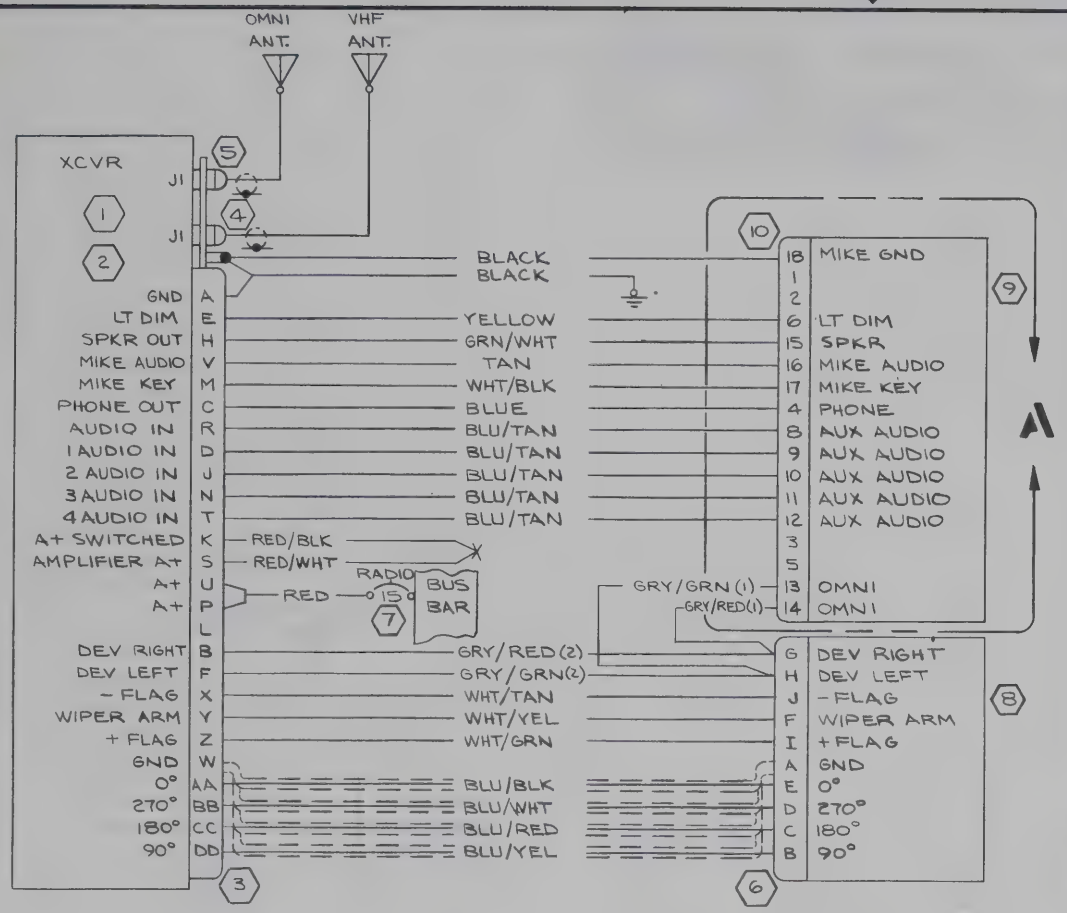

REVISION			
LET	DESCRIPTION	DATE	APPD

WIRE CODE NO.	GA	MATERIAL	LG	TERMINALS		SERIALS
BLACK	22	-22-0		SOLDER	S-1837-1	
BLACK	16	-16-0			S-1367-2-8	
YELLOW	18	-18-4			S-1837-1	
GRN/WHT	20	-20-5-9			S-1837-1	
TAN	22	-22-10			S-1837-1	
WHT/BLK	22	-22-9-0			S-1837-1	
BLUE	22	-22-6			S-1837-1	
BLU/TAN	22	-22-6-10			S-1837-1	
BLU/TAN	22	-22-6-10			S-1837-1	
BLU/TAN	22	-22-6-10			S-1837-1	
BLU/TAN	22	-22-6-10			S-1837-1	
BLU/TAN	22	-22-6-10			S-1837-1	
RED/BLK	18	-18-2-9			S-1370-1	
RED/WHT	18	-18-2-9				
RED	16	-16-2			S-1367-2-8	
GRY/RED(1)	22	-22-8-2			S-1837-1	
GRY/GRN(1)	22	-22-8-5			S-1837-1	
GRY/RED(2)	22	-22-8-2			SOLDER	
GRY/GRN(2)	22	-22-8-5				
WHT/TAN	22	-22-9-10				
WHT/YEL	22	-22-9-4				
WHT/GRN	22	-22-9-5				
BLU/BLK	22	-22-6-0				
BLU/WHT	22	-22-6-9				
BLU/RED	22	-22-6-2				
BLU/YEL	22	-22-6-4		SOLDER	SOLDER	

WIRE TABLE

ITEM NO.	PART NO.	DESCRIPTION
10	S-1838-2	CONNECTOR
9	0570084-1	JUNCTION BOX
8	31640-0000	IND (ARC TYPE IN514R)
7	S-1360-15	CIRCUIT BREAKER
6	32604	CONNECTOR (00781)
5	29752	CONNECTOR (00781)
4	29753	CONNECTOR (00781)
3	29747-0026	CONNECTOR (00781)
2	34640-1114	XCVR (ARC TYPE 515R)
1	32580-1114	XCVR (ARC TYPE 514R-1)

EQUIPMENT TABLE

CES-1000 IS APPLICABLE VENDOR CODES PER S-1400
CES-XXXX=CESSNA SPEC. NO,
S-XXX OR CMXXXX=CESSNA STD. NO.

SUPERSEDES: P2.19.1

SUPERSEDED BY:

CONTRACT NO:

	NAME	DATE
DESIGN		
GROUP	H. Wild	4-8-68
DRAWN	YOUNGERS	4-3-68
CHECK	G. IRVIN	4-5-68
STRESS	AZW	4-8-68
PROJECT	DG Koela	4-17-68
APPD	SWANEY	4-5-68

Cessna AIRCRAFT CO.
COMMERCIAL AIRCRAFT DIV.
5800 E. PAWNEE
WICHITA, KANSAS

TITLE
WIRING DIAGRAM —
CESSNA 300R NAV/COM
(ARC TYPE 517R & 540A)

SIZE	CODE IDENT. NO.	DWG NO.
C	71379	0570400

SCALE: NONE | 172 | PAGE: 2.19.4

FORM NO. 80-215A

EDERR 01983 (SR5522) TX

REVISION			
LET	DESCRIPTION	DATE	APPD

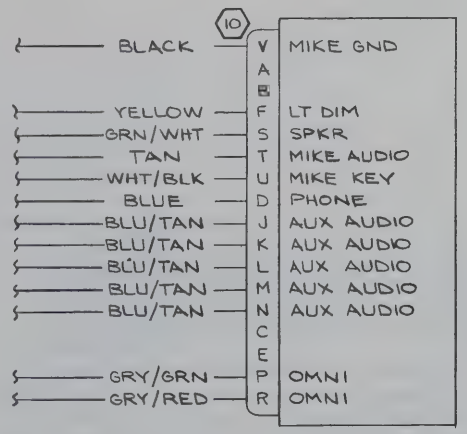

DETAIL A
2ND RADIO INSTL

WIRE CODE NO.	GA	MATERIAL	LG	TERMINALS		SERIALS

WIRE TABLE

ITEM NO.	PART NO.	DESCRIPTION

EQUIPMENT TABLE

CES-1000 IS APPLICABLE
VENDOR CODES PER S-1400
CES-XXXX=CESSNA SPEC. NO.
S-XXX OR CMXXXX=CESSNA
STD. NO.

SUPERSEDES: P 2.19.1

SUPERSEDED BY:

CONTRACT NO:

	NAME	DATE
DESIGN		
GROUP	H. Wise	4-8-68
DRAWN	YOUNGERS	4-3-68
CHECK	G. IRVIN	4-5-68
STRESS	RWW	4-8-68
PROJECT	D.G. Kolda	4-17-68
APPD	SWANEY	4-5-68

Cessna AIRCRAFT CO.
COMMERCIAL AIRCRAFT DIV.
5800 E. PAWNEE
WICHITA, KANSAS

TITLE
WIRING DIAGRAM —
CESSNA 300R NAV/COM
(ARC TYPE 517R & 540A)

SIZE	CODE IDENT. NO.	DWG NO.
C	71379	0570400

SCALE: NONE | 172 | PAGE: 2.19.5

FORM NO. 80-215A

ED&RR 01983 (SR5522) IR

REVISION			
LET	DESCRIPTION	DATE	APPD

WIRE CODE NO.	GA	MATERIAL	LG	TERMINALS		SERIALS
BLACK	22	-22-0		SOLDER	S-1837-1	
BLACK	16	-16-0			S-1367-2-8	
YELLOW	18	-18-4			S-1837-1	
GRN/WHT	20	-20-5-9				
TAN	22	-22-10				
WHT/BLK	22	-22-9-0				
BLUE	22	-22-6				
BLU/TAN	22	-22-6-10				
BLU/TAN	22	-22-6-10				
BLU/TAN	22	-22-6-10				
BLU/TAN	22	-22-6-10				
BLU/TAN	22	-22-6-10			S-1837-1	
RED/BLK	18	-18-2-0			S-1370-1	
RED/WHT	18	-18-2-9				
RED	16	-16-2			S-1367-2-8	
GRY/RED(1)	22	-22-8-2			S-1837-1	
GRY/GRN(1)	22	-22-8-5			S-1837-1	
GRY/RED(2)	22	-22-8-2			SOLDER	
GRY/GRN(2)	22	-22-8-5				
WHT/TAN	22	-22-9-10				
WHT/YEL	22	-22-9-4				
WHT/GRN	22	-22-9-5				
BLU/BLK	22	-22-6-0				
BLU/WHT	22	-22-6-9				
BLU/RED	22	-22-6-2				
BLU/YEL	22	-22-6-4		SOLDER	SOLDER	

WIRE TABLE

ITEM NO.	PART NO.	DESCRIPTION
9	S-1838-2	CONNECTOR
8	0570084-1	JUNCTION BOX
7	18397	CONNECTOR (00781)
6	29747-0026	CONNECTOR (00781)
5	29752	CONNECTOR (00781)
4	29753	CONNECTOR (00781)
3	S-1360-15	CIRCUIT BREAKER
2	32350-0000	INDICATOR (ARC TYPE IN-525A)
1	36150-1414	XCVR (ARC TYPE RT-515R-1)

EQUIPMENT TABLE

CES-1000 IS APPLICABLE
VENDOR CODES PER S-1400
CES-XXXX=CESSNA SPEC. NO.
S-XXX OR CMXXXX=CESSNA
STD. NO.

SUPERSEDES: P 2.19.2

SUPERSEDED BY:

CONTRACT NO:

	NAME	DATE
DESIGN		
GROUP	H. Wise	1-8-68
DRAWN	YOUNGERS	4-3-68
CHECK	G IRVIN	4-5-68
STRESS	RHW	4-8-68
PROJECT	DG Kolla	4-17-68
APPD	SWANEY	4-5-68

Cessna AIRCRAFT CO.
COMMERCIAL AIRCRAFT DIV.
5800 E. PAWNEE
WICHITA, KANSAS

TITLE
WIRING DIAGRAM —
CESSNA 300R NAV/COM
(ARC TYPE 517R & 540A)

SIZE	CODE IDENT. NO.	DWG NO.
C	71379	0570400

SCALE: NONE | 172 | PAGE: 2.19.6

FORM NO. 80-215A

ED&RR 01983 (SR5622) IX

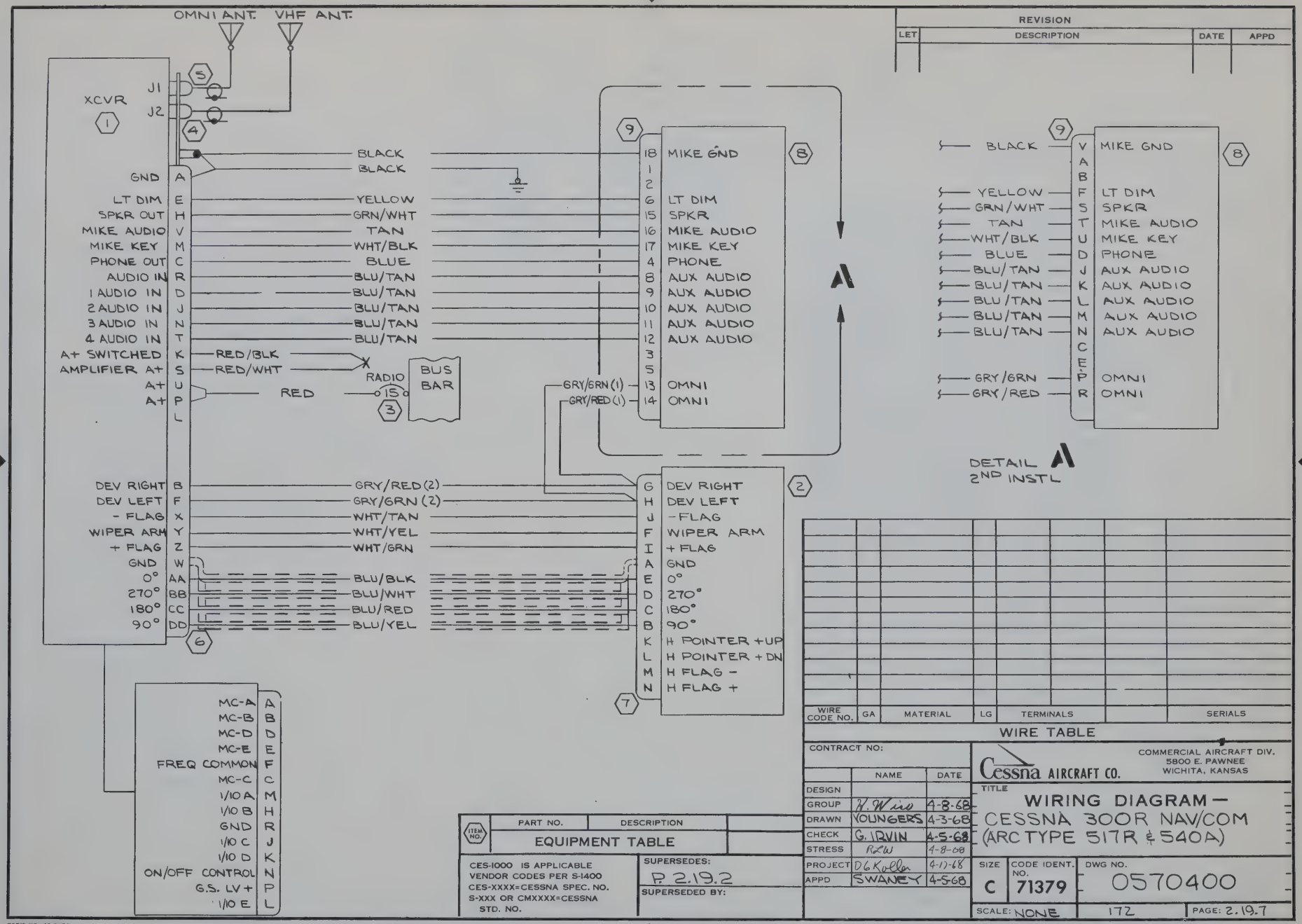

REVISION			
LET	DESCRIPTION	DATE	APPD

WIRE CODE NO.	GA	MATERIAL	LG	TERMINALS		SERIALS

WIRE TABLE

ITEM NO.	PART NO.	DESCRIPTION
		EQUIPMENT TABLE

CES-1000 IS APPLICABLE
VENDOR CODES PER S-1400
CES-XXXX=CESSNA SPEC. NO.
S-XXX OR CMXXXX=CESSNA STD. NO.

SUPERSEDES: P. 2.19.2

SUPERSEDED BY:

CONTRACT NO:

	NAME	DATE
DESIGN		
GROUP	H. Wind	4-8-68
DRAWN	YOUNGERS	4-3-68
CHECK	G. IRVIN	4-5-68
STRESS	RCW	4-8-68
PROJECT	D G Koller	4-17-68
APPD	SWANEY	4-5-68

Cessna AIRCRAFT CO.
COMMERCIAL AIRCRAFT DIV.
5800 E. PAWNEE
WICHITA, KANSAS

TITLE
WIRING DIAGRAM —
CESSNA 300R NAV/COM
(ARC TYPE 517R & 540A)

SIZE	CODE IDENT. NO.	DWG NO.
C	71379	0570400

SCALE: NONE | 172 | PAGE: 2.19.7

FORM NO. 60-215A

EDERR 01983 (SR5522) IX

CHG LET	REVISION	BY / DATE	CHK / APPD
A	ADDED CHOKE IN A+ LINE & NOTE 1. ADDED EQUIP TABLE. GND WIRE WAS PIN 11	SKH 9-10-65	RES HRW
B	BY REV: ADD DETAIL A, S-1838-3, & 0570084-1 ED & RR 02394 (SR5522) IX	LES 9-17-68	JWH MDS GRG HRW TRM

CABLE ASSY SHALL BE SUPPLIED BY VENDOR AS PART OF DUST COVER OR SEPERATELY FOR PARTIAL INSTALLATIONS.

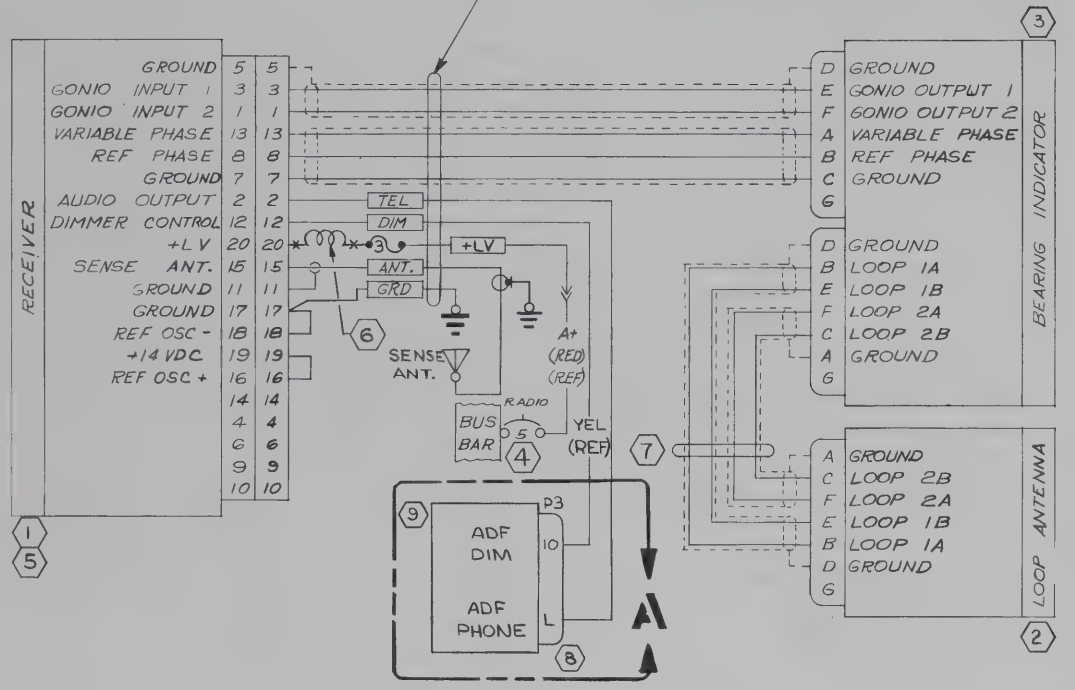

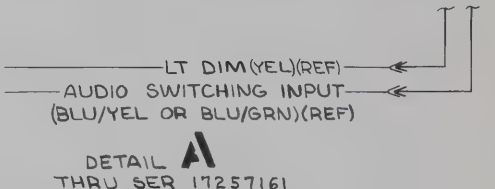

DETAIL A
THRU SER 17257161

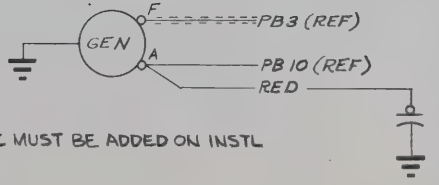

NOTES:
1. CHOKE IN A+ LINE MUST BE ADDED ON INSTL IN ACFT.

ITEM NO	PART NO.	DESCRIPTION	INSTALLED ON
9	0570084-1	JUNCTION BOX ASSY	7.18
8	S-1838-3	CONNECTOR	
7	33827	LOOP CABLE	5.3
6	A-263	CHOKE	
5	28340-1400	RCVR (WITH BFO)	ARC R521A-14
4	S-1360-5	CKT BKR	3.7
3	32680-0000	INDICATOR (ARC IN-521B)	3.7
2	32880-0100	LOOP (ARC L-521B-10)	5.3
1	28340-1500	RCVR (LESS BFO)	ARC R521A-15

EQUIPMENT TABLE

WIRE CODE NO.	GA	MATERIAL	LG	TERMINALS	SHIELD TERMINALS	SERIALS

WIRE TABLE

CESSNA AIRCRAFT CO. COMMERCIAL AIRCRAFT DIVISION, WICHITA, KANSAS

	NAME	DATE
DRAWN	SPRIGGS	6-22-64
GROUP	PARSONS	7-8-64
CHECK	C. Slyck	7-6-64
PROJ	JR Smith	7-8-64

TITLE: WIRING DIAGRAM — CESSNA ADF 300 (ARC TYPE 521B)

Cessna.

DWG NO 0570400

SUPERSEDED BY:	SUPERSEDES PAGE 2-11	MODEL 172	REV B	PAGE 2.21

FORM NO. 80-161

CHG LET	REVISION	BY / DATE	CHK / APPD
A	TITLE WAS KING KN-00 DME; 0582602-0101 WAS KING KN-001 (SR4921)	NC 1-31-66	
B	BY REV: ADD DETAIL A, S-1838-1, 0570084-1, BLUE & YEL WIRES & SER ED & RR 02394 (SR5522) II	LES 9-17-68	JWH MDS

NOTES:
1. ITEMS 6, 7, & 8 ARE SUPPLIED AS PART OF KING INSTL KIT NO. 050-1052-00.

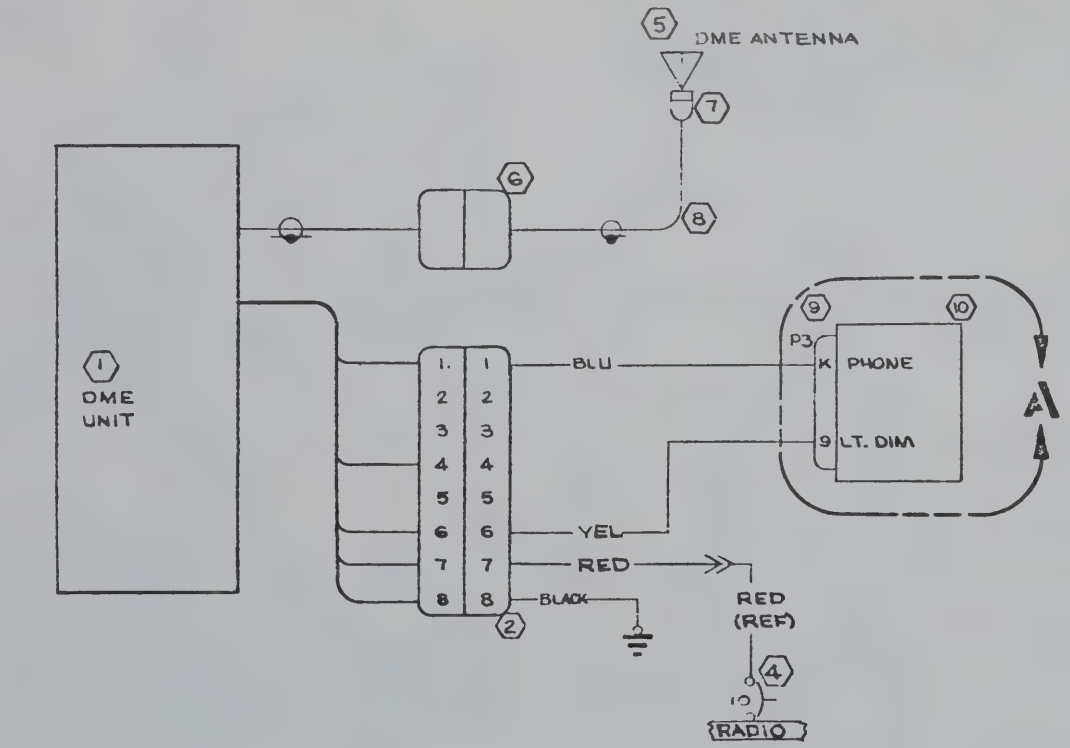

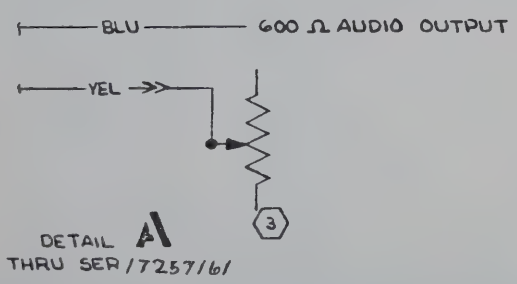

ITEM NO	PART NO.	DESCRIPTION	PAGE
10	0570084-1	JUNCTION BOX	7.18
9	S-1838-3	HOUSING	2.24.0
8	024-0001-00	P.F. CABLE	
7	030-24 00	CONNECTOR RT ANGLE	
6	030-0021-01	CONNECTOR	
5	KA-15	ANTENNA	6.9
4	3-1360-1[illegible]	CIRCUIT BKR	3.14
3	04 3126-5	RHEOSTAT	
2	030-2043-00	CONNECTOR	2.24.0
1	0582602-0101	XCVR-DME	3.14

EQUIPMENT TABLE

WIRE CODE NO	GA	MATERIAL	LG	TERMINALS			SERIALS
BLU	22	-22-6		SOLDER	S-1837-1		SER(SR5522) & ON
YEL	18	-18-4		SOLDER	S-1837-1		SER(SR5522) & ON
BLU	22	-22-6		SOLDER			THRU SER(SR5522)
RED	16	-16-[illegible]			S-341-1		
YEL	8	-18-4			S-341-2		THRU SER(SR5522)
BLACK	6	-16-[illegible]		SOLDER	S-1367-2-8		

WIRE TABLE

	NAME	DATE
DRAWN	BREEN	3-30-64
GROUP	[illegible]	[illegible]
CHECK	[illegible]	[illegible]
PROJ	[illegible]	

TITLE: WIRING DIAGRAM — CESSNA DME 300

Cessna.

DWG NO 0570400

SUPERSEDED BY | SUPERSEDES | MODEL 172 | REV B | PAGE 2.24.1

FORM NO 80-161

NOTES:

1. "PHONE & "LO" FUNCTION TO BE ON KEY WAY SIDE OF SW

REVISION			
LET	DESCRIPTION	DATE	APPD

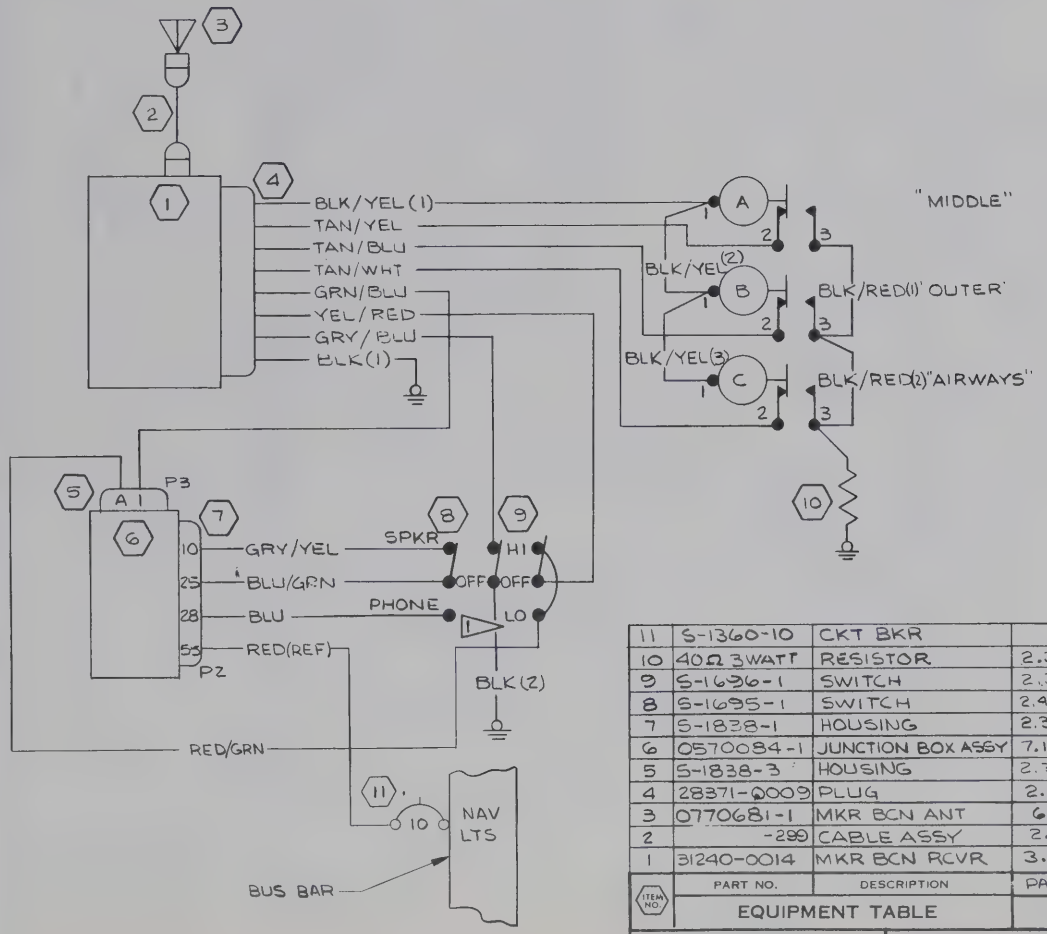

WIRE CODE NO.	GA	MATERIAL	LG	TERMINALS		SERIALS
BLK/RED(2)	22	-22-0-2		SOLDER	SOLDER	
BLK/RED(1)	22	-22-0-2		SOLDER	SOLDER	
YEL/RED	20	-20-4-2		SOLDER	SOLDER	
TAN/YEL	22	-22-10-4			SOLDER	
TAN/WHT	22	-22-10-3			SOLDER	
TAN/BLU	22	-22-10-6			SOLDER	
RED/GRN	22	-22-2-5			S-1837-1	
GRY/YEL	22	-22-8-4			S-1837-1	
GRY/BLU	22	-22-8-6			SOLDER	
GRN/BLU	20	-20-5-6			S-1837-1	
BLU/GRN	22	-22-6-5			S-1837-1	
BLU	22	-22-6			S-1837-1	
BLK/YEL(3)	22	-22-0-4			SOLDER	
BLK/YEL(2)	22	-22-0-4			SOLDER	
BLK/YEL(1)	22	-22-0-4			SOLDER	
BLK(2)	22	-22-0		SOLDER	S-1367-1-8	
BLK(1)	22	-22-0		SOLDER	S-1367-1-8	

WIRE TABLE

ITEM NO.	PART NO.	DESCRIPTION	PAGE
11	S-1360-10	CKT BKR	
10	40Ω 3WATT	RESISTOR	2.30.4
9	S-1696-1	SWITCH	2.30.4
8	S-1695-1	SWITCH	2.40.0
7	S-1838-1	HOUSING	2.30.4
6	0570084-1	JUNCTION BOX ASSY	7.18
5	S-1838-3	HOUSING	2.30.4
4	28371-0009	PLUG	2.30.4
3	0770681-1	MKR BCN ANT	6.9
2	-299	CABLE ASSY	2.30.4
1	31240-0014	MKR BCN RCVR	3.11

EQUIPMENT TABLE

CES-1000 IS APPLICABLE
VENDOR CODES PER S-1400
CES-XXXX=CESSNA SPEC. NO.
S-XXX OR CMXXXX=CESSNA STD. NO.

SUPERSEDES: P 2.30.2

SUPERSEDED BY:

CONTRACT NO:

	NAME	DATE
DESIGN	V R SIPES	10/2/68
GROUP	R. Wise	10-7-68
DRAWN	SCRAPER	9-17-68
CHECK	HARRIS	9-24-68
STRESS		
PROJECT	Lou Moody	10-9-68
APPD	SWANEY	9-27-68

Cessna AIRCRAFT CO.
COMMERCIAL AIRCRAFT DIV.
5800 E. PAWNEE
WICHITA, KANSAS

TITLE
WIRING DIAGRAM —
CESSNA 300 MARKER BEACON
(TYPE 502B)

SIZE	CODE IDENT. NO.	DWG NO.
C	71379	0570400

SCALE: NONE | 172 | PAGE: 2.30.5

FORM NO. 80-215A

ED & RR 02394 (SR5522)

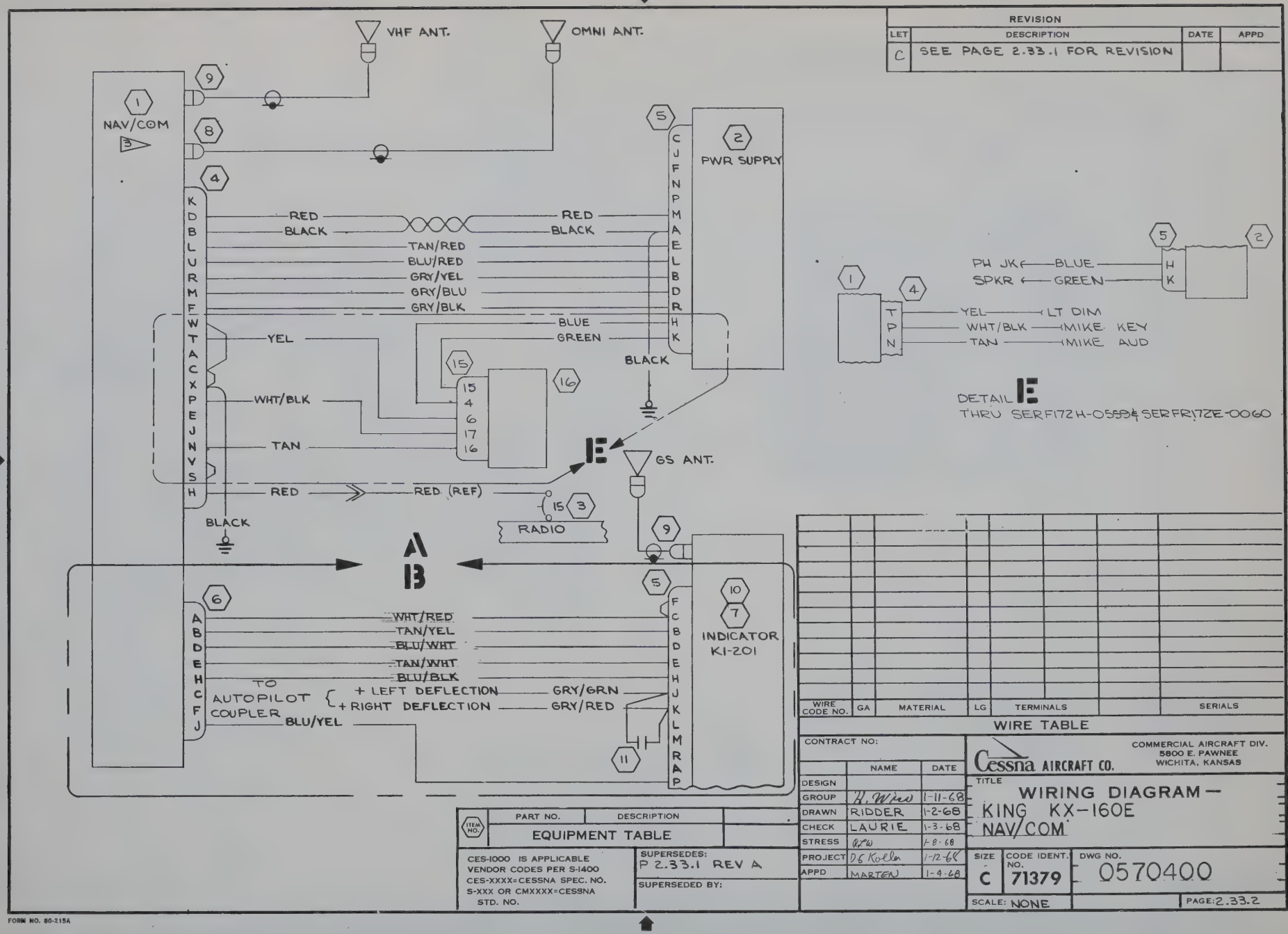

REVISION			
LET	DESCRIPTION	DATE	APPD
C	SEE PAGE 2.33.1 FOR REVISION		

WIRE CODE NO.	GA	MATERIAL	LG	TERMINALS		SERIALS

WIRE TABLE

ITEM NO.	PART NO.	DESCRIPTION
		EQUIPMENT TABLE

CES-1000 IS APPLICABLE
VENDOR CODES PER S-1400
CES-XXXX=CESSNA SPEC. NO.
S-XXX OR CMXXXX=CESSNA
STD. NO.

SUPERSEDES: P 2.33.1 REV A

SUPERSEDED BY:

CONTRACT NO:

	NAME	DATE
DESIGN		
GROUP	H. Wiens	1-11-68
DRAWN	RIDDER	1-2-68
CHECK	LAURIE	1-3-68
STRESS	RTW	1-8-68
PROJECT	D.G. Kolla	1-12-68
APPD	MARTEN	1-9-68

Cessna AIRCRAFT CO.
COMMERCIAL AIRCRAFT DIV.
5800 E. PAWNEE
WICHITA, KANSAS

TITLE
WIRING DIAGRAM —
KING KX-160E
NAV/COM

SIZE	CODE IDENT. NO.	DWG NO.
C	71379	0570400

SCALE: NONE

PAGE: 2.33.2

FORM NO. 80-215A

REVISION			
LET	DESCRIPTION	DATE	APPD
B	SEE PAGE 2.33.1 FOR REVISION		

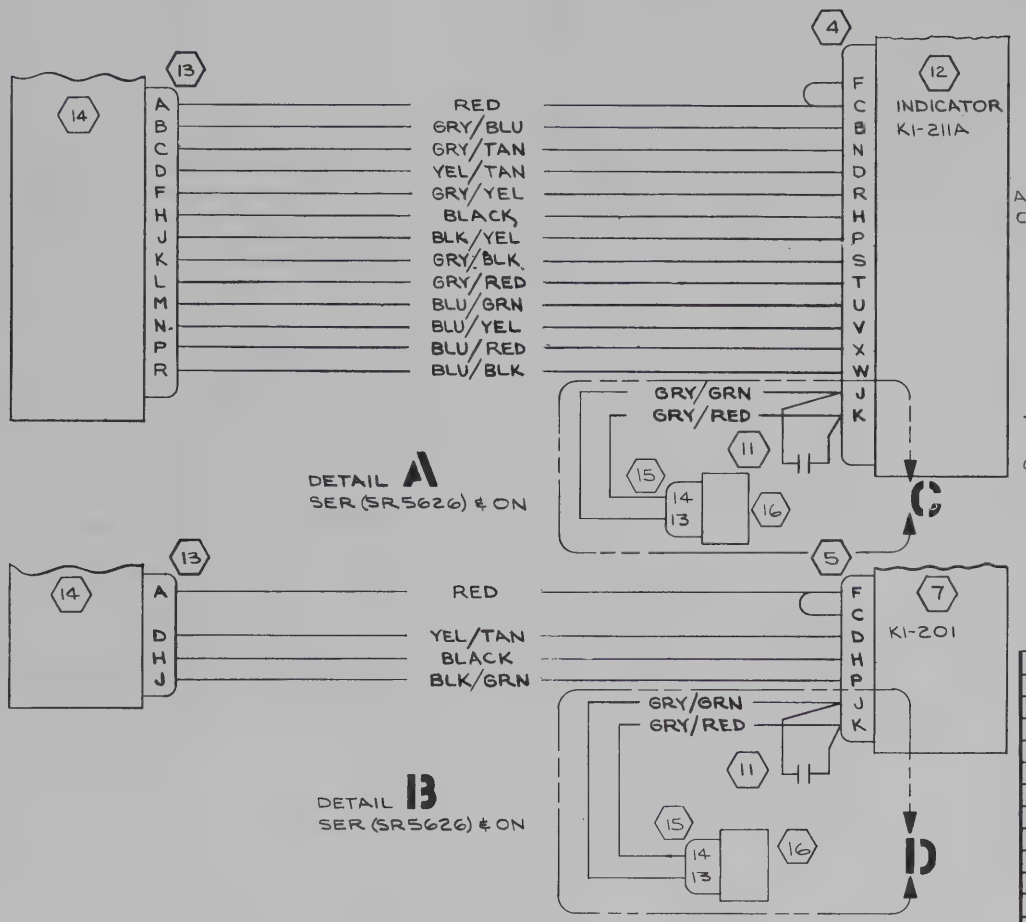

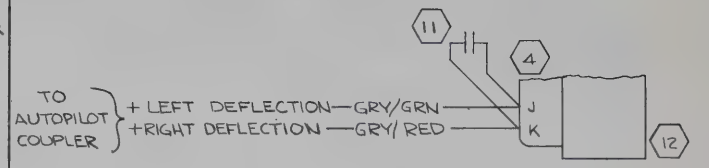

DETAIL C
THRU SER F172H-0559 & SER FR172E-0060

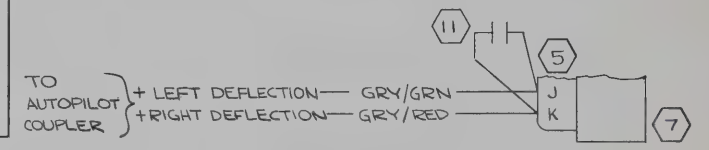

DETAIL D
THRU SER F172H-0559 & SER FR172E-0060

WIRE CODE NO.	GA	MATERIAL	LG	TERMINALS		SERIALS

WIRE TABLE

ITEM NO.	PART NO.	DESCRIPTION
		EQUIPMENT TABLE

CES-1000 IS APPLICABLE
VENDOR CODES PER S-1400
CES-XXXX=CESSNA SPEC. NO.
S-XXX OR CMXXXX=CESSNA
STD. NO.

SUPERSEDES:

SUPERSEDED BY:

CONTRACT NO:

	NAME	DATE
DESIGN		
GROUP	H. Wise	1-11-68
DRAWN	YOUNGERS	1-2-68
CHECK	LAURIE	1-3-68
STRESS	[illegible]	1-8-68
PROJECT	D.G. Koeln	1-12-68
APPD	MARTEN	1-4-68

Cessna AIRCRAFT CO.
COMMERCIAL AIRCRAFT DIV.
5800 E. PAWNEE
WICHITA, KANSAS

TITLE
WIRING DIAGRAM—
KING KX-160E
NAV/COM

SIZE	CODE IDENT. NO.	DWG NO.
C	71379	0570400

SCALE: NONE

FORM NO. 80-215A

REVISION			
LET	DESCRIPTION	DATE	APPD

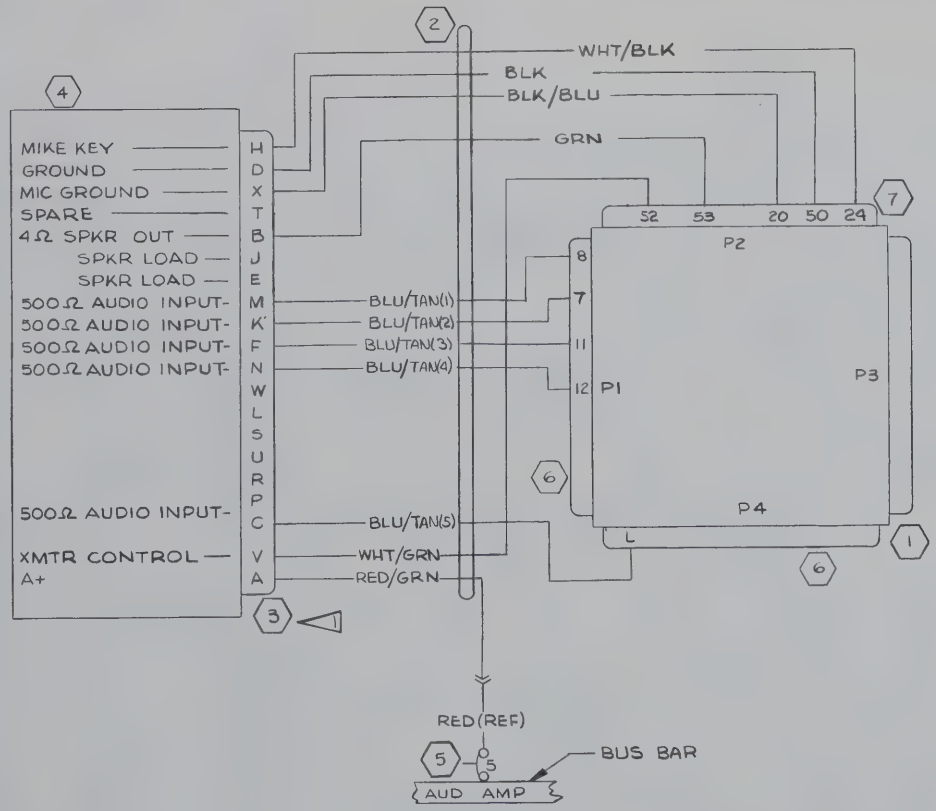

NOTES:

1. CONNECTOR IS FURNISHED WITH KA-25C.

ITEM NO.	PART NO.	DESCRIPTION	PAGE
	EQUIPMENT TABLE		
7	S-1838-1	HOUSING	2.35.2
6	S-1838-2	HOUSING	2.35.2
5	S-1360-5	CIRCUIT BREAKER	3.25
4	KA-25C	AUDIO AMPLIFIER	7.13
3	030-2002-00	PLUG	2.35.2
2	-2000	CABLE ASSY	2.35.2
1	0570084-1	JUNCTION BOX ASSY	7.18

CES-1000 IS APPLICABLE
VENDOR CODES PER S-1400
CES-XXXX=CESSNA SPEC. NO.
S-XXX OR CMXXXX=CESSNA STD. NO.

SUPERSEDES: PG. 2.35.1

SUPERSEDED BY:

WIRE CODE NO.	GA	MATERIAL	LG	TERMINALS		SERIALS
WHT/GRN	22	-22-9-5		S-1367-1-8	SOLDER	
WHT/BLK	22	-22-9-0		S-1837-1	SOLDER	
RED/GRN	20	-20-2-5		S-341-2	SOLDER	
GRN	20	-20-5		S-1837-1	SOLDER	
BLU/TAN5	22	-22-6-10				
BLU/TAN4	22	-22-6-10				
BLU/TAN3	22	-22-6-10				
BLU/TAN2	22	-22-6-10				
BLU/TAN1	22	-22-6-10		S-1837-1	SOLDER	
BLK/BLU	22	-22-0-6			SOLDER	
BLK	18	-18-0		S-1837-1	SOLDER	

WIRE TABLE

CONTRACT NO:

Cessna AIRCRAFT CO.
COMMERCIAL AIRCRAFT DIV.
5800 E. PAWNEE
WICHITA, KANSAS

	NAME	DATE
DESIGN	VR SIPES	10/2/68
GROUP	R. Wise	10-7-68
DRAWN	SCRAPER	9-18-68
CHECK	HARRIS	9-24-68
STRESS	G GUTHRIE	9-28-68
PROJECT	Ed Mosley	10-9-68
APPD	SWANJEY	9-27-68

TITLE
WIRING DIAGRAM — KING KA-25C AUDIO AMPLIFIER

SIZE	CODE IDENT. NO.	DWG NO.
C	71379	0570400

SCALE: NONE | FR172E, 172K | PAGE: 2.35.3

FORM NO. 80-218A

ED&RR 02394 (SR 5608) (SR5522) IX

CHG LET	REVISION	BY / DATE	CHK / APPD
A	BY REV: VOA-9 WAS VOA-5 & TITLE WAS "NARCO UGR-2 GLIDESCOPE WITH NARCO MARK 12A & VOA-5 (ED&RR 00944)(SR5595)	RLY 11-18-67	MDS

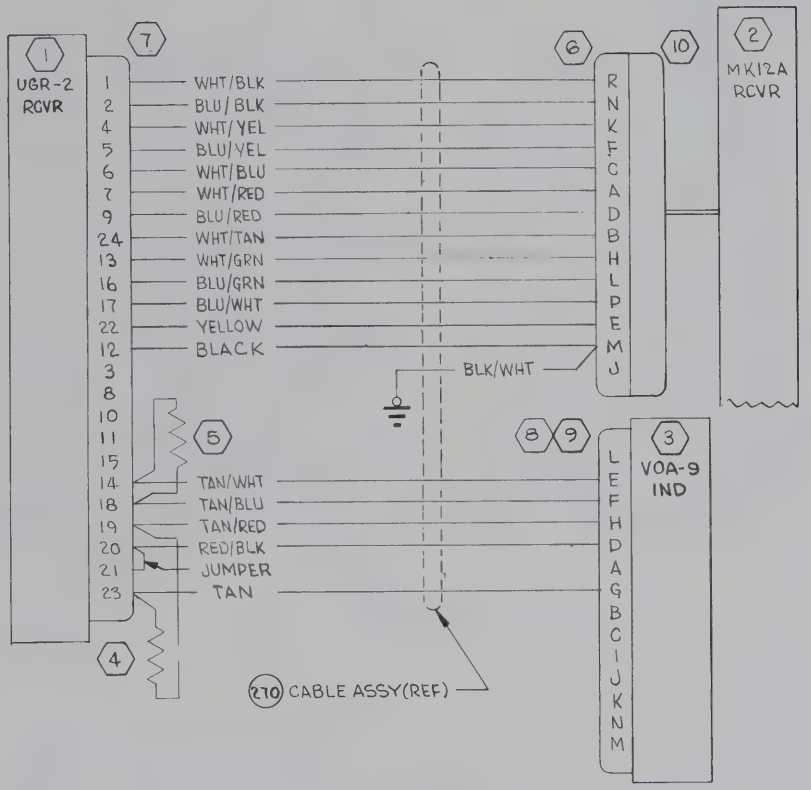

WIRE CODE NO.	GA	MATERIAL	LG	TERMINALS			SERIALS
BLK/WHT	18	-18-0-9		SOLDER	S-1367-1-6		
BLACK	18	-18-0			SOLDER		
YELLOW	18	-18-4					
RED/BLK	18	-18-2-0					
TAN/RED	22	-22-10-2					
TAN/BLU	22	-22-10-6					
TAN/WHT	22	-22-10-9					
BLU/WHT	22	-22-6-9					
BLU/GRN	22	-22-6-5					
BLU/RED	22	-22-6-2					
BLU/YEL	22	-22-6-4					
BLU/BLK	22	-22-6-0					
WHT/TAN	22	-22-9-10					
WHT/GRN	22	-22-9-5					
WHT/RED	22	-22-9-2					
WHT/BLU	22	-22-9-6					
WHT/YEL	22	-22-9-4					
WHT/BLK	22	-22-9-0					
TAN	22	-22-10		SOLDER	SOLDER		

WIRE TABLE

ITEM NO	PART NO.	DESCRIPTION	INSTALLED ON
10	MRA-14S	PIG TAIL(93493)	
9	41228-6	CLAMP(93493)	
8	41223-2	PLUG(93493)	
7	41291-101	CONNECTOR(93493)	
6	41247-102	CONNECTOR(93493)	
5	470Ω, 1/4 WATT	RESISTOR(93493)	
4	1000Ω, 1/4 WATT	RESISTOR(93493)	
3	VOA-9	INDICATOR(93493)	
2	MARK 12A	XCVR(93493)	
1	UGR-2	RCVR(93493)	

EQUIPMENT TABLE

CESSNA AIRCRAFT CO., COMMERCIAL AIRCRAFT DIVISION, WICHITA, KANSAS

	NAME	DATE
DRAWN	W COOK	3-14-67
GROUP	H Wise	3-14-67
CHECK	YAKSHAW	4-1-67
PROJ	J. Latti	4-7-67

TITLE: WIRING DIAGRAM — NARCO UGR-2 GLIDESLOPE WITH NARCO MARK 12A & VOA-9

Cessna.

DWG NO. 0570400

SUPERSEDED BY:

SUPERSEDES 0570400, P 2.17.1

MODEL 172

REV A

PAGE 2.36.1

FORM NO. 80-161 F

CHG LET	REVISION	BY DATE	CHK APPD
A	BY REV R-543B WAS R-543A & TITLE WAS WIRING DIAGRAM-"CESSNA GLIDESLOPE" (ARC TYPE R-543A); 36440-0000 WAS 34340 (ED & RR 00952) (SR5632)	RLY 12-7-67	MDS HW DGK

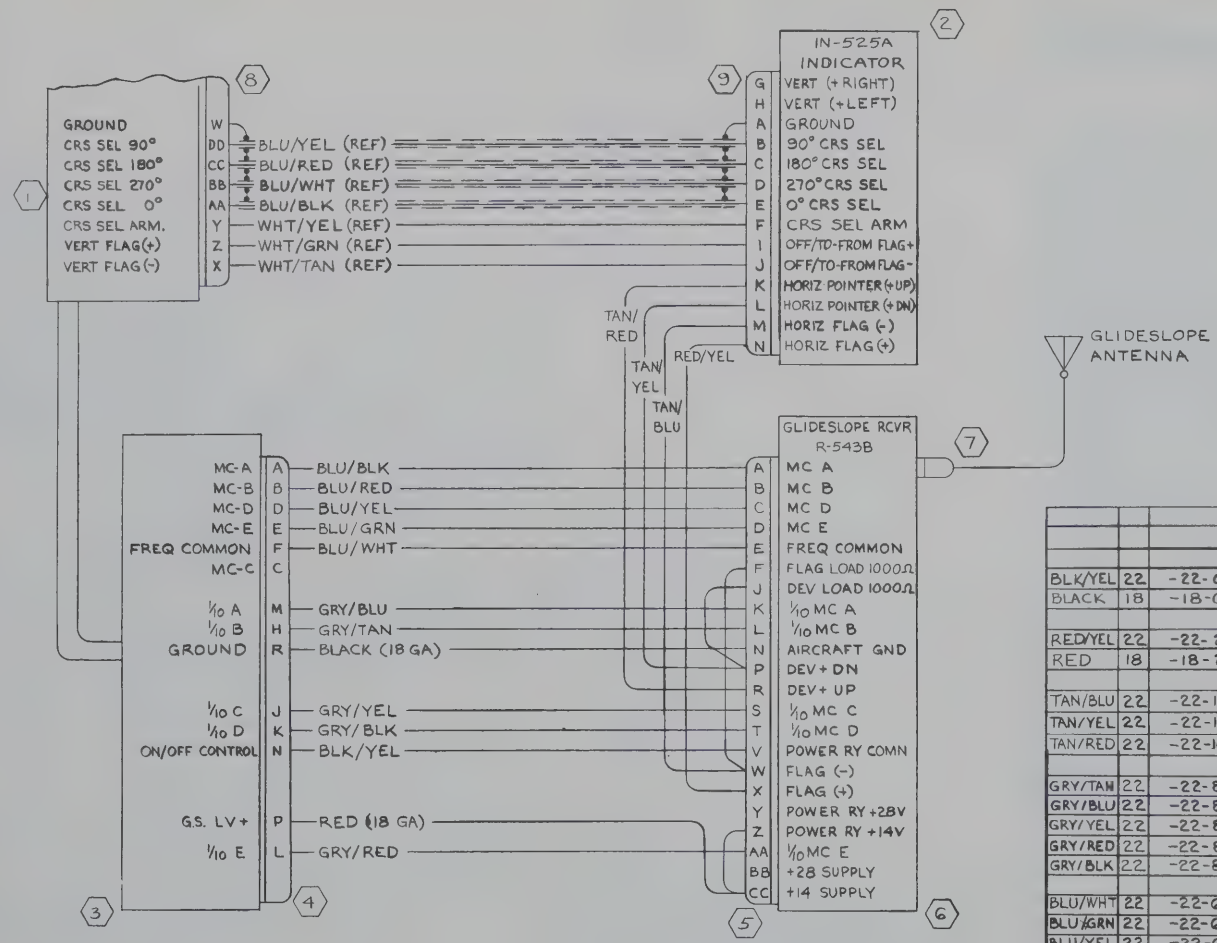

WIRE CODE NO.	GA	MATERIAL	LG	TERMINALS			SERIALS
BLK/YEL	22	-22-0-4		SOLDER	SOLDER		
BLACK	18	-18-0		SOLDER	SOLDER		
RED/YEL	22	-22-2-4		SOLDER	SOLDER		
RED	18	-18-2		↑	↑		
TAN/BLU	22	-22-10-6					
TAN/YEL	22	-22-10-4					
TAN/RED	22	-22-10-2					
GRY/TAN	22	-22-8-10					
GRY/BLU	22	-22-8-6					
GRY/YEL	22	-22-8-4					
GRY/RED	22	-22-8-2					
GRY/BLK	22	-22-8-0					
BLU/WHT	22	-22-6-9					
BLU/GRN	22	-22-6-5					
BLU/YEL	22	-22-6-4					
BLU/RED	22	-22-6-2		↓	↓		
BLU/BLK	22	-22-6-0		SOLDER	SOLDER		

WIRE TABLE

ITEM NO	PART NO.	DESCRIPTION	INSTALLED ON
9	27826	CONNECTOR	
8	29747-0026	CONNECTOR	
7	11337	CONNECTOR	
6	36440-0000	GLIDESLOPE RCVR	(ARC TYPE R-543B)
5	36194	CONNECTOR KIT	
4	36195	CONNECTOR KIT	
3	36300	CABLE HARNESS KIT	
2	32350	INDICATOR (ARC TYPE IN-525A)	
1	36150-1114	RCVR-XMTR (ARC TYPE RT515R-1)	

EQUIPMENT TABLE

CESSNA AIRCRAFT CO. COMMERCIAL AIRCRAFT DIVISION WICHITA, KANSAS

	NAME	DATE
DRAWN	G WOOD	1-23-67
GROUP	N. Wise	1-31-67
CHECK	YAKSHAW	2-1-67
PROJ	[illegible]	2-3-67

TITLE: WIRING DIAGRAM— CESSNA 400 GLIDESLOPE (ARC TYPE R-543B)

Cessna.

DWG NO. 0570400

SUPERSEDED BY:	SUPERSEDES:	MODEL: 172	REV: A	PAGE: 2.37.1

FORM NO 86-161A

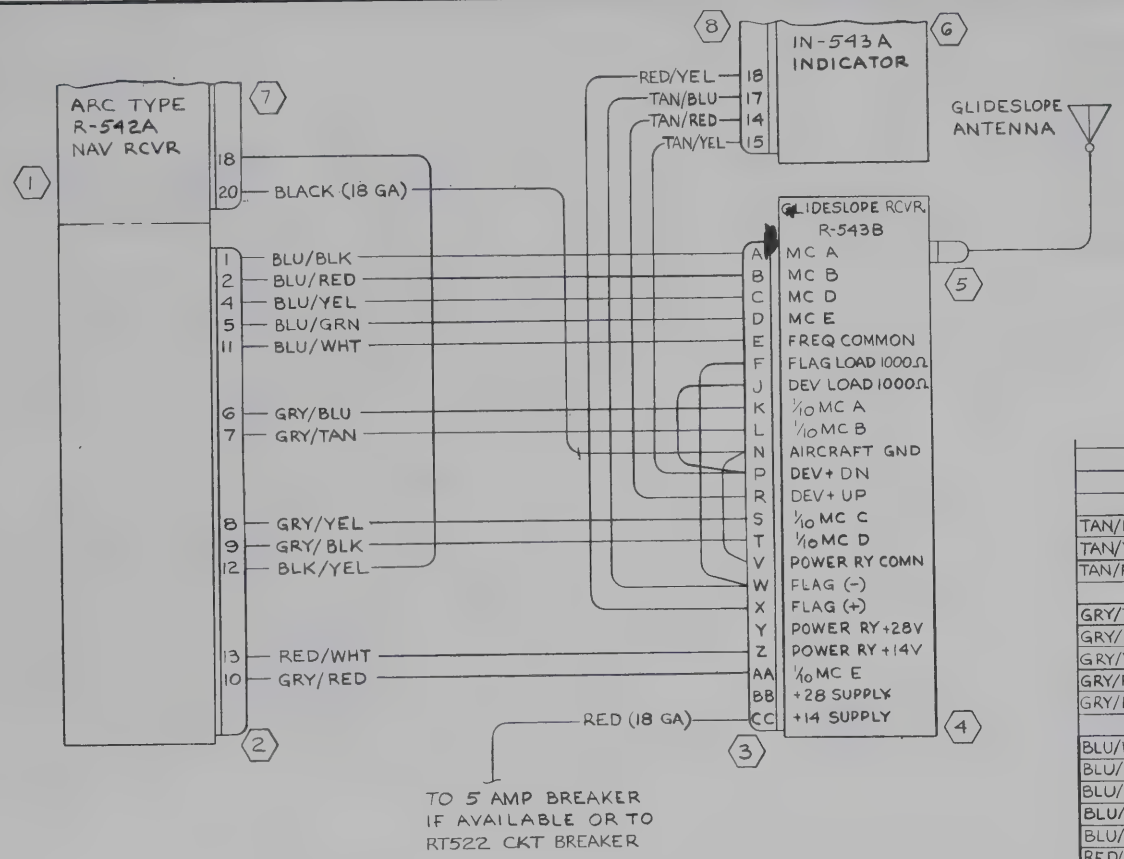

REVISIONS			
LTR	DESCRIPTION	DATE	APPROVED
A	BY REV: R-543B WAS R-543A & TITLE WAS WIRING DIAGRAM-CESSNA GLIDESLOPE (ARC TYPE R-543A); 36440-0000 WAS 34340 (ED&RR 00952) (SR5632)	RLY 12-7-67	MDS

WIRE CODE NO.	GA	MATERIAL	LG	TERMINALS			SERIALS
TAN/BLU	22	-22-10-6		SOLDER	SOLDER		
TAN/YEL	22	-22-10-4		SOLDER	SOLDER		
TAN/RED	22	-22-10-2		SOLDER	SOLDER		
GRY/TAN	22	-22-8-10		SOLDER	SOLDER		
GRY/BLU	22	-22-8-6					
GRY/YEL	22	-22-8-4					
GRY/RED	22	-22-8-2					
GRY/BLK	22	-22-8-0		SOLDER	SOLDER		
BLU/WHT	22	-22-6-9		SOLDER	SOLDER		
BLU/GRN	22	-22-6-5					
BLU/YEL	22	-22-6-4					
BLU/RED	22	-22-6-2					
BLU/BLK	22	-22-6-0					
RED/YEL	22	-22-2-4					
RED/WHT		-22-2-9		SOLDER			
RED	18	-18-2		S-1367-1-8	SOLDER		
BLK/YEL	22	-22-0-4		SOLDER	SOLDER		
BLACK	18	-18-0		SOLDER	SOLDER		

WIRE TABLE

ITEM NO	PART NO.	DESCRIPTION
8	34294-0425	CONNECTOR
7	35693-0004	CONNECTOR
6	34290	INDICATOR (ARC TYPE R-543A)
5	11337	CONNECTOR
4	36440-0000	GS RCVR (ARC TYPE R-543B)
3	36194	CONNECTOR KIT (ARC)
2	35548-0225	CONNECTOR (ARC)
1	33560	NAV RCVR (ARC R-542)

EQUIPMENT TABLE

CONTRACT NO:

	NAME	DATE
DESIGN	G WOOD	1-9-67
GROUP	H. Wise	1-31-67
DRAWN	G WOOD	1-9-67
CHECK	YAKSHAW	2-1-67
STRESS	R.R. Wertzig	2-1-67
PROJECT	J.K. Sattler	2-3-67
APPD		

Cessna AIRCRAFT CO.
COMMERCIAL AIRCRAFT DIV.
5800 E. PAWNEE
WICHITA, KANSAS

TITLE
WIRING DIAGRAM — CESSNA 400 GLIDESLOPE (ARC TYPE R-543B)

SIZE	CODE IDENT. NO.	DWG NO.
C	71379	0570400

SCALE: NONE | 172 | PAGE: 2.38.1

FORM NO. 80-215

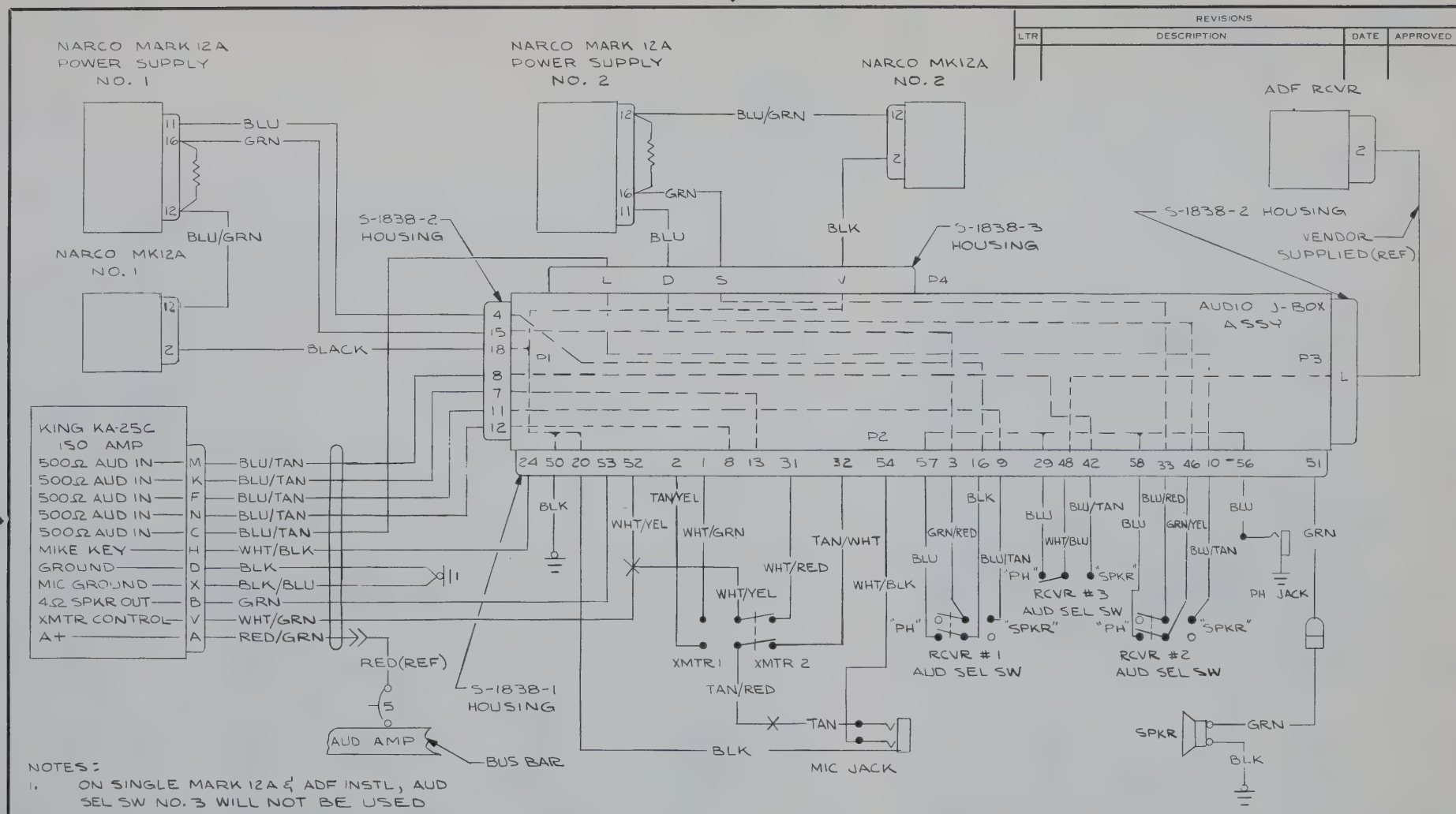

REVISIONS			
LTR	DESCRIPTION	DATE	APPROVED

NOTES:

1. ON SINGLE MARK 12A & ADF INSTL, AUD SEL SW NO. 3 WILL NOT BE USED
2. THIS PAGE IS A REFERENCE PRINT ONLY
3. REFER TO 0570400 PAGE 2.35.3 FOR KING KA-25C ISOLATION AMPLIFIER WIRING DIAGRAM

CONTRACT NO:		
	NAME	DATE
DESIGN	HENSHAW	12-3-68
GROUP	H. Wine	12-5-68
DRAWN	HENSHAW	12-3-68
CHECK	HARRIS	12-3-68
STRESS		
PROJECT	Jud Moody	12-5-68
APPD		

SUPERSEDES: P.2.39.3

Cessna AIRCRAFT CO.
COMMERCIAL AIRCRAFT DIV.
5800 E. PAWNEE
WICHITA, KANSAS

TITLE: WIRING DIAGRAM — TYPICAL SWITCHING, NARCO MARK 12A & ADF

SIZE	CODE IDENT. NO.	DWG NO.
C	71379	0570400

SCALE: NONE | 172 | PAGE: 2.39.3.1

SER17257162

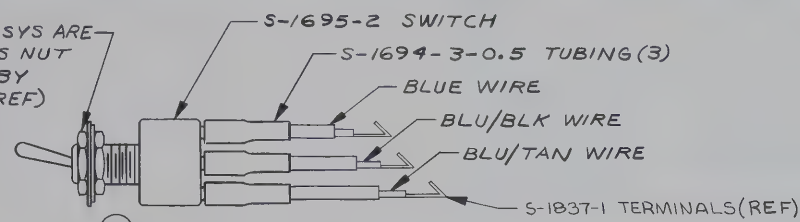

(282) CABLE ASSY-AUDIO SEL SW, COM 1
(283) CABLE ASSY-AUDIO SEL SW, NAV 1
(284) CABLE ASSY-AUDIO SEL SW, COM 2
(285) CABLE ASSY-AUDIO SEL SW, NAV 2
(2003) CABLE ASSY-AUDIO SEL SW, MKR BCN
(2004) CABLE ASSY-AUDIO SEL SW, ADF
(2005) CABLE ASSY-AUDIO SEL SW, DME

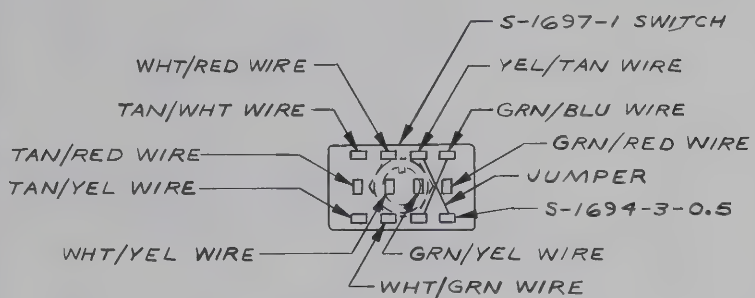

(286) CABLE ASSY-TRANSMITTER SEL (REAR VIEW)

REVISION			
LET	DESCRIPTION	DATE	APPD
A	BY REV: ADD S-1837-1(REF), -2003, -2004, -2005, WIRING PER P2.40.7 & SER; DELETE ALL TERM BD PIN NO. CALL OUTS & NOTES 2&3; COM 1 WAS SW1; NAV 1 WAS SW2; COM 2 WAS SW3; NAV 2 WAS SW4 ED&RR 02394 ED&RR 10070 (SR5608)(SR5522) IX	LES 9-18-68	JWH MDS

NOTES:

1. INSTALL SHRINKABLE TUBING ON ALL SWITCHES AS SHOWN ON AUDIO SELECTOR SWITCH
2. ~~NUMBERS IN PARENTHESES ARE TERMINAL BOARD NUMBERS (0770714-1). NUMBERS TO BE STAMPED ON WIRES PER CES-1015~~
3. ~~WIRE NUMBERS APPLY AS FOLLOWS: -282, (16)(11); -283, (17), (12); -284, (18)(13); -285, (19)(14)~~
4. SWITCHES SHOWN WITH KEYWAY AT TOP
5. ALL WIRES ARE REFERENCE. REFER TO APPLICABLE WIRE DIAGRAM FOR WIRING AND WIRE REQUIREMENTS

2005	2004	2003	286	285	284	283	282	EFFECTIVE SERIALS	PAGE	PART NUMBER	DESCRIPTION
								SER(SR5608)(SR5522)&ON		-2005	CABLE ASSY
								SER(SR5608)(SR5522)&ON		-2004	CABLE ASSY
AR	AR	AR						SER(SR5608)(SR5522)&ON	2.40.7		WIRING
								SER(SR5608)(SR5522)&ON		-2003	CABLE ASSY
			AR						2.40.4		WIRING
				AR	AR	AR	AR		2.40.2		WIRING
			1							S-1697-1	SWITCH
1	1	1		1	1	1	1			S-1695-2	SWITCH
3	3	3	12	3	3	3	3			S-1694-3-0.5	TUBING
										-286	CABLE ASSY
										-285	CABLE ASSY
										-284	CABLE ASSY
										-283	CABLE ASSY
										-282	CABLE ASSY

NO. REQD / NEXT ASSY

LIST OF MATERIAL

DO NOT SCALE PRINT
BREAK ALL SHARP EDGES
A/R = AS REQD
CES-XXXX=CESSNA SPEC. NO.
S-XXX OR CMXXXX=CESSNA STD. NO.
$=APPROX EQUAL SPACES
CES-1000 IS APPLICABLE
VENDOR CODES PER S-1400

UNLESS OTHERWISE SPECIFIED DIMENSIONS ARE IN INCHES
TOLERANCES ARE
DECIMALS .00 ± .03, .000 ± .010; ANGLES MACH ± 0 30', FORMED ± 2°
FOR HOLES, CSINKS, ETC., SEE CES 1012
FOR BASIC CODES SEE NAS 523
BJ-MS20470AD BB-MS20426AD

SUPERSEDES:

SUPERSEDED BY:

CONTRACT NO:

	NAME	DATE
DESIGN	VR SIPES	8/5/68
GROUP	H. Wise	9-30-67
DRAWN	C. GARCIA	9-28-67
CHECK	LAURIE	9-29-67
STRESS		9-30-67
PROJECT	D. C. Koller	9-30-67
APPD	R. C. Moore	9-30-67

Cessna AIRCRAFT CO.
COMMERCIAL AIRCRAFT DIV.
5800 E. PAWNEE
WICHITA, KANSAS

TITLE
CABLE ASSY—AUDIO & XMTR SELECTOR SWITCH

SIZE C | CODE IDENT. NO. 71379 | 0570400

SCALE: 2:1 | FR172E, 172I | PAGE: 2.40.0

FORM NO. 80-221

SER 172E0001 & ON IX ED&RR 00103

REVISION			
LET	DESCRIPTION	DATE	APPD
A	BY REV: DELETE ALL PIN TERM NO. CALL-OUTS & NOTES 1 & 2; COM 1 WAS SW1; COM 2 WAS SW2 ED # RR02394 (SR5608) & (SR5522) IX	LES 9-18-68	JWH MDS

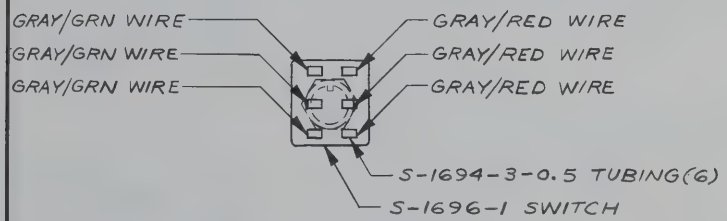

(289) CABLE ASSY - OMNI SELECTOR SWITCH (REAR VIEW)

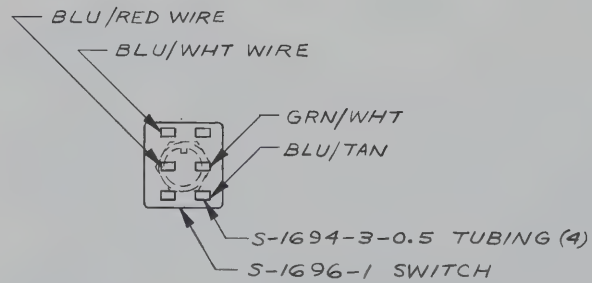

(287) CABLE ASSY - AUDIO SELECTOR SWITCH, COM 1

(288) CABLE ASSY - AUDIO SELECTOR SWITCH, COM 2 (REAR VIEW) (NARCO ONLY)

NOTES:

1. NUMBERS IN PARENTHESES ARE TERMINAL BOARD NUMBERS (0770714-1). NUMBERS TO BE STAMPED ON WIRES PER CES-1015
2. WIRE NUMBERS APPLY AS FOLLOWS: -287, (11), (16), (22), (40); -288, (12), (17), (22), (A1).
3. SWITCHES SHOWN WITH KEYWAY AT TOP
4. ALL WIRES ARE REFERENCE. REFER TO APPLICABLE WIRE DIAGRAM FOR FABRICATION OF WIRES

NO. REQD / NEXT ASSY 289	288	287	EFFECTIVE SERIALS	PAGE	PART NUMBER	DESCRIPTION
A/R				2.90.3		WIRING
	A/R	A/R		2.90.7		WIRING
1	1	1			S-1696-1	SWITCH
6	4	4			S-1694-3-0.5	TUBING
					-289	CABLE ASSY
					-288	CABLE ASSY
					-287	CABLE ASSY

LIST OF MATERIAL

DO NOT SCALE PRINT
BREAK ALL SHARP EDGES
A/R = AS REQD
CES-XXXX=CESSNA SPEC. NO.
S-XXX OR CMXXXX=CESSNA STD. NO.
$=APPROX EQUAL SPACES
CES-1000 IS APPLICABLE VENDOR CODES PER S-1400

UNLESS OTHERWISE SPECIFIED
DIMENSIONS ARE IN INCHES
TOLERANCES ARE
DECIMALS: .00 ±.03, .000 ±.010 | ANGLES: MACH ±.0 30' | FORMED ±2°
FOR HOLES, CSINKS, ETC., SEE CES 1012
FOR BASIC CODES SEE NAS 523
BJ-MS20470AD | BB-MS20426AD

SUPERSEDES:

SUPERSEDED BY:

CONTRACT NO:

	NAME	DATE
DESIGN	VRSIPES	8/19/68
GROUP	A Wise	9-30-67
DRAWN	C. GARCIA	9-28-67
CHECK	LAURIE	9-29-67
STRESS	[illegible]	9-30-67
PROJECT	D G. Kolla	9-30-67
APPD	R.E. Moore	9-30-67

Cessna AIRCRAFT CO.
COMMERCIAL AIRCRAFT DIV.
5800 E. PAWNEE
WICHITA, KANSAS

TITLE
CABLE ASSY-AUDIO & OMNI SELECTOR SWITCH

SIZE	CODE IDENT. NO.	
C	71379	0570400

SCALE: 2:1 | FR172E-172I | PAGE: 2.40.1

FORM NO. 80-221

SER 172E0001 & ON SER 172S6513 & ON IX ED & RR 00103

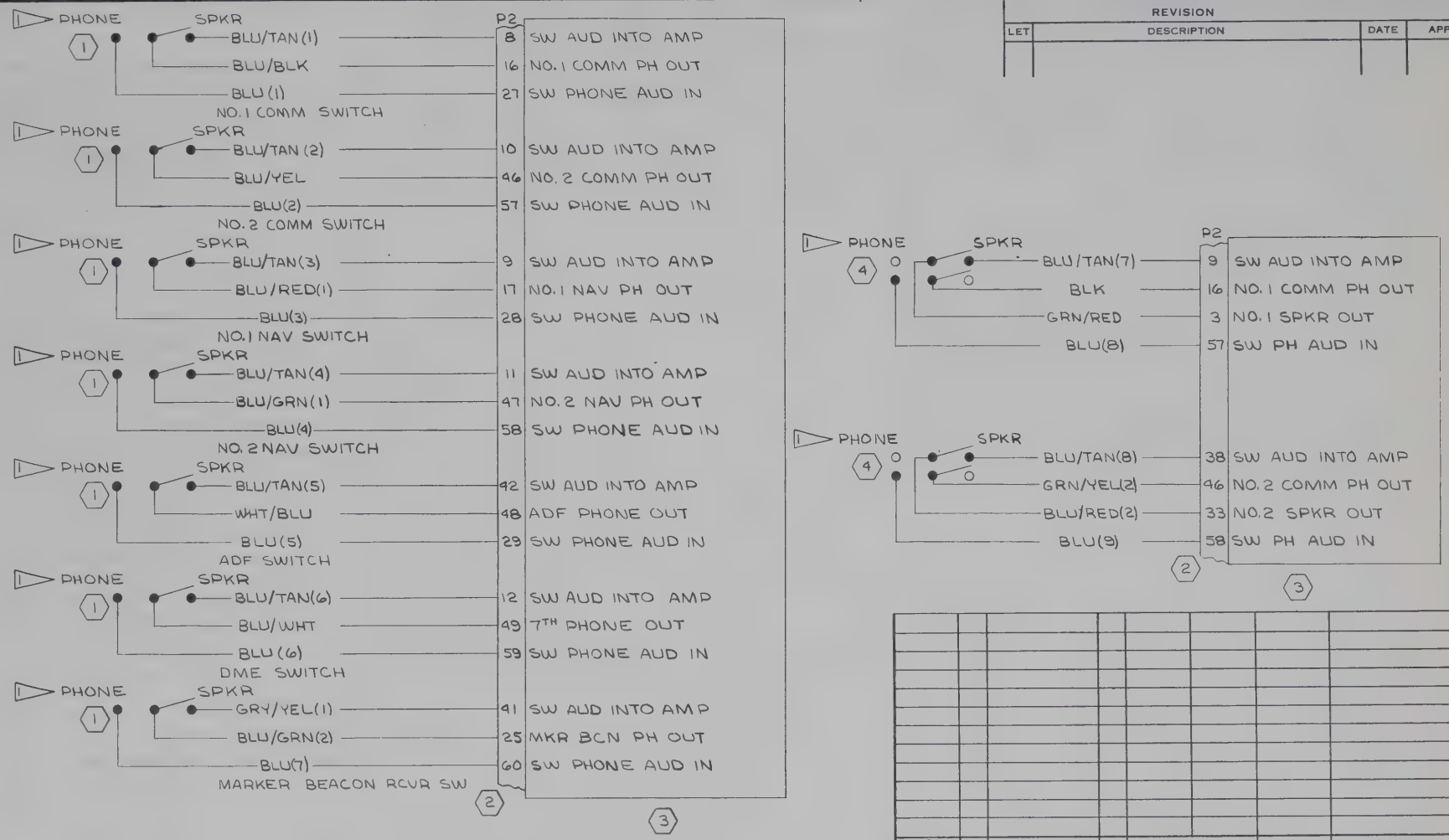

REVISION			
LET	DESCRIPTION	DATE	APPD

WIRE CODE NO.	GA	MATERIAL	LG	TERMINALS		SERIALS

WIRE TABLE

ITEM NO.	PART NO.	DESCRIPTION

EQUIPMENT TABLE

CES-1000 IS APPLICABLE
VENDOR CODES PER S-1400
CES-XXXX=CESSNA SPEC. NO.
S-XXX OR CMXXXX=CESSNA STD. NO.

SUPERSEDES:

SUPERSEDED BY:

CONTRACT NO:

	NAME	DATE
DESIGN	VR SIPES	10/2/68
GROUP	H. Wise	10-7-68
DRAWN	L. SCRAPER	9-18-68
CHECK	HARRIS	9-24-68
STRESS	G. GUTHRIE	9-28-68
PROJECT	[illegible]	10-4-68
APPD	SWANEY	9-27-68

Cessna AIRCRAFT CO.
COMMERCIAL AIRCRAFT DIV.
5800 E. PAWNEE
WICHITA, KANSAS

TITLE
WIRING DIAGRAM — AUDIO SELECTOR SWITCHES

SIZE	CODE IDENT. NO.	DWG NO.
C	71379	0570400

SCALE: NONE | FR172E, 172K | PAGE: 2.40.8

FORM NO 80-215A

ED&RR 02394 (SR5522)(SR5608) II

REVISION			
LET	DESCRIPTION	DATE	APPD

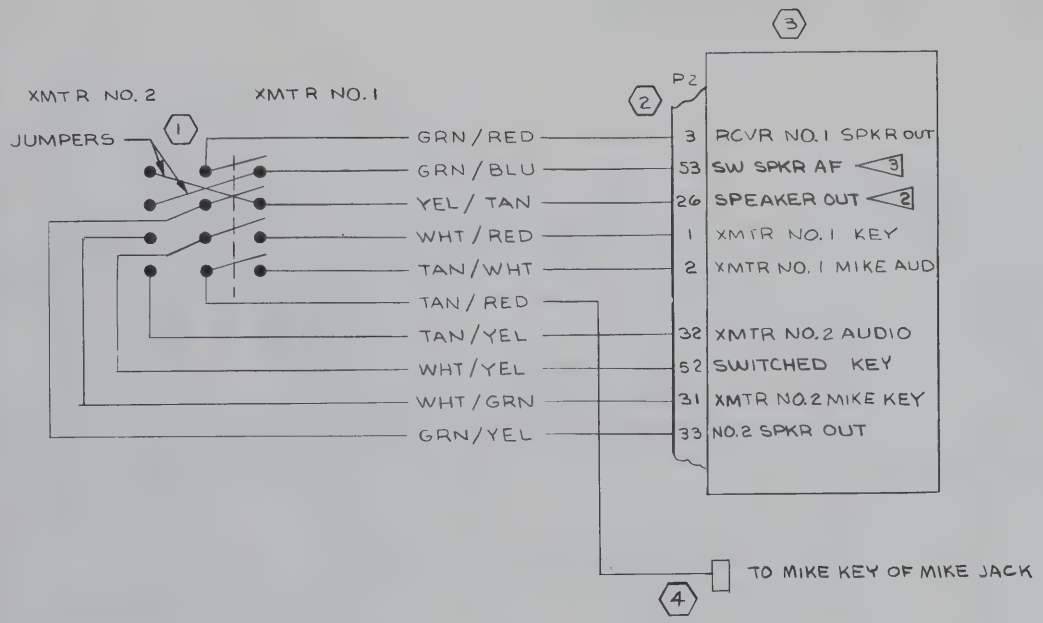

WIRE CODE NO.	GA	MATERIAL	LG	TERMINALS		SERIALS
YEL/TAN	20	20-4-10		SOLDER	S-1837-1	
WHT/YEL	22	22-9-4				
WHT/RED	22	22-9-2				
WHT/GRN	22	22-9-5				
TAN/YEL	22	22-10-4				
TAN/WHT	22	22-10-9				
TAN/RED	22	22-10-2				
GRN/YEL	20	20-5-4				
GRN/RED	20	20-5-2		SOLDER	S-1837-1	
GRN/BLU	20	20-5-6				

WIRE TABLE

NOTES:

1. TRANSMITTER NO. 1 IS ON KEYWAY SIDE OF SWITCH.
2. NO. 26 CONNECTS DIRECTLY TO 10Ω RESISTOR ON PRINTED CIRCUIT BOARD
3. NO. 53 CONNECTS TO RELAY WIPER CONTACTS THEN TO ACFT SPKR THROUGH NO. 51. WHEN RELAY IS ACTUATED, NO. 53 CONNECTS TO 10Ω RESISTOR ON PRINTED CIRCUIT BOARD

ITEM NO.	PART NO.	DESCRIPTION	PAGE
4	S-1637-1	HOUSING	
3	0570084-1	JUNCTION BOX ASSY	7.18
2	S-1831-1	HOUSING	
1	S-1697-1	SWITCH	2.40.0

EQUIPMENT TABLE

CES-1000 IS APPLICABLE
VENDOR CODES PER S-1400
CES-XXXX=CESSNA SPEC. NO.
S-XXX OR CMXXXX=CESSNA STD. NO.

SUPERSEDES: P.2.40.4

SUPERSEDED BY:

CONTRACT NO:

	NAME	DATE
DESIGN	V R SIPES	10/2/68
GROUP	H. Wins	10-7-68
DRAWN	SCRAPER	9-18-68
CHECK	HARRIS	9-25-68
STRESS	G. Guthrie	9-26-68
PROJECT	Joe Woody	10-9-68
APPD	SWANEY	9-27-68

Cessna AIRCRAFT CO.
COMMERCIAL AIRCRAFT DIV.
5800 E. PAWNEE
WICHITA, KANSAS

TITLE
WIRING DIAGRAM — TRANSMITTER SELECTOR SWITCH

SIZE	CODE IDENT. NO.	DWG NO.
C	71379	0570400

SCALE. NONE | FR172E & 172K | PAGE 2.40.9

FORM NO. 80-215A

ED&RA02394 (SR5608) & (SR5522)
II

NOTES:

1. OMNI 2 FUNCTION TO BE ON KEYWAY SIDE OF SWITCH

REVISION			
LET	DESCRIPTION	DATE	APPD

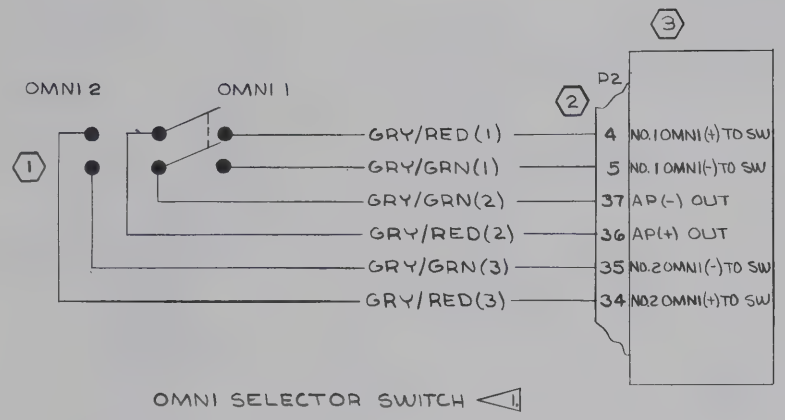

OMNI SELECTOR SWITCH 1

WIRE CODE NO.	GA	MATERIAL	LG	TERMINALS			SERIALS
GRY/RED(3)	22	-22-8-2		SOLDER	S-1837-1		
GRY/RED(2)	22	-22-8-2					
GRY/RED(1)	22	-22-8-2					
GRY/GRN(3)	22	-22-8-5					
GRY/GRN(2)	22	-22-8-5					
GRY/GRN(1)	22	-22-8-5		SOLDER	S-1837-1		

WIRE TABLE

ITEM NO.	PART NO.	DESCRIPTION	PAGE
3	0570084-1	JUNCTION BOX ASSY	7,18
2	S-1838-1	HOUSING	
1	S-1696-1	SWITCH	2.40.0

EQUIPMENT TABLE

CES-1000 IS APPLICABLE
VENDOR CODES PER S-1400
CES-XXXX=CESSNA SPEC. NO.
S-XXX OR CMXXXX=CESSNA STD. NO.

SUPERSEDES: P 2.40.3

SUPERSEDED BY:

CONTRACT NO:

	NAME	DATE
DESIGN	VR SIPES	10/3/68
GROUP	N. Wise	10-9-68
DRAWN	SCRAPER	9-18-68
CHECK	HARRIS	9-24-68
STRESS	G. GUTRIE	9-25-68
PROJECT	[illegible]	10-4-68
APPD	SWANEY	9-27-68

Cessna AIRCRAFT CO.
COMMERCIAL AIRCRAFT DIV.
5800 E. PAWNEE
WICHITA, KANSAS

TITLE
WIRING DIAGRAM — OMNI SELECTOR SWITCH

SIZE	CODE IDENT. NO.	DWG NO.
C	71379	0570400

SCALE: NONE | FR172E, 172K | PAGE: 2.40.10

FORM NO. 80-215A

ED# RR02394 (SR5608) & (SR5522)

LET	DESCRIPTION	DATE	APPD
REVISION			
A	BY REV: PAGE 2.41.1.1 WAS 2.40.1.1 ED&RR 00458	SEM 3-29-68	GKI MDS YCD 7/1W DGL
B	REFER TO PAGE 2.41.1.0		

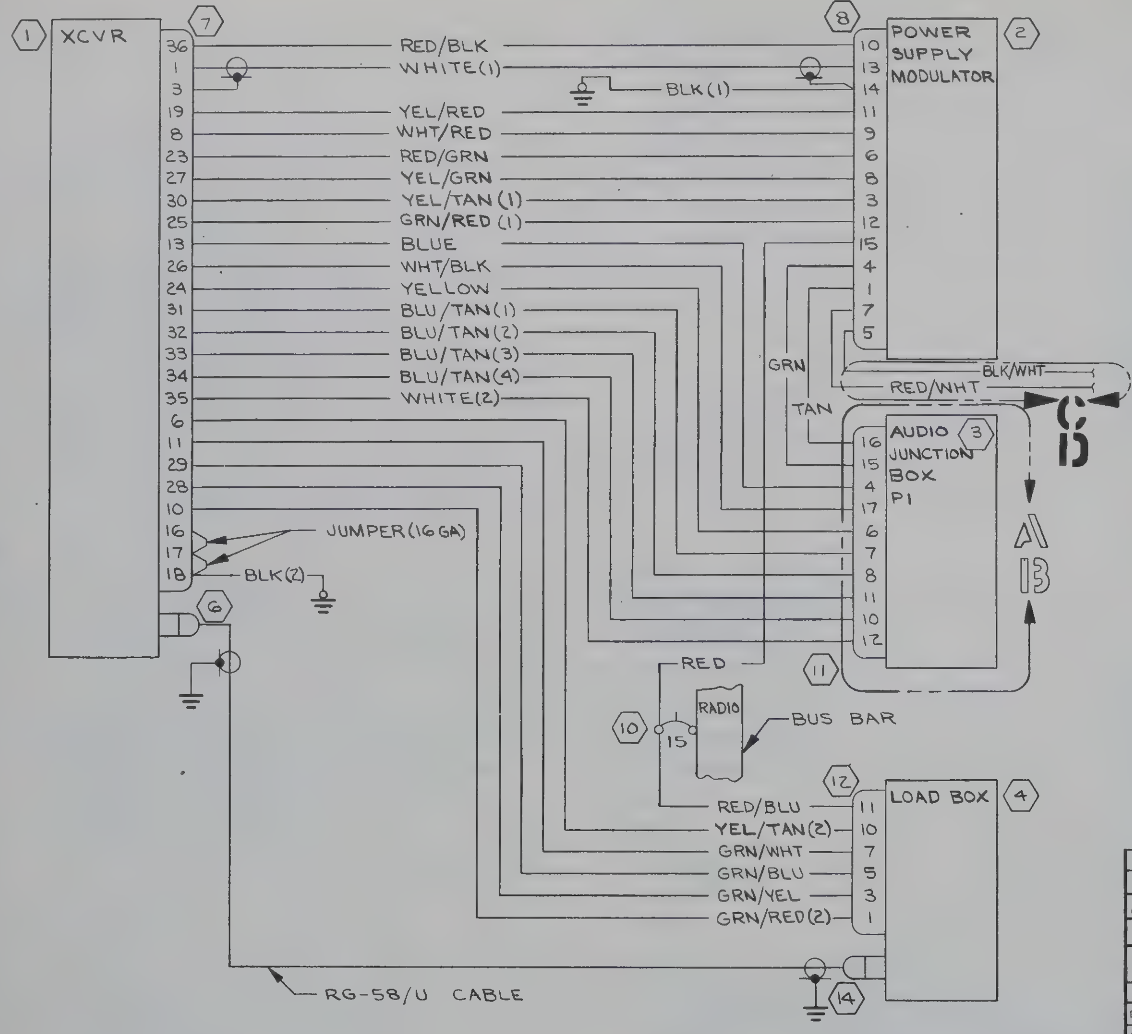

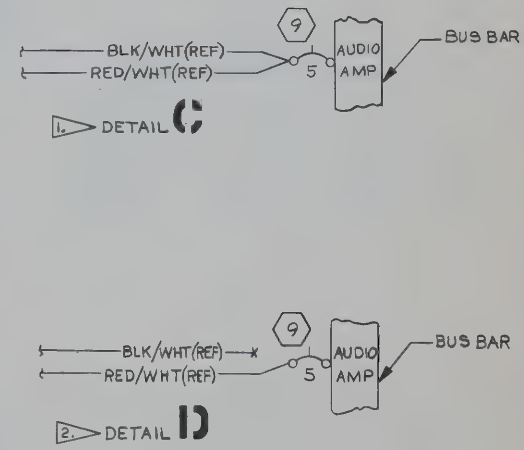

WIRE CODE NO.	GA	MATERIAL	LG	TERMINALS	SERIALS
WIRE TABLE					

CONTRACT NO:

	NAME	DATE
DESIGN	G. Wood	2-29-68
GROUP	H. Wire	2-21-68
DRAWN	C.GARCIA	2-15-68
CHECK	LAURIE RRS	2-17-68
STRESS	Wethington	2-21-68
PROJECT	D.M. Keller	3-1-68
APPD	JSM	2-20-68

Cessna AIRCRAFT CO.
COMMERCIAL AIRCRAFT DIV.
5800 E. PAWNEE
WICHITA, KANSAS

TITLE
WIRING DIAGRAM — CESSNA 300 HF

SIZE	CODE IDENT. NO.	DWG NO.
C	71379	0570400

SCALE: NONE | 172, F172H, FR172E | PAGE: 2.41.1.1

ED&RR 01820

(SR5522)(SR5605)(SR5608) IX

ITEM NO.	PART NO.	DESCRIPTION
EQUIPMENT TABLE		

CES-1000 IS APPLICABLE
VENDOR CODES PER S-1400
CES-XXXX=CESSNA SPEC. NO.
S-XXX OR CMXXXX=CESSNA STD. NO.

SUPERSEDES:

SUPERSEDED BY:

FORM NO. 80-215A

REVISION			
LET	DESCRIPTION	DATE	APPD
A	BY REV: PAGE 2.41.1.2 WAS 2.40.1.2 ED&RR 00458	SEM 3-29-68	GAY MDS HW DGK

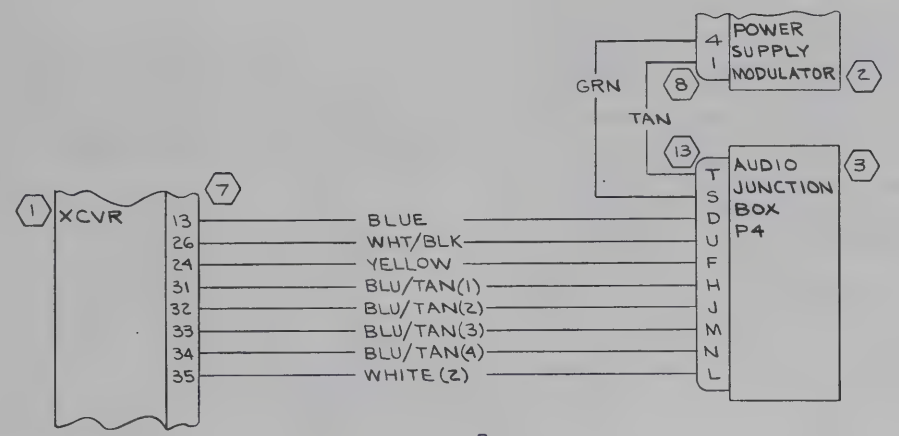

DETAIL A1
2ND INSTL

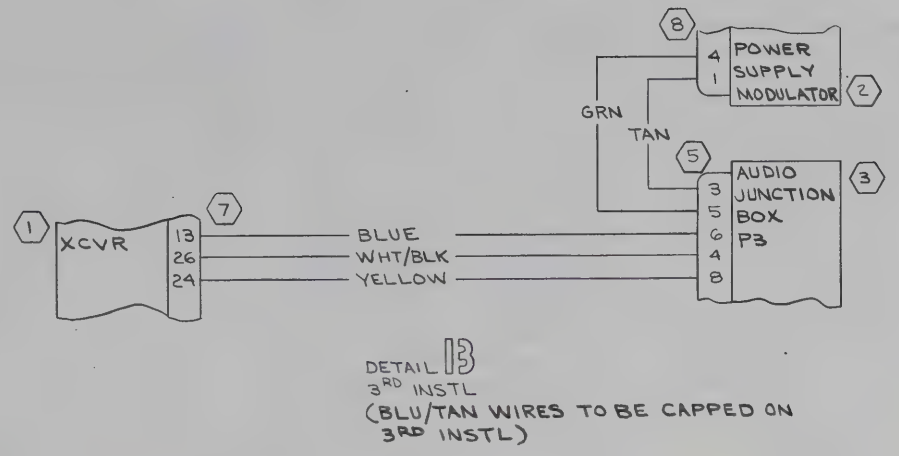

DETAIL B3
3RD INSTL
(BLU/TAN WIRES TO BE CAPPED ON 3RD INSTL)

WIRE CODE NO.	GA	MATERIAL	LG	TERMINALS		SERIALS

WIRE TABLE

ITEM NO.	PART NO.	DESCRIPTION
		EQUIPMENT TABLE

CES-1000 IS APPLICABLE
VENDOR CODES PER S-1400
CES-XXXX=CESSNA SPEC. NO.
S-XXX OR CMXXXX=CESSNA STD. NO.

SUPERSEDES:

SUPERSEDED BY:

CONTRACT NO:

	NAME	DATE
DESIGN	G Wood	2-29-68
GROUP	H. Wild	2-21-68
DRAWN	C. GARCIA	2-15-68
CHECK	LAURIE RMS	2-17-68
STRESS	[illegible]	2-21-68
PROJECT	DJ Keller	3-1-68
APPD	JSM	2-20-68

Cessna AIRCRAFT CO.
COMMERCIAL AIRCRAFT DIV.
5800 E. PAWNEE
WICHITA, KANSAS

TITLE
WIRING DIAGRAM —
CESSNA 300 HF

SIZE	CODE IDENT. NO.	DWG NO.
C	71379	0570400

SCALE: NONE | 172, F172H, FR172E | PAGE: 2.41.1.2

(SR522)(SR560S)(SR560B) IX

FORM NO. 60-215A

ED&RR 01820

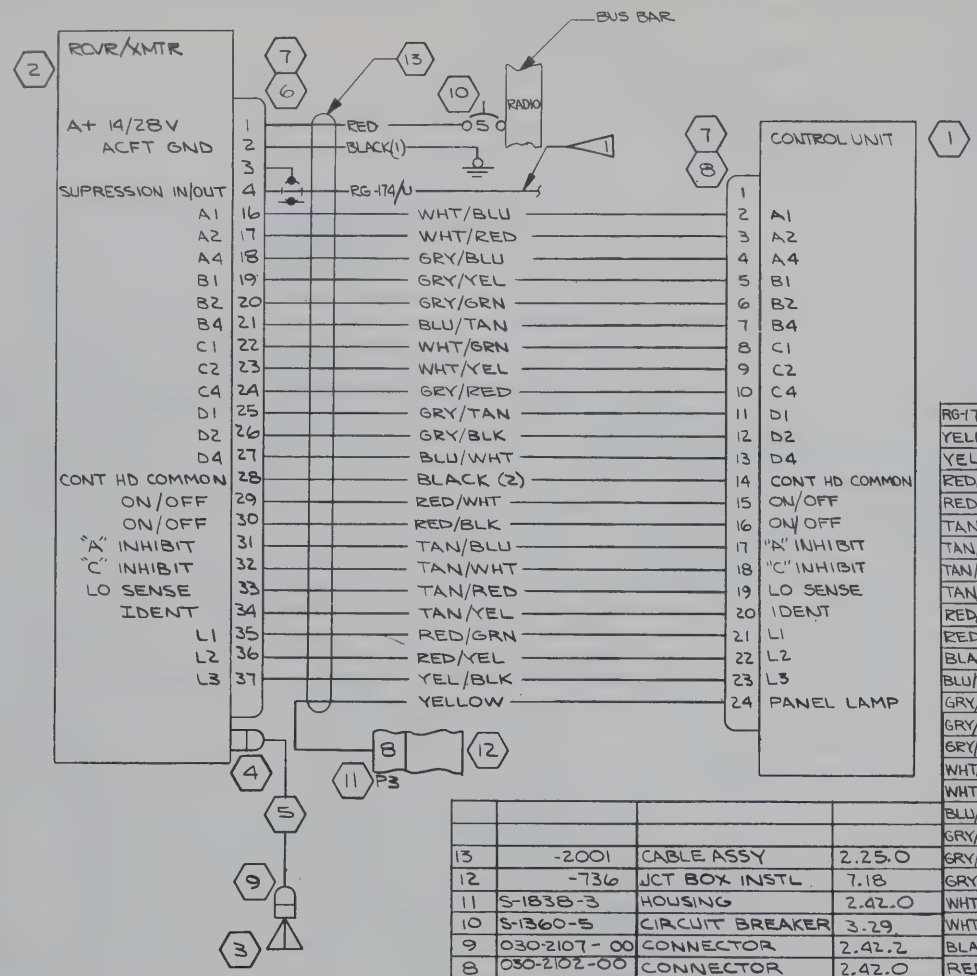

REVISION			
LET	DESCRIPTION	DATE	APPD
A	BY REV: GRY/RED WAS GRY/GRN(2), RED/WHT WAS RED(1), RED/BLK WAS RED(2), RED/YEL WAS YEL/WHT, YELLOW WAS GRY/YEL(2), GRY/YEL WAS GRY/YEL(1), GRY/GRN WAS GRY/GRN(1), RED WAS RED(3) ED&RR 10330 (SR5905)	RLY 11-23-69	JWH MDS RLW

NOTES:

1. SUPRESSOR CABLE ROUTES WITH CABLE TO CONTROL PANEL. CENTER CONDUCTOR CONNECTS TO PIN 4 OF 300 DME CABLE & SHIELD, CONNECTS TO PIN 8. CENTER CONDUCTOR TERMINATED WITH END CAP WHEN NOT USED

ITEM NO.	PART NO.	DESCRIPTION	PAGE
		EQUIPMENT TABLE	
13	-2001	CABLE ASSY	2.25.0
12	-736	JCT BOX INSTL	7.18
11	S-1838-3	HOUSING	2.42.0
10	S-1360-5	CIRCUIT BREAKER	3.29
9	030-2107-00	CONNECTOR	2.42.2
8	030-2102-00	CONNECTOR	2.42.0
7	030-1019-00	CLAMP HALF	3.29 14.15
6	030-2105-00	CONNECTOR	2.42.0
5	-2002	CABLE ASSY	2.42.2
4	030-0060-00	CONNECTOR	2.42.2
3	C589505-0101	ANTENNA	6.15
2	C589504-0101	RCVR/XMTR UNIT 12V	4.15
1	C589503-0101	CONTROL UNIT 12V	3.29

CES-1000 IS APPLICABLE VENDOR CODES PER S-1400
CES-XXXX=CESSNA SPEC. NO.
S-XXX OR CMXXXX=CESSNA STD. NO.

SUPERSEDES:

SUPERSEDED BY:

WIRE CODE NO.	GA	MATERIAL	LG	TERMINALS		SERIALS
RG-174/U		CABLE		SOLDER	◁	
YELLOW	20	-20-4		SOLDER	S-1837-1	
YEL/BLK	22	-22-4-0			SOLDER	
RED/YEL	22	-22-2-4				
RED/GRN	22	-22-2-5				
TAN/YEL	22	-22-10-4				
TAN/RED	22	-22-10-2				
TAN/WHT	22	-22-10-9				
TAN/BLU	22	-22-10-6				
RED/BLK	18	-18-2-0				
RED/WHT	18	-18-2-9				
BLACK(2)	20	-20-0				
BLU/WHT	22	-22-6-9				
GRY/BLK	22	-22-8-0				
GRY/TAN	22	-22-8-10				
GRY/RED	22	-22-8-2				
WHT/YEL	22	-22-9-4				
WHT/GRN	22	-22-9-5				
BLU/TAN	22	-22-6-10				
GRY/GRN	22	-22-8-5				
GRY/YEL	22	-22-8-4				
GRY/BLU	22	-22-8-6				
WHT/RED	22	-22-9-2				
WHT/BLU	22	-22-9-6			SOLDER	
BLACK(1)	18	-18-0			S-1367-2-8	
RED	18	-18-2		SOLDER	S-1367-2-8	

WIRE TABLE

CONTRACT NO:

	NAME	DATE
DESIGN	V R SIPES	8/9/68
GROUP	R. Wise	11-12-68
DRAWN	YOUNGERS	10-29-68
CHECK	HARRIS	11-5-68
STRESS	Wetzington	11-11-68
PROJECT	Ed Moody	11-15-68
APPD	SWANEY	11-7-68

Cessna AIRCRAFT CO.
COMMERCIAL AIRCRAFT DIV.
5800 E. PAWNEE
WICHITA, KANSAS

TITLE
WIRING DIAGRAM — CESSNA 300 TRANSPONDER

SIZE C | CODE IDENT. NO. 71379 | DWG NO. 0570400

SCALE: NONE | 172 | PAGE: 2.42.1

FORM NO. 80-218A

ED&RR 10045 (SR5905)

(414939) TR

CHG LET	REVISION	BY DATE	CHK APPD

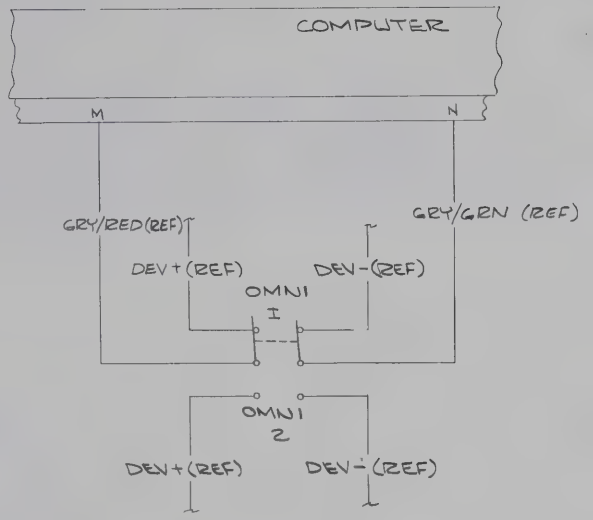

WIRE CODE NO.	GA	MATERIAL	LG	TERMINALS		SERIALS

WIRE TABLE

ITEM NO.	PART NO.	DESCRIPTION	INSTALLED ON

EQUIPMENT TABLE

CESSNA AIRCRAFT CO., COMMERCIAL AIRCRAFT DIVISION, WICHITA, KANSAS

	NAME	DATE
DRAWN	LONNSON	11/15/63
GROUP	PARSONS	1-21-64
CHECK	R. Stuck	11-21-63
PROJ	JR Settle	2-4-64

TITLE: WIRING DIAGRAM — OMNI SELECTOR SWITCH (OPT)

Cessna.

DWG NO: 0500062

SUPERSEDED BY:	SUPERSEDES:	MODEL: 172-P172	REV	PAGE: 14.3

FORM NO. 80-161

REVISION			
LET	DESCRIPTION	DATE	APPD
	SEE PAGE 14.8.0 FOR REVISIONS		

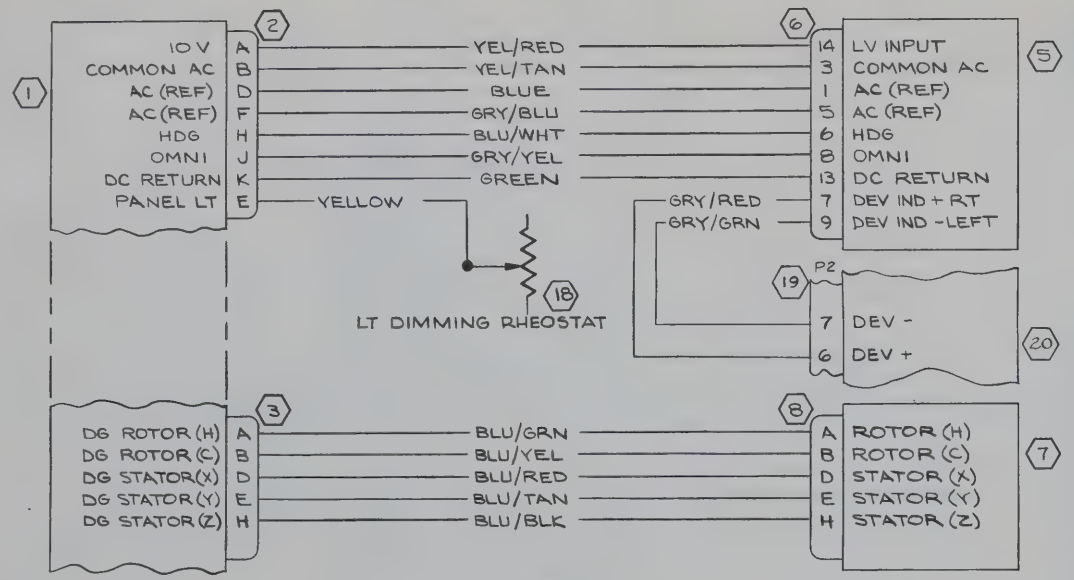

WIRE CODE NO.	GA	MATERIAL	LG	TERMINALS		SERIALS

WIRE TABLE

ITEM NO.	PART NO.	DESCRIPTION

EQUIPMENT TABLE

CES-1000 IS APPLICABLE
VENDOR CODES PER S-1400
CES-XXXX=CESSNA SPEC. NO.
S-XXX OR CMXXXX=CESSNA
STD. NO.

SUPERSEDES: P 14.1

SUPERSEDED BY:

CONTRACT NO:

	NAME	DATE
DESIGN	LAURIE	
GROUP	R. Wiel	5-24-68
DRAWN	YOUNGERS	5-7-68
CHECK	G IRVIN	5-10-68
STRESS	RJD	5-23-68
PROJECT	DG Koller	5-27-68
APPD	SWANEY	5-10-68

Cessna AIRCRAFT CO.
COMMERCIAL AIRCRAFT DIV.
5800 E. PAWNEE
WICHITA, KANSAS

TITLE
WIRING DIAGRAM —
CESSNA 300 NAV-O-MATIC
AUTOPILOT (14VOLT)

SIZE	CODE IDENT. NO.	DWG NO.
C	71379	0500062

SCALE: NONE | 172 | PAGE: 14.8.1

FORM NO. 80-215A

EDERR 02325 (SR5751)

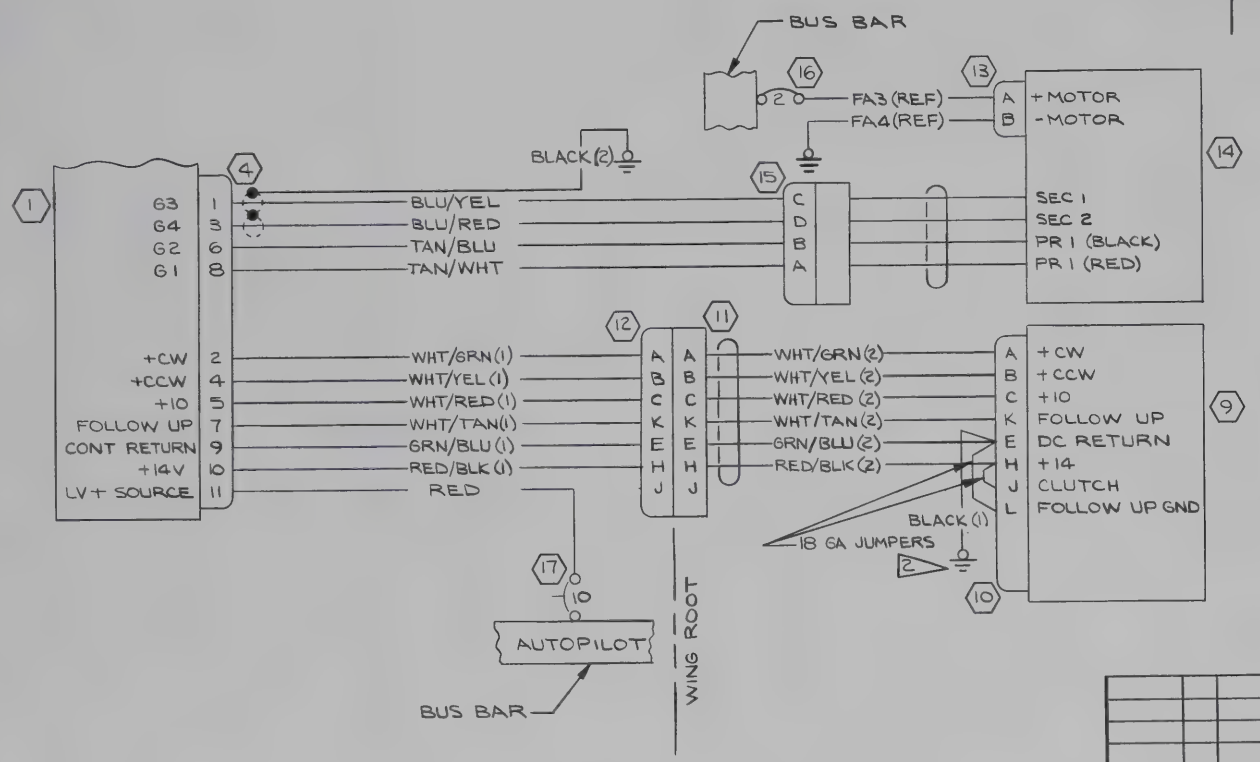

REVISION			
LET	DESCRIPTION	DATE	APPD

WIRE CODE NO.	GA	MATERIAL	LG	TERMINALS		SERIALS

WIRE TABLE

ITEM NO.	PART NO.	DESCRIPTION

EQUIPMENT TABLE

CES-1000 IS APPLICABLE
VENDOR CODES PER S-1400
CES-XXXX=CESSNA SPEC. NO.
S-XXX OR CMXXXX=CESSNA STD. NO.

SUPERSEDES: P 14.1

SUPERSEDED BY:

CONTRACT NO:

	NAME	DATE
DESIGN	LAURIE	
GROUP	R Wine	5-24-68
DRAWN	YOUNGERS	5-7-68
CHECK	G IRVIN	5-10-68
STRESS	R2W	5-23-69
PROJECT	DGKorba	5-27-68
APPD	SWANEY	5-10-68

Cessna AIRCRAFT CO.
COMMERCIAL AIRCRAFT DIV.
5800 E. PAWNEE
WICHITA, KANSAS

TITLE
WIRING DIAGRAM —
CESSNA 300 NAV-O-MATIC
AUTOPILOT (14VOLT)

SIZE	CODE IDENT. NO.	DWG NO.
C	71379	0500062

SCALE: NONE | 172 | PAGE: 14.8.2

FORM NO. 80-215A

FDERR 02325 (SR5751)

TABLE OF CONTENTS

177 SERIAL 17701165 & ON

PAGE NO.	TITLE	DATE ISSUED	REV
2.1	W. D. - Radio Speaker, Phone Jack, Mike, Light Rheo, and Power Circuits	10-16-68	F
2.1.1	S. D. - Audio Junction Box, Internal Wiring	3-7-69	NC
2.6.0	Cable Assy - Audio, Omni & Xmtr Selector Switches	10-19-68	C
2.6.2.1	W. D. - Transmitter Selector Switch	10-16-68	C
2.6.3.1	W. D. - Audio Selector Switch	10-16-68	C
2.6.4	W. D. - Omni Audio Xmtr Switch	7-1-68	B
2.7.1.1	W. D. - Cessna 300 Nav/Com (Type 540A, 517R with IN-525A & IN-514)	10-28-68	A
2.7.1.2	W. D. - Cessna 300 Nav/Com (Type 540A, 517R with IN-525A & IN-514)	10-28-68	A
2.8	W. D. - Cessna 300 ADF (ARC Type 521A)	4-30-68	A
2.9.1	W. D. - Cessna 300 Comm (ARC Type 524A)	10-16-68	B
2.10.1	W. D. - Cessna 300 DME	4-30-68	A
2.11.1.1	W. D. - Cessna 300 Marker Beacon (Type 502B)	10-16-68	A
2.13.1	W. D. - Cessna 400 Glideslope (ARC Type R-543B)	10-28-68	B
2.15.2	W. D. - Narco Mark 12 with VOA-8 & VOA-9	8-2-68	NC
2.15.4	W. D. - Narco Mark 12 with VOA-8 & VOA-9	8-2-68	NC
2.17.1	W. D. - King KY-95E	8-9-67	NC
2.18.1	W. D. - King KX-160E Nav/Com	8-9-67	NC
2.20.3	W. D. - King KA-25C Audio Amplifier	10-16-68	B
2.21.2	W. D. - Typical Switching, Narco Mark 12 A & ADF	12-5-68	A-Inac
2.21.2.1	W. D. - Typical Switching, Narco Mark 12A & ADF	12-5-68	NC
2.23.1.1	W. D. - Cessna 300 HF	3-6-68	NC
2.23.1.2	W. D. - Cessna 300 HF	3-6-68	NC
2.24.1	W. D. - Narco UGR-2 Glideslope with Narco Mark 12A & VOA-9	4-30-68	NC

TABLE OF CONTENTS

PAGE NO.	TITLE	DATE ISSUED	REV
2.25.1	W. D. - Cessna 300 Transponder	2-3-69	A
	DRAWING NUMBER 1770001		
14.4.1	W. D. - Cessna 300 NAV-O-Matic Autopilot (14-Volt)	7-22-68	A
14.4.2	W. D. - Cessna 300 NAV-O-Matic Autopilot (14-Volt)	6-6-68	NC

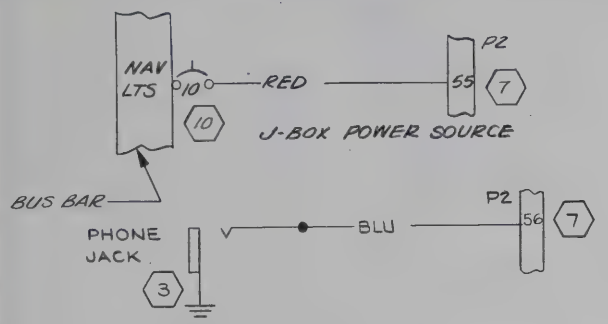

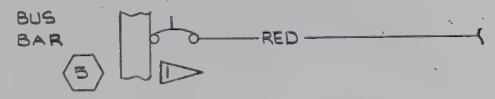

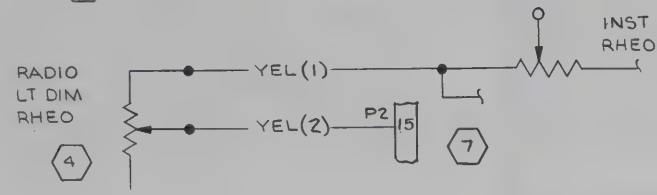

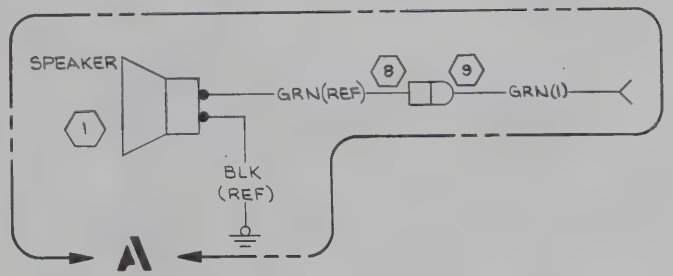

TAN — TO TAN/RED OF MIC SEC SW

DETAIL B
THRU SER1770164

NOTES:

1. AMP RATING OF S-1360 CKT BKR TO BE DETERMINED BY INSTL.
2. ~~S-1635-3 PIN & S-1637-1 HOUSING-CAP~~
3. ~~S-1635-1 PIN & S-1637-1 HOUSING/CAP~~
4. WIRES TO BE OF SUFFICIENT LENGTH TO ALLOW CONNECTION TO ALL POSSIBLE RADIO COMBINATION. TERMINALS TO ATTACHED TO WIRES AS REQD BY THE VARIOUS RADIO INSTALLATIONS

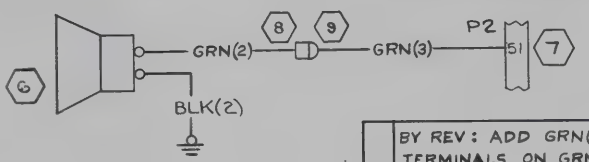

DETAIL A
SER 1770165 & ON

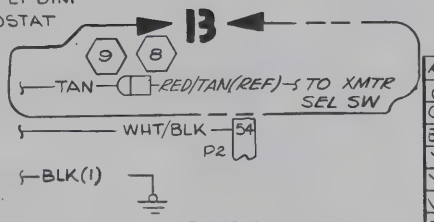

DUAL XCVR INSTL

REVISIONS			
LTR	DESCRIPTION	DATE	APPROVED
A	BY REV: ADD DETAIL A & SER, GRN(2) WIRE & SER, BLK(2) WIRE & SER; BLK(1) WAS BLK; ADD C596505-0101, GRN(1) WAS GRN ED&RR 01347 (SR 5440) IX	C.G. 1-22-68	RLL LWJ DET NRW TM
B	BY REV: ADD S-1838-1, S-1837-1 WAS SOLDER, S-1837-1 WAS S-1829-1, S-1837-1 WAS NOTE 4. ED&RR 01831 (SR 5440) IX	JWH 4/22/68	GKI MDS DET NRW VRS TM
C	BY REV: 26 WAS 56, 21 WAS 51, 45 WAS 15, 32 WAS 2, 31 WAS 1; C596505-0101 WAS C596504-0101 ED&RR 02371	SEM 5-23-68	GKI MDS DET NRW VRS TM
D	BY REV: 56 WAS 26, 51 WAS 21, 15 WAS 45, 2 WAS 32, 1 WAS 31; ADD DETAIL B & SER ED & RR 03406 (SR 5440)	EGY 6-19-68	GKI MDS AL TM NRW
E	BY REV: ADD GRN(3) & S-1637(-1 & -2); TERMINALS ON GRN (2) WERE CHANGED TO AGREE; PIN 54 WAS PIN 1 ON SINGLE XCVR INSTL; DELETE NOTES 2 & 3 ED & RR 10037 (SR5440) IX	RBI 8-26-68	GKI MDS DET NRW VRS GW TM
F	BY REV: ADD DETAIL C & J-BOX POWER SOURCE ED&RR 10156 SER 1770165	EGY 10-3-68	JWH MDS DET NRW TM

WIRE CODE NO.	GA	MATERIAL	LG	TERMINALS		SERIALS
RED	18	-18-2		S-1367-26	S-1837-1	SER1770116 5 & ON
GRN (3)	20	-20-5		S-1837-1	S-1636-1	
GRN (2)	20	-20-5		S-1635-1	S-1829-1	SER1770116 5 & ON
BLK (2)	22	-22-0		S-1829-1	S-1367-1-8	SER1770116 5 & ON
YEL (2)	18	-18-4		SOLDER	S-1837-1	SER1770116 5 & ON
YEL (1)	18	-18-4		SOLDER	A	
WHT/BLK	22	-22-9-0		S-1837-1	SOLDER	SER1770116 5 & ON
TAN	22	-22-10		S-1837-1	SOLDER	SER1770116 5 & ON
RED	16	-16-2		9	S-1367-26	
GRN (1)	20	-20-5		S-1636-1	S-391-2	THRU SER1770116 4
BLUE	22	-22-6		S-1837-1	SOLDER	SER1770116 5 & ON
BLK (1)	22	-22-0		9	SOLDER	

WIRE TABLE

ITEM NO.	PART NO.	DESCRIPTION
10	S-1360-10	CKT BKR
9	S-1637-2	HOUSING - PLUG
8	S-1637-1	HOUSING - CAP
7	S-1838-1	CONNECTOR
6	C596505-0101	SPEAKER
5	S-1360	CIRCUIT BKR
4	0413126-5	RHEOSTAT
3	S-1612-1	PHONE JACK
2	S-1102-1	MIKE JACK
1	0770731-2	SPEAKER, 4 Ω

EQUIPMENT TABLE

CONTRACT NO:

	NAME	DATE
DESIGN	SIPES V.R.	5-8-67
GROUP	H. WISE	5-8-67
DRAWN	SIPES V.R.	5-8-67
CHECK	YAKSHAW	6-26-67
STRESS		
PROJECT	TED MOODY	5-8-67
APPD		

Cessna AIRCRAFT CO.
COMMERCIAL AIRCRAFT DIV.
5800 E. PAWNEE
WICHITA, KANSAS

TITLE
WIRING DIAGRAM — RADIO SPEAKER, PHONE JACK, MIKE, LIGHT RHEO & POWER CIRCUITS

SIZE	CODE IDENT. NO.	DWG NO.
C	71379	1770000

SCALE: NONE | SER 1770000 1 & ON | PAGE: 2.1

FORM NO. 80-215

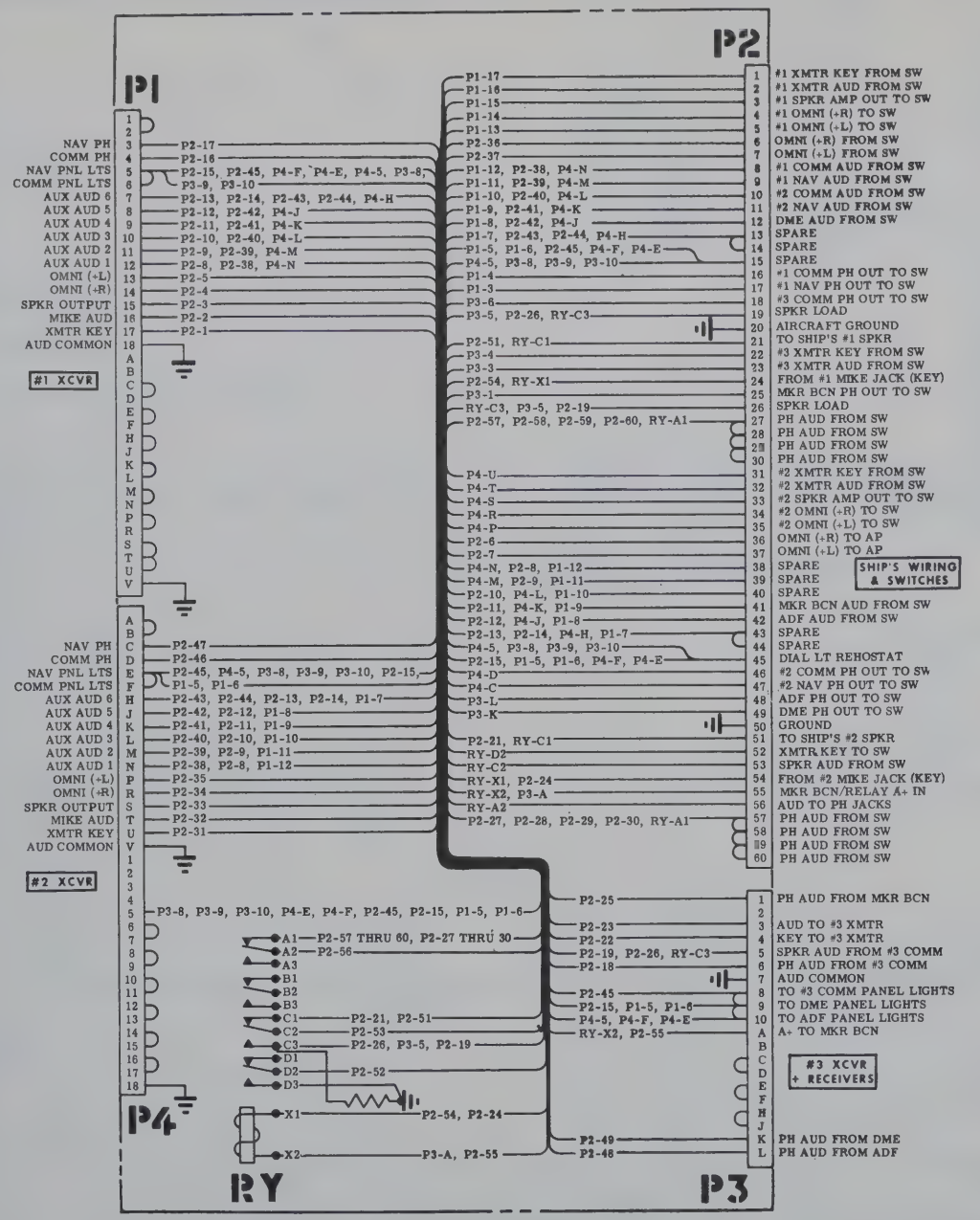

REVISIONS			
LTR	DESCRIPTION	DATE	APPROVED
A	BY REV: 465195-2 WAS 46195-2, ADD NOTE 8 EDRR 24170		

NOTES:

1. THIS DRAWING FOR TECHNICAL USE ONLY
2. P1 AND P4 MATE WITH S-1838-2 HOUSING (AMP 1-582191-5)
3. P2 MATES WITH S-1838-1 HOUSING (AMP 480146-7)
4. P3 MATES WITH S-1838-3 HOUSING (AMP 582963-2)
5. ALL THE ABOVE HOUSINGS USE S-1837-1 CONTACT PINS (AMP 42717-3LP) AND S-1836-1 KEYING PLUGS (AMP 582501-1)
6. CONTACTS CRIMP ON WITH AMP TOOL 90017
7. CONTACTS EXTRACT WITH AMP TOOL 465195-2
8. IF A CRIMPING TOOL IS NOT AVAILABLE WIRES MAY BE SOLDERED TO PINS IN LIEU OF CRIMPING

CONTRACT NO:			
	NAME	DATE	
DESIGN	V R SIPES	1-13-69	
GROUP	J Wise	3-11-69	
DRAWN	NUCKOLLS	2-7-69	
CHECK	HARRIS	3-4-69	
STRESS	TULLIS	3-7-69	
PROJECT	Ted Moody	3-12-69	
APPD	M Stwany	3-5-69	

Cessna AIRCRAFT CO. — COMMERCIAL AIRCRAFT DIV. 5800 E. PAWNEE WICHITA, KANSAS

TITLE: SCHEMATIC DIAGRAM - AUDIO JUNCTION BOX, INTERNAL WIRING

SIZE	CODE IDENT. NO.	DWG NO.
C	71379	1770000

SCALE: NONE | 177 | PAGE: 2.1.1

EDERR 10361 SER 177-01165 & ON

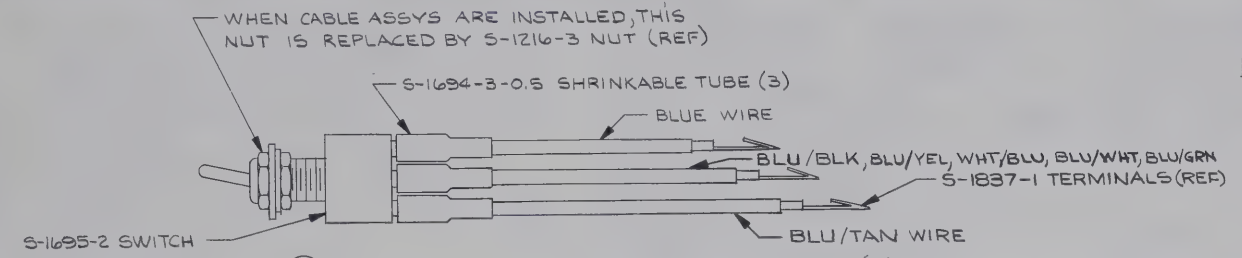

(205) CABLE ASSY - AUDIO SELECTOR SWITCH, COM1

(206) CABLE ASSY - AUDIO SELECTOR SWITCH, COM2

(207) CABLE ASSY - AUDIO SELECTOR SWITCH, ADF

(208) CABLE ASSY - AUDIO SELECTOR SWITCH, DME

(243) CABLE ASSY - AUDIO SELECTOR MKR BCN.

REVISION			
LET	DESCRIPTION	DATE	APPD
A	BY REV: PAGE 2.6.2 WAS 2.6.1 & 2.6.1.1 WAS 2.6.2 ED&RR 00873	RCA 11-14-67	MDS RH N&W 7/11
B	BY REV: ADD S-1837-1 (REF); DELETE ALL PIN TERM NO. CALLOUTS & NOTE 2&5. ED&RR 01831 (SR5440)DX	JWH 4/22/68	CKL MDS OET N&W
C	BY REV: ADD -243, COM1 TO -205, COM2 TO -206, ADF TO -207 & DME TO -208. ED&RR 10066 SER 1701165	K.R.T. 9-6-68	RCA MDS OET N&W

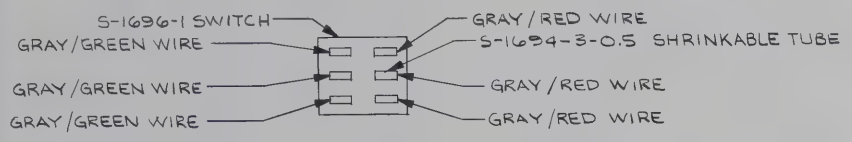

(209) CABLE ASSY-OMNI SELECTOR SWITCH (REAR VIEW)

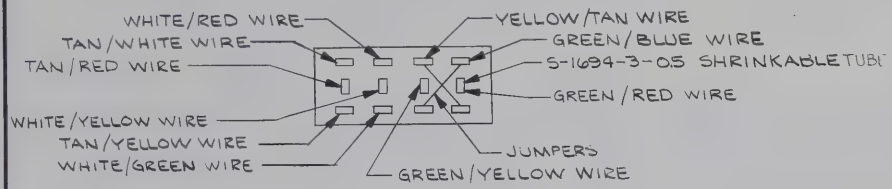

(210) CABLE ASSY-TRANSMITTER SELECTOR SWITCH (REAR VIEW)

NOTES:

1. S-1694-3-0.5 TUBING INSTALLED ON ALL SWITCHES AS SHOWN ON AUDIO SELECTOR SWITCH.
2. ~~NUMBERS IN ( ) ARE TERM. BD. NUMBERS (1077071-1).~~
3. SWITCHES SHOWN WITH KEY WAY AT TOP.
4. ALL WIRES ARE REFERENCED. REFER TO APPLICABLE WIRING DIAGRAM FOR FABRICATION INFORMATION.
5. ~~WIRE NUMBERS APPLY AS FOLLOWS: -205, (1) & (11); -206, (1) & (2); -207, (13) & (12); -208, (19) & (18).~~

243	210	209	208	207	206	205	EFFECTIVE SERIALS	PAGE	PART NUMBER	DESCRIPTION
AR								2.6.1	-243	CABLE ASSY, AUD SEL, MKR BCN
.			AR	AR	AR	AR		2.6.3		WIRING
		AR						2.6.1.1		WIRING
	AR							2.6.2		WIRING
	1								S-1697-1	SWITCH
		1							S-1696-1	SWITCH
1			1	1	1	1			S-1695-2	SWITCH
3	12	6	3	3	3	3			S-1694-3-0.5	SHRINK, TUBE
									-210	CABLE ASSY-XMTR SEL
									-209	CABLE ASSY-OMNI SEL
									-208	CABLE ASSY-AUD SEL #4-DME
									-207	CABLE ASSY AUD SEL #3-ADF
									-206	CABLE ASSY-AUD SEL 2 #-COM2
									-205	CABLE ASSY-AUD SEL #1-COM1
NO. REQD/NEXT ASSY										

LIST OF MATERIAL

DO NOT SCALE PRINT
BREAK ALL SHARP EDGES
A/R = AS REQD
CES-XXXX=CESSNA SPEC. NO.
S-XXX OR CMXXXX=CESSNA STD. NO.
S=APPROX EQUAL SPACES
CES-1000 IS APPLICABLE VENDOR CODES PER S-1400

UNLESS OTHERWISE SPECIFIED
DIMENSIONS ARE IN INCHES
TOLERANCES ARE
DECIMALS: .00 ±.03, .000 ±.010 | ANGLES: MACH ±0 30' | FORMED ±2°
FOR HOLES, CSINKS, ETC., SEE CES 1012
FOR BASIC CODES SEE NAS 523
BJ=MS20470AD | BB=MS20426AD

SUPERSEDES:

SUPERSEDED BY:

CONTRACT NO:

	NAME	DATE
DESIGN	SIPES VR	5-8-67
GROUP	H.WISE	5-8-67
DRAWN	SIPES V.R.	5-10-67
CHECK	YAKSHAW	7-7-67
STRESS		
PROJECT	TED MOODY	5-8-67
APPD		

Cessna AIRCRAFT CO.
COMMERCIAL AIRCRAFT DIV.
5800 E. PAWNEE
WICHITA, KANSAS

TITLE: CABLE ASSY - AUDIO, OMNI & XMTR SELECTOR SWITCHES

SIZE: C | CODE IDENT. NO.: 71379 | 1770000

SCALE: NONE | SER 1700001 & ON | PAGE: 2.6.0

FORM NO. 80-221

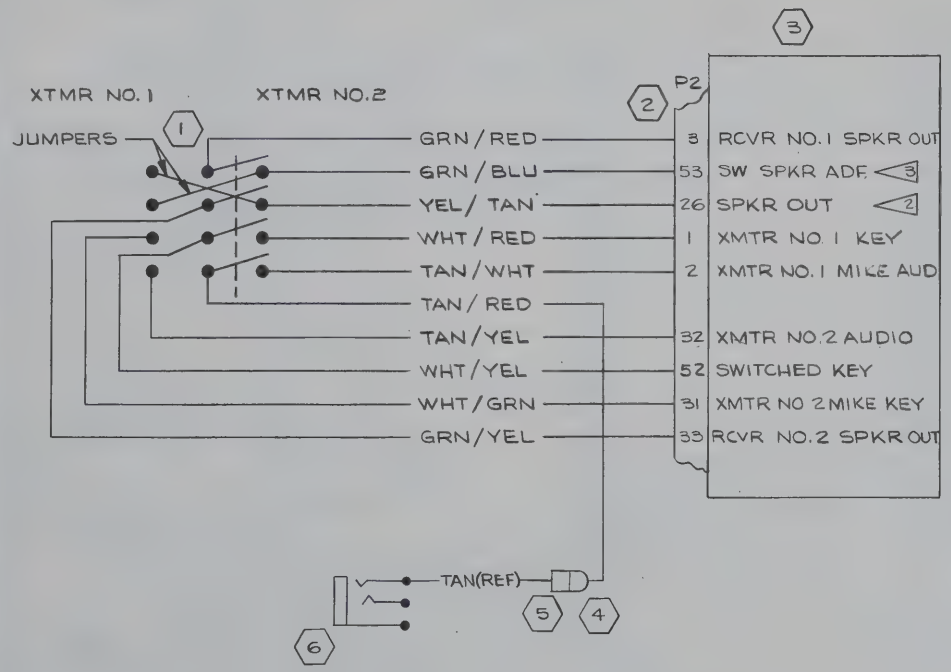

REVISION			
LET	DESCRIPTION	DATE	APPD
A	BY REV: 33 WAS 3, 56 WAS 26, 23 WAS 53, 1 WAS 31, 2 WAS 32, 32 WAS 2, 22 WAS 52, 3 WAS 33 ED&RR 02371	SEM 5-23-68	GKI MDS DET H/W WRS TM
B	BY REV: 3 WAS 33, 26 WAS 56, 53 WAS 23, 31 WAS 1, 32 WAS 2, 2 WAS 32, 1 WAS 31, 52 WAS 22, 33 WAS 3, XMTR 2 WAS XMTR 1, XMTR 1 WAS XMTR 2 ED&RR 03406 (SR 5440) IX	EGY 6-19-68	GKI MDS H/W TM
C	BY REV: 26 WAS 53, 53 WAS 26, 1 WAS 31, 2 WAS 32, 32 WAS 2, 31 WAS 1; REROUTE TAN/RED; ADD S-1637-1, S-1637-2, S-1102-1 & NOTE 1 & 2 ED&RR'S 10156 & 10066 SER 1770101 & 165	EGY 10-3-68	JWH MDS DET H/W TM

WIRE CODE NO.	GA	MATERIAL	LG	TERMINALS			SERIALS
YEL/TAN	20	20-4-10		SOLDER	S-1837-1		
WHT/YEL	22	22-9-4					
WHT/RED	22	22-9-2					
WHT/GRN	22	22-9-5					
TAN/YEL	22	22-10-4					
TAN/WHT	22	22-10-9			S-1837-1		
TAN/RED	22	22-10-2			S-1635-1		
GRN/YEL	20	20-5-4			S-1837-1		
GRN/RED	20	20-5-2			S-1837-1		
GRN/BLU	20	20-5-6		SOLDER	S-1837-1		

WIRE TABLE

NOTES:

1. TRANSMITTER NO.1 IS ON KEYWAY SIDE OF SWITCH.
2. NO.26 CONNECTS TO 10Ω RESISTOR ON P.C. BOARD
3. NO.53 CONNECTS TO RELAY WIPER CONTACT THEN TO SHIP SPKR THRU NORMAL CLOSED CONTACT TO 51. WHEN RELAY IS ACTUATED BY MIC KEY CIRCUIT 53 IS CONNECTED TO 10Ω RESISTER THRU NORMAL OPEN CONTACT

ITEM NO.	PART NO.	DESCRIPTION	PAGE
6	S-1102-1	MIKE JACK	7.1.1
5	S-1637-2	HOUSING-PLUG	
4	S-1637-1	HOUSING-CAP	
3	0570084-1	JUNCTION BOX ASSY	7.5.1
2	S-1831-1	HOUSING	
1	S-1697-1	SWITCH	2.6.0

EQUIPMENT TABLE

CES-1000 IS APPLICABLE VENDOR CODES PER S-1400
CES-XXXX=CESSNA SPEC. NO.
S-XXX OR CMXXXX=CESSNA STD. NO.

SUPERSEDES: 1770000 PG. 2.6.2

SUPERSEDED BY:

CONTRACT NO:

	NAME	DATE
DESIGN	SIPES VR	1-29-68
GROUP	H Wise	4-29-68
DRAWN	HARRIS	4/22/68
CHECK	G. IRVIN	4-24-68
STRESS	TULLIS	4-29-68
PROJECT	[illegible]	4-30-68
APPD	SWANEY	4-27-68

Cessna AIRCRAFT CO.
COMMERCIAL AIRCRAFT DIV.
5800 E. PAWNEE
WICHITA, KANSAS

TITLE
WIRING DIAGRAM — TRANSMITTER SELECTOR SWITCH

SIZE	CODE IDENT. NO.	DWG NO.
C	71379	1770000

SCALE: NONE | 177 | PAGE: 2.6.2.1

FORM NO. 80-215A

ED&RR 01831 SER 1770116 5

NOTES:

1. SPKR FUNCTION ON KEY WAY SIDE OF SWITCH

REVISION			
LET	DESCRIPTION	DATE	APPD
A	BY REV: 9 WAS 39, 46 WAS 16, 30 WAS 60, 8 WAS 38, 16 WAS 46, 28 WAS 58 41 WAS 40, 18 WAS 48, 60 WAS 30 40 WAS 41, 55 WAS 25, 58 WAS 28 ED & RR 02371	SEM 5-23-68	GKI MDS DET JJW VRS
B	BY REV: 39 WAS 9, 16 WAS 46, 60 WAS 30, 38 WAS 8, 46 WAS 16, 58 WAS 28, 40 WAS 41, 48 WAS 18, 30 WAS 60, 41 WAS 40, 25 WAS 55, 28 WAS 58 ED & RR 03406 (S.R. 5440) IX	EGY 6-19-68	GKI MDS RW TM
C	BY REV: 9 WAS 39, 27 WAS 60, 10 WAS 38, 57 WAS 58, 42 WAS 40, 29 WAS 30, 12 WAS 41, 49 WAS 25, 59 WAS 28; ADD MKR BCN SW; WHT/BLU WAS BLU/YEL, BLU/TAN WAS GRY/YEL, BLU/WHT WAS BLU/GRN ED & RR 10156 SER 1770165	EGY 10-3-68	JWH MDS DET HAW TM

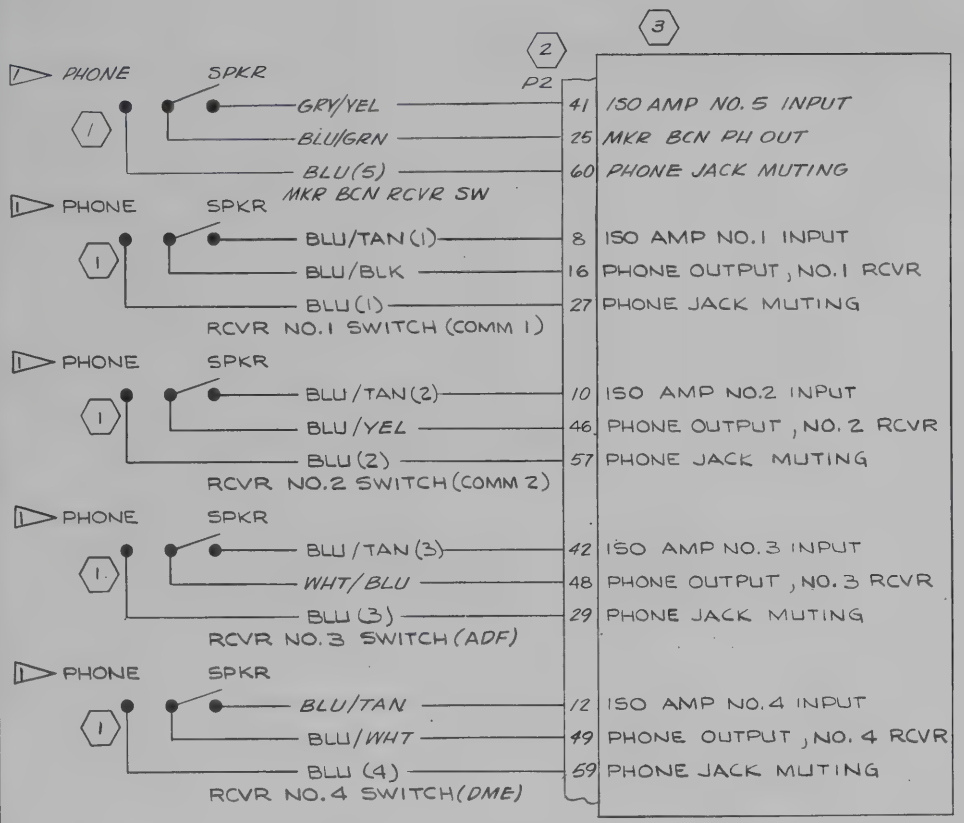

WIRE CODE NO.	GA	MATERIAL	LG	TERMINALS		SERIALS
BLU(5)	22	-22-8-4		SOLDER	S-1837-1	
BLU/GRN	22	-22-8-4				
GRY/YEL	22	-22-8-4				
BLU/TAN	22	-22-8-4				
WHT/BLU		-22-6-4				
BLU/WHT		-22-6-5				
BLU/TAN(3)		-22-6-10				
BLU/TAN(2)		-22-6-10				
BLU/TAN(1)		-22-6-10				
BLU/YEL		-22-6-2				
BLU/BLK		-22-6-0				
BLU (4)		-22-6				
BLU (3)		-22-6				
BLU (2)		-22-6				
BLU (1)	22	-22-6		SOLDER	S-1837-1	

WIRE TABLE

ITEM NO.	PART NO.	DESCRIPTION	PAGE
3	0570084-1	JUNCTION BOX ASSY	7.5.1
2	S-1838-1	HOUSING	
1	S-1693-2	SWITCH	2.6.0

EQUIPMENT TABLE

CES-1000 IS APPLICABLE
VENDOR CODES PER S-1400
CES-XXXX=CESSNA SPEC. NO.
S-XXX OR CMXXXX=CESSNA STD. NO.

SUPERSEDES: 1770000 PG. 2.6.3

SUPERSEDED BY:

CONTRACT NO:

	NAME	DATE
DESIGN	SIPES VR	1-29-68
GROUP	H. Wise	4-29-68
DRAWN	HARRIS	4-22-68
CHECK	G. IRVIN	4-24-68
STRESS	TULLIS	4-29-68
PROJECT		4-30-68
APPD	SWANEY	4-27-68

Cessna AIRCRAFT CO.
COMMERCIAL AIRCRAFT DIV.
5800 E. PAWNEE
WICHITA, KANSAS

TITLE
WIRING DIAGRAM — AUDIO SELECTOR SWITCH

SIZE	CODE IDENT. NO.	DWG NO.
C	71379	1770000

SCALE: NONE | 177 | PAGE: 2.6.3.1

FORM NO. 80-215A

ED & RR 01831 SER 1770165

NOTES:

1. OMNI 2 FUNCTION TO BE ON KEYWAY SIDE OF SWITCH

REVISION			
LET	DESCRIPTION	DATE	APPD
A	BY REV: 34 WAS 4, 35 WAS 5, 5 WAS 35, 4 WAS 34 EDERR 02371	SEM 5-23-68	GKI MDS DLI RJW VRS
B	BY REV: 4 WAS 34, 5 WAS 35, 35 WAS 5, 34 WAS 4 EDERR 03406 (SR 5440) IX	EGY 6-19-68	GKI MDS

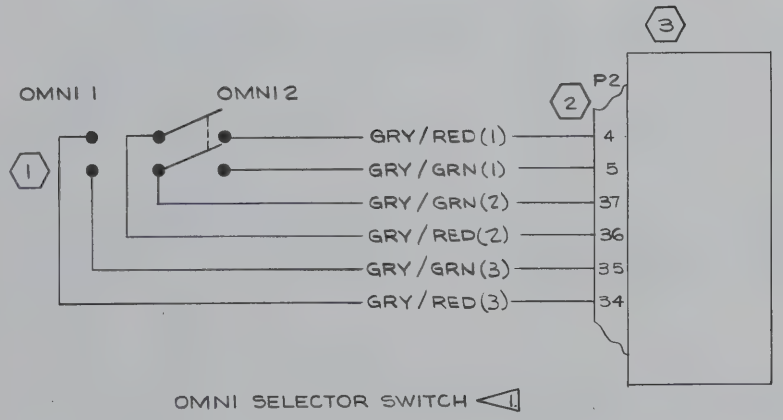

OMNI SELECTOR SWITCH 1

WIRE CODE NO.	GA	MATERIAL	LG	TERMINALS			SERIALS
GRY/RED(3)	22	-22-8-2		SOLDER	S-1837-1		
GRY/RED(2)	22	-22-8-2					
GRY/RED(1)	22	-22-8-2					
GRY/GRN(3)	22	-22-8-5					
GRY/GRN(2)	22	-22-8-5					
GRY/GRN(1)	22	-22-8-5		SOLDER	S-1837-1		

WIRE TABLE

ITEM NO.	PART NO.	DESCRIPTION
3	0570084-1	JUNCTION BOX ASSY
2	S-1838-1	CONNECTOR
1	S-1696-1	SWITCH

EQUIPMENT TABLE

CES-1000 IS APPLICABLE
VENDOR CODES PER S-1400
CES-XXXX=CESSNA SPEC. NO.
S-XXX OR CMXXXX=CESSNA STD. NO.

SUPERSEDES: 1770000 PG 2.6.1.0 2.6.1.1

SUPERSEDED BY:

CONTRACT NO:

	NAME	DATE
DESIGN	SIPES VR	1-29-68
GROUP	H. Wise	4-29-68
DRAWN	HARRIS	4/22/68
CHECK	G. IRVIN	4-29-68
STRESS	WILLIS	4-29-68
PROJECT		
APPD	SWANEY	4-27-68

Cessna AIRCRAFT CO.
COMMERCIAL AIRCRAFT DIV.
5800 E. PAWNEE
WICHITA, KANSAS

TITLE
WIRING DIAGRAM — OMNI AUDIO XMTR SWITCH

SIZE	CODE IDENT. NO.	DWG NO.
C	71379	1770000

SCALE: NONE | 177 | PAGE: 2.6.4

FORM NO. 80-215A

ED&RR 01831 (SR5440) IX

REVISION			
LET	DESCRIPTION	DATE	APPD
A	BY REV: ADD S-1641-9, NOTE 2, RED/YEL, TAN/BLU, TAN/RED & TAN/YEL WIRES ED&RR 10114 SER 17701165 & ON	JWH 10-17-68	RCA MOS DET HFW VRS, VM

NOTES:

1. CESSNA 300 NAV/COM AMPLIFIERS ARE OPERATED "ALWAYS HOT" SPKR OUTPUTS FROM EACH SYSTEM DRIVE EITHER 5Ω10 WATT DUMMY LOAD OR THE SPKR AS DETERMINED BY TRANSMITTER SELECTED

2 TO BE USED ONLY WHEN IN-525A IND IS INSTL

WIRE CODE NO.	GA	MATERIAL	LG	TERMINALS			SERIALS
TAN/YEL	22	-22-10-4		SOLDER	S-1636-1	2	
TAN/RED	22	-22-10-2		SOLDER	S-1636-1	2	
TAN/BLU	22	-22-10-6		SOLDER	S-1636-1	2	
RED/YEL	22	-22-2-4		SOLDER	S-1636-1	2	
YEL	18	-18-4		SOLDER	S-1837-1		
WHT/YEL	22	-22-9-4			SOLDER		
WHT/TAN	22	-22-9-10			SOLDER		
WHT/GRN	22	-22-9-5			SOLDER		
WHT/BLK	22	-22-9-0			S-1837-1		
TAN	22	-22-10			S-1837-1		
RED/WHT	18	-18-2-9			S-1370-1		
RED/BLK	18	-18-2-0			S-1370-1		
RED	16	-16-2			S-1367-2-6		
GRY/RED(2)	22	-22-8-2			S-1837-1		
GRY/RED(1)	22	-22-8-2			SOLDER		
GRY/GRN(2)	22	-22-8-5			S-1837-1		
GRY/GRN(1)	22	-22-8-5			SOLDER		
GRN/WHT	20	-20-5-9			S-1837-1		
BLU/YEL	22S	S-1491-22-6-4			SOLDER		
BLU/WHT	22S	S-1491-22-6-9			SOLDER		
BLU/TAN(5)	22	-22-6-10			S-1837-1		
BLU/TAN(4)	22	-22-6-10					
BLU/TAN(3)	22	-22-6-10					
BLU/TAN(2)	22	-22-6-10					
BLU/TAN(1)	22	-22-6-10			S-1837-1		
BLU/RED	22S	S-1461-22-6-2			SOLDER		
BLU/BLK	22S	S-1461-22-6-0			SOLDER		
BLU	22	-22-6			S-1837-1		
BLK (2)	22	-22-0			S-1837-1		
BLK (1)	16	-16-0		SOLDER	S-1367-2-8		

WIRE TABLE

ITEM NO.	PART NO.	DESCRIPTION	PAGE
12	S-1641-9	HOUSING - SOCKET	2
11	36[illegible]0-1114	XCVR (TYPE 517R)	3.1.0
10	31640-0000	IND (TYPE IN-514	3.1.0
9	32350-0000	IND (TYPE IN-525A)	3.1.0
8	18397	CONNECTOR	
7	0570084-1	JUNCTION BOX	7.5.1
6	S-1838-2	CONNECTOR	
5	29752	CONNECTOR	
4	29753	CONNECTOR	
3	S-1360-15	CIRCUIT BREAKER	3.1.0
2	29747-0026	CONNECTOR	
1	37600-1114	XCVR (TYPE 540A)	3.1.0

EQUIPMENT TABLE

CES-1000 IS APPLICABLE
VENDOR CODES PER S-1400
CES-XXXX=CESSNA SPEC. NO.
S-XXX OR CMXXXX=CESSNA STD. NO.

SUPERSEDES: P 2.7.0

SUPERSEDED BY:

CONTRACT NO:

	NAME	DATE
DESIGN	SIPES VR	1-29-68
GROUP	H. Wise	4-29-68
DRAWN	HARRIS	4/[illegible]/68
CHECK	G IRVIN	4-24-68
STRESS	TULLIS	4-29-68
PROJECT	[illegible]	4-30-68
APPD	SWANEY	4-27-68

Cessna AIRCRAFT CO.
COMMERCIAL AIRCRAFT DIV.
5800 E. PAWNEE
WICHITA, KANSAS

TITLE
WIRING DIAGRAM — CESSNA 300 NAV/COM (TYPE 540A, 517R WITH IN525A & IN-514)

SIZE	CODE IDENT. NO.	DWG NO.
C	71379	1770000

SCALE: NONE 177. PAGE: 2.7.1.1

FORM NO. 80-215A

ED&RR 01831 SER17701165 IX

REVISION			
LET	DESCRIPTION	DATE	APPD
A	SEE PAGE 2.7.1.1		

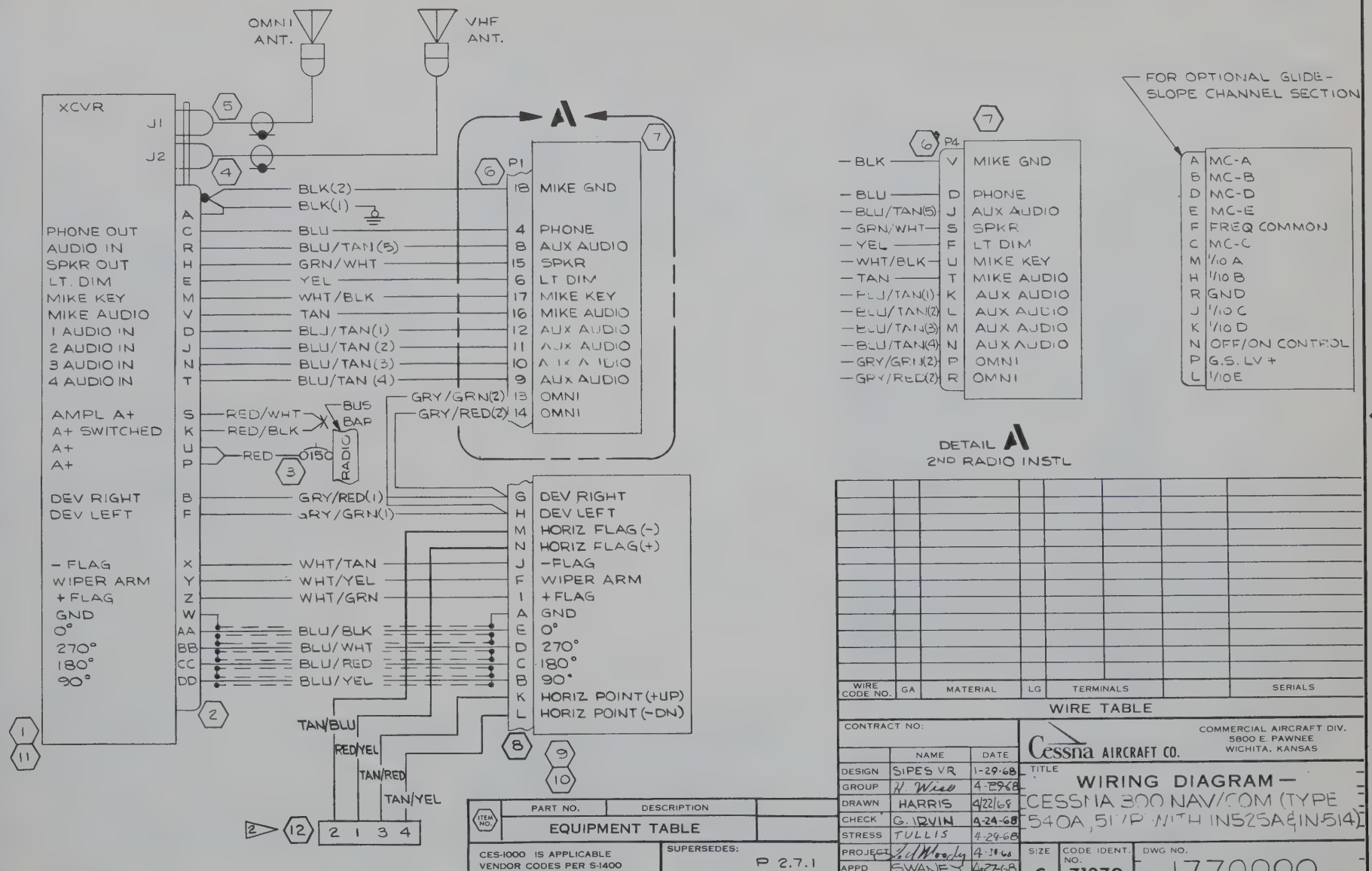

FOR OPTIONAL GLIDE-SLOPE CHANNEL SECTION

DETAIL A
2ND RADIO INSTL

WIRE CODE NO.	GA	MATERIAL	LG	TERMINALS		SERIALS

WIRE TABLE

ITEM NO.	PART NO.	DESCRIPTION

EQUIPMENT TABLE

CES-1000 IS APPLICABLE VENDOR CODES PER S-1400
CES-XXXX=CESSNA SPEC. NO.
S-XXX OR CMXXXX=CESSNA STD. NO.

SUPERSEDES: P 2.7.1

SUPERSEDED BY:

CONTRACT NO:

	NAME	DATE
DESIGN	SIPES VR	1-29-68
GROUP	H. Wise	4-29-68
DRAWN	HARRIS	4/22/68
CHECK	G. IRVIN	4-24-68
STRESS	TULLIS	4-29-68
PROJECT	Ed Woody	4-30-68
APPD	SWANEY	4-27-68

Cessna AIRCRAFT CO.
COMMERCIAL AIRCRAFT DIV.
5800 E. PAWNEE
WICHITA, KANSAS

TITLE
WIRING DIAGRAM —
CESSNA 300 NAV/COM (TYPE 540A, 51 P WITH IN525A & IN514)

SIZE	CODE IDENT. NO.	DWG NO.
C	71379	1770000

SCALE: NONE | 177 | PAGE: 2.7.1.2

FORM NO. 80-215A

EDERR 01831 SER 17701165 IX

REVISIONS			
LTR	DESCRIPTION	DATE	APPROVED
A	BY REV: ADD S-1838-3 & 0570084-1 & DETAIL A. ED&RR 01831 (SR5440) IX	JWH 4/22/68	GKI MDS DET HLW TMY

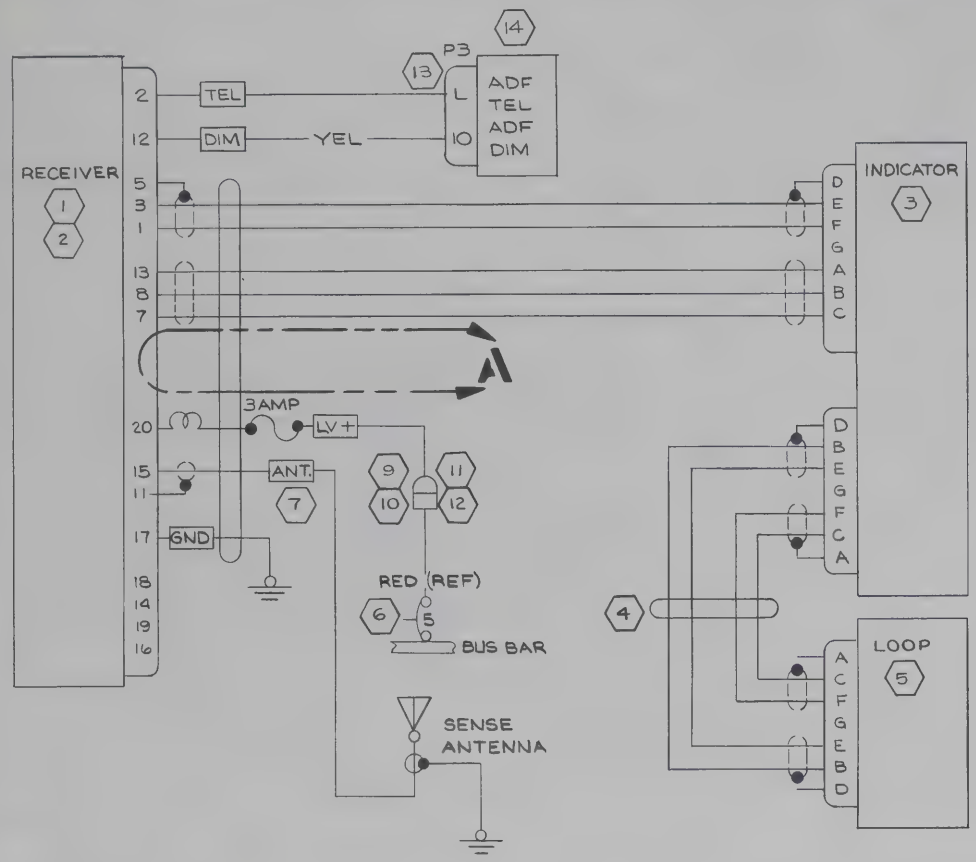

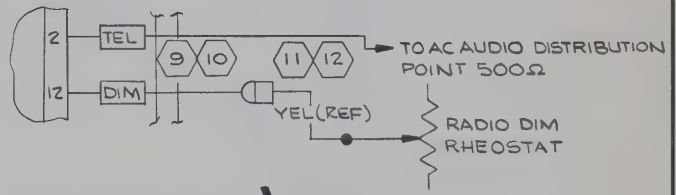

DETAIL A
THRU SER 17701164

NOTES:

1. CONNECTIONS SHOWN ARE FOR TOP MOUNTING SENSE AND BOTTOM MOUNTING LOOP ANTENNA.
2. ALL WIRES ARE VENDOR FURNISHED WITH RCVR EXCEPT CHOKE IN CIRCUIT BETWEEN PIN 20 & THE FUSEHOLDER WHICH MUST BE ADDED ON INSTL IN AIRCRAFT.

ITEM NO.	PART NO.	DESCRIPTION
14	0570084-1	JUNCTION BOX
13	S-1838-3	CONNECTOR
12	S-1637-2	HOUSING-PLUG
11	S-1637-1	HOUSING-CAP
10	S-1638-1	PIN
9	S-1636-1	SOCKET
8	XR6637	RHEOSTAT (83777)
7	A-263	CHOKE (23939)
6	S-1360-5	CIRCUIT BREAKER
5	32880-0100	LOOP ANT (00779)
4	33827	LOOP CABLE (00779)
3	32680-0000	IND (ARC TYPE IN-521B)
2	35700-1000	RCVR (ARC TYPE R-521B)
1	35700-1100	RCVR (ARC TYPE R-521B)

EQUIPMENT TABLE

WIRE CODE NO.	GA	MATERIAL	LG	TERMINALS		SERIALS

WIRE TABLE

CONTRACT NO:

	NAME	DATE
DESIGN	SIPES VR	5-16-67
GROUP	H.WISE	5-16-67
DRAWN	SIPES VR	5-16-67
CHECK	YAKSHAW	7-7-67
STRESS		
PROJECT	TED MOODY	5-16-67
APPD		

Cessna AIRCRAFT CO.
COMMERCIAL AIRCRAFT DIV.
5800 E. PAWNEE
WICHITA, KANSAS

TITLE
WIRING DIAGRAM —
CESSNA 300 ADF
(ARC TYPE 521A)

SIZE C | CODE IDENT. NO. 71379 | DWG NO. 1770000

SCALE: NONE | SER 17700001 & ON | PAGE: 2.8

FORM NO. 80-215

REVISIONS			
LTR	DESCRIPTION	DATE	APPROVED
A	BY REV: ADD 057008-1-1, S-1838-2 & DETAIL A; CHANGE TERM. TO AGREE; CORRECTED TITLE TO READ (ARC TYPE 524A) WAS (ARC TYPE 543A) ED & RR 01831 (SR5440) IX	JWH 4-22-68	GKI MDS DET H/W
B	BY REV: ADD BLU/TAN (1) (2) (3) & (4) & P4, P1; J WAS U ED & RR 10156 SER 17701165	EGY 10-3-68	JWH MDS DET H/W

NOTES:

1. ON SINGLE CESSNA 300 COMM INSTL, RED/BLK WIRE (PIN K) IS CONNECTED TO RED/WHT WIRE (PIN S) WITH AN S-1370-1 SPLICE, & BLUE WIRE (PIN C) IS CONNECTED TO BLUE/TAN WIRE (PIN R) WITH S-1370-1 SPLICE. WHEN 300 COMM IS INSTL WITH OTHER RADIOS, RED/WHT WIRE CONNECTS TO CKT BKR AS SHOWN. RED/BLK WIRE IS TERMINATED WITH S-1557-1 CAP; BLUE WIRE CONNECTS TO WIPER OF SPKR-PHONE SW & BLUE/TAN WIRE CONNECTS TO SPKR-TERM OF SPKR-PHONE SW.

2. BLACK 16 GA. WIRE IS HALVED, 1/2 SOLDERS TO (PIN A), 1/2 SOLDERS TO GND LUG

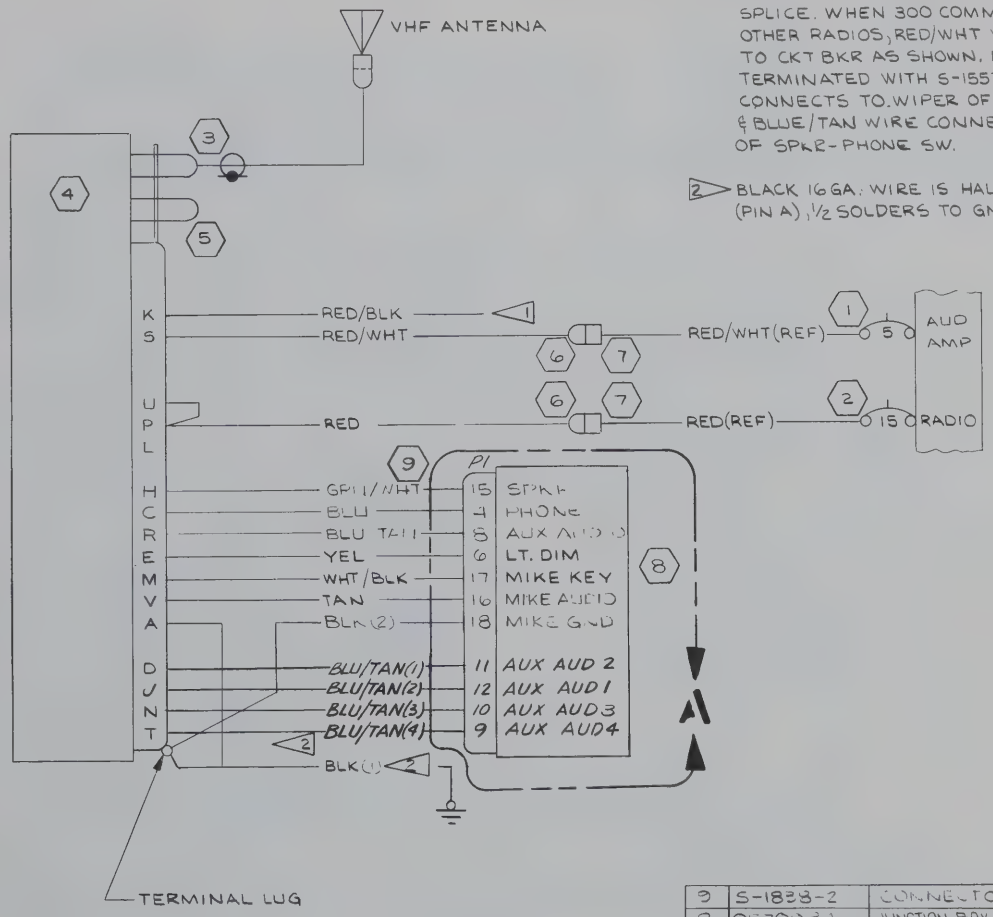

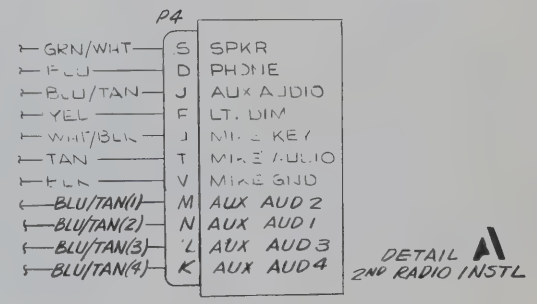

WIRE CODE NO.	GA	MATERIAL	LG	TERMINALS			SERIALS
BLU/TAN(4)	22	22-6-10		SOLDER	S-1837-1		
BLU/TAN(3)	22	22-6-10		SOLDER	S-1837-1		
BLU/TAN(2)	22	22-6-10		SOLDER	S-1837-1		
BLU/TAN(1)	22	22-6-10		SOLDER	S-1837-1		
YEL	18	-18-4		SOLDER	S-1837-1		
WHT/BLK	22	-22-9-0		SOLDER	S-1837		
TAN	22	-22-10		SOLDER	S-1837-1		
RED/WHT	18	-18-2-9		S-1370-1	S-1367-1-6		
RED/BLK	18	-18-2-0		SOLDER	1		
RED	16	-16-2			S-1635-1		
GRN/WHT	20	-20-5-9			S-1837-1		
BLU/TAN	22	-22-6-10			S-1837-1		
BLU	22	-22-6			S-1837-1		
BLK (2)	22	-22-0			S-1837-1		
BLK (1)	16	-16-0		SOLDER	S-1367-2-8		

WIRE TABLE

ITEM NO.	PART NO.	DESCRIPTION
9	S-1838-2	CONNECTOR
8	057008-1-1	JUNCTION BOX ASSY
7	S-1637-2	HOUSING-PLUG
6	S-1637-1	HOUSING-CAP
5	29747-0018	CONNECTOR (00781)
4	31390-1514	RCVR/XMTR (ARC TYPE 524A)
3	29753	CONNECTOR (00781)
2	S-1360-15	CIRCUIT BREAKER
1	S-1360-5	CIRCUIT BREAKER

EQUIPMENT TABLE

CONTRACT NO:

	NAME	DATE
DESIGN	SIPES VR	5-23-67
GROUP	H. WISE	5-23-67
DRAWN	SIPES VR	5-23-67
CHECK	YAKSHAW	6-26-67
STRESS		
PROJECT	TED MOODY	5-23-67
APPD		

Cessna AIRCRAFT CO.
COMMERCIAL AIRCRAFT DIV.
5800 E. PAWNEE
WICHITA, KANSAS

TITLE
WIRING DIAGRAM — CESSNA 300 COMM (ARC TYPE 524A)

SIZE	CODE IDENT. NO.	DWG NO.
C	71379	1770000

SCALE: NONE | SER 17700001 & ON | PAGE: 2.9.1

FORM NO 80-215

REVISION			
LET	DESCRIPTION	DATE	APPD
A	BY REV: ADD 0570084-1 & S-1838-2 DETAIL A, BLU & YEL WIRE ED&RR 01831 (SR 5440) IX	JWM 1-22-68	GLI MDS DET JM

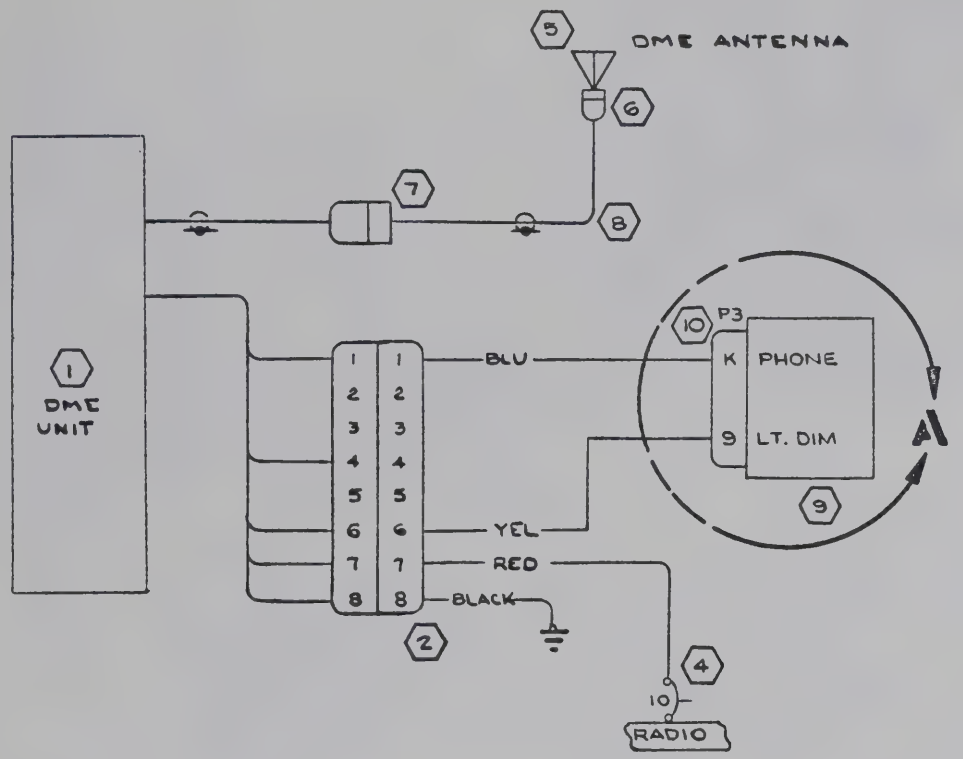

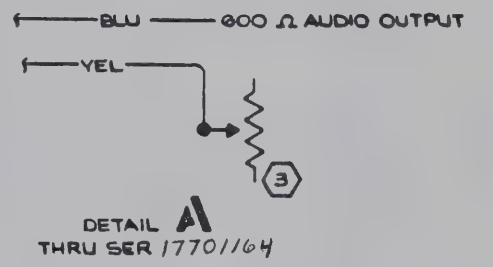

NOTES:

1. ITEMS 6, 7 & 8 ARE SUPPLIED AS PART OF KING INSTL KIT NO 050-1052-00.

ITEM NO.	PART NO.	DESCRIPTION	VENDOR
10	S-1838-3	CONNECTOR	
9	0570084-1	JUNCTION BOX	
8	21-004	CONNECTOR	(07497)
7	030-0021-01	CONNECTOR	(KG)
6	030-24-00	CONNECTOR RT ANGLE	(KG)
5	KA-32	ANTENNA	(KG)
4	S-1360-10	CIRCUIT BKR	
3	XR6637	RHEOSTAT	(83777)
2	030-2043-00	CONNECTOR	(KG)
1	C582602-0101	DME UNIT	

EQUIPMENT TABLE

CES-1000 IS APPLICABLE
VENDOR CODES PER S-1400
CES-XXXX=CESSNA SPEC. NO.
S-XXX OR CMXXXX=CESSNA STD. NO.

SUPERSEDES:

SUPERSEDED BY:

WIRE CODE NO.	GA	MATERIAL	LG	TERMINALS			SERIALS
YEL	18	-18-4		S-1370	S-1837-1		SER (SR 5440) & ON
BLU	22	-22-6		SOLDER	S-1837-1		SER (SR 5440) & ON
BLU	22	-22-6		SOLDER	S-1367-1-8		THRU SER (SR 5440)
RED	16	-16-2		SOLDER	S-1370-2		
YEL	18	-18-4		SOLDER	S-1370-1		THRU SER (SR 5440)
BLACK	16	-16-0		SOLDER	S-1367-2-8		

WIRE TABLE

CONTRACT NO:

	NAME	DATE
DESIGN	SIPES V R	6/29/67
GROUP	[illegible]	7-3-67
DRAWN	SIPES V R	6-29-67
CHECK	YAKSIAN	6 29 67
STRESS	[illegible]	[illegible]
PROJECT	[illegible]	7 2 67
APPD		

Cessna AIRCRAFT CO.
COMMERCIAL AIRCRAFT DIV.
5800 E. PAWNEE
WICHITA, KANSAS

TITLE
WIRING DIAGRAM—
CESSNA 300 DME

SIZE	CODE IDENT. NO.	DWG NO.
C	71379	1770000

SCALE: NONE (SR 5172) IX PAGE: 2.10.1

FORM NO. 00-2184

NOTES:

1. "PHONE" & "LO" FUNCTION TO BE ON KEY WAY SIDE OF SW
2. PART OF -243 CABLE ASSY

REVISION			
LET	DESCRIPTION	DATE	APPD
A	BY REV: ADD LETTERS TO 31240-0014 REROUTE RED/GRN; ADD RED(REF) S-1360-10 & BUS BAR; 60 WAS 28 ED & RR 10156 SER 1770116 & UP	EGY 9-3-68	JWH
B	BY REV: ADD -223, -243 & NOTE 2; S-1696-2 WAS S-1696-1 ED & RR 10383	DLB 2-14-69	JWH MDS

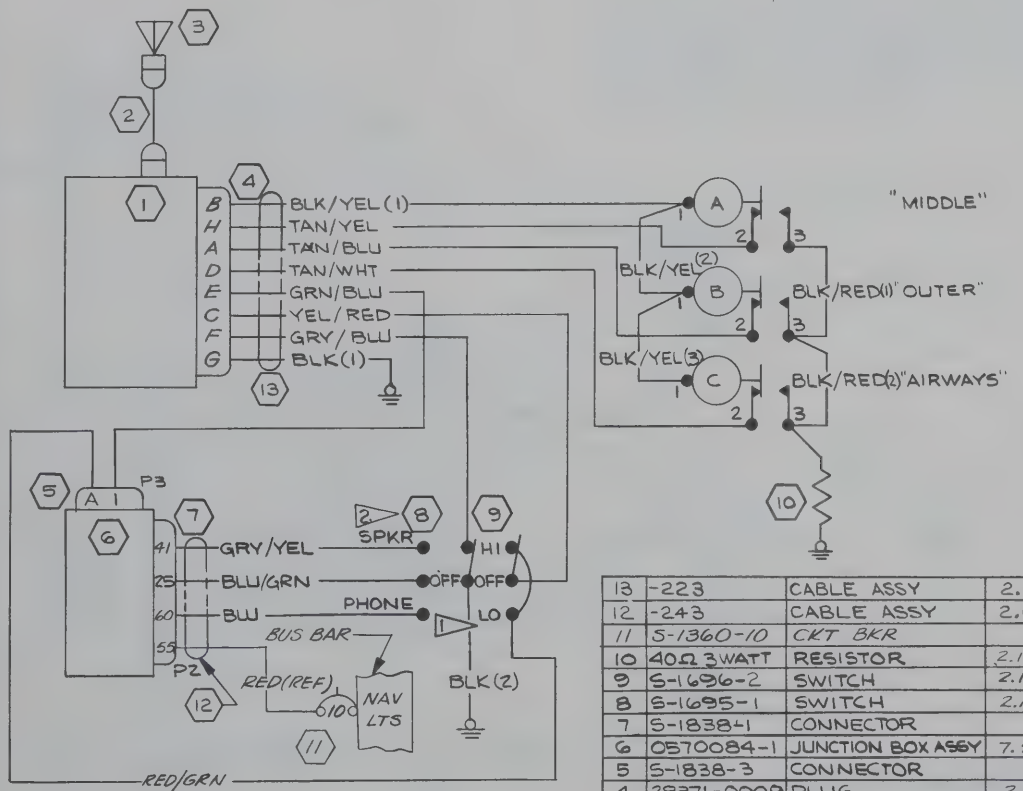

ITEM NO.	PART NO.	DESCRIPTION	PAGE
		EQUIPMENT TABLE	
13	-223	CABLE ASSY	2.11.0
12	-243	CABLE ASSY	2.6.0
11	S-1360-10	CKT BKR	
10	40Ω 3WATT	RESISTOR	2.11.0
9	S-1696-2	SWITCH	2.11.0
8	S-1695-1	SWITCH	2.11.0
7	S-18384-1	CONNECTOR	
6	0570084-1	JUNCTION BOX ASSY	7.5.1
5	S-1838-3	CONNECTOR	
4	28371-0009	PLUG	2.11.0
3	0770681-1	MKR BCN ANT	
2	-224	CABLE ASSY	2.12
1	31240-0014	MKR BCN RCVR	4.8

CES-1000 IS APPLICABLE VENDOR CODES PER S-1400
CES-XXXX=CESSNA SPEC. NO.
S-XXX OR CMXXXX=CESSNA STD. NO.

SUPERSEDES: 1770000 PG 2.11.1

SUPERSEDED BY:

WIRE CODE NO.	GA	MATERIAL	LG	TERMINALS		SERIALS
BLK/RED(2)	22	-22-0-2		SOLDER	SOLDER	
BLK/RED(1)	22	-22-0-4		SOLDER	SOLDER	
YEL/RED	20	-20-4-2		SOLDER	SOLDER	
TAN/YEL	22	-22-10-4			SOLDER	
TAN/WHT	22	-22-10-5			SOLDER	
TAN/BLU	22	-22-10-6			SOLDER	
RED/GRN	22	-22-2-5			S-1837-1	
GRY/YEL	22	-22-8-4			S-1837-1	
GRY/BLU	22	-22-8-6			SOLDER	
GRN/BLU	20	-20-5-6			S-1837-1	
BLU/GRN	22	-22-6-5			S-1837-1	
BLU	22	-22-6			S-1837-1	
BLK/YEL(3)	22	-22-0-4			SOLDER	
BLK/YEL(2)	22	-22-0-4			SOLDER	
BLK/YEL(1)	22	-22-0-4			SOLDER	
BLK(2)	22	-22-0		SOLDER	S-1367-1-8	
BLK(1)	22	-22-0		SOLDER	S-1367-1-8	

WIRE TABLE

CONTRACT NO:

	NAME	DATE
DESIGN	SIPES VR	1/29/68
GROUP	H. Wind	4-29-68
DRAWN	HARRIS	4-27-68
CHECK	G. IRVIN	4-27-68
STRESS	TULLIS	4-29-68
PROJECT	Ed Mosby	4-30-68
APPD	SWANEY	4-27-68

Cessna AIRCRAFT CO.
COMMERCIAL AIRCRAFT DIV.
5800 E. PAWNEE
WICHITA, KANSAS

TITLE
WIRING DIAGRAM —
CESSNA 300 MARKER BEACON
(TYPE 502B)

SIZE	CODE IDENT. NO.	DWG NO.
C	71379	1770000

SCALE: NONE | 177 | PAGE: 2.11.1

ED&RR 01831 SER 1770116 IX

FORM NO. 80-21PA

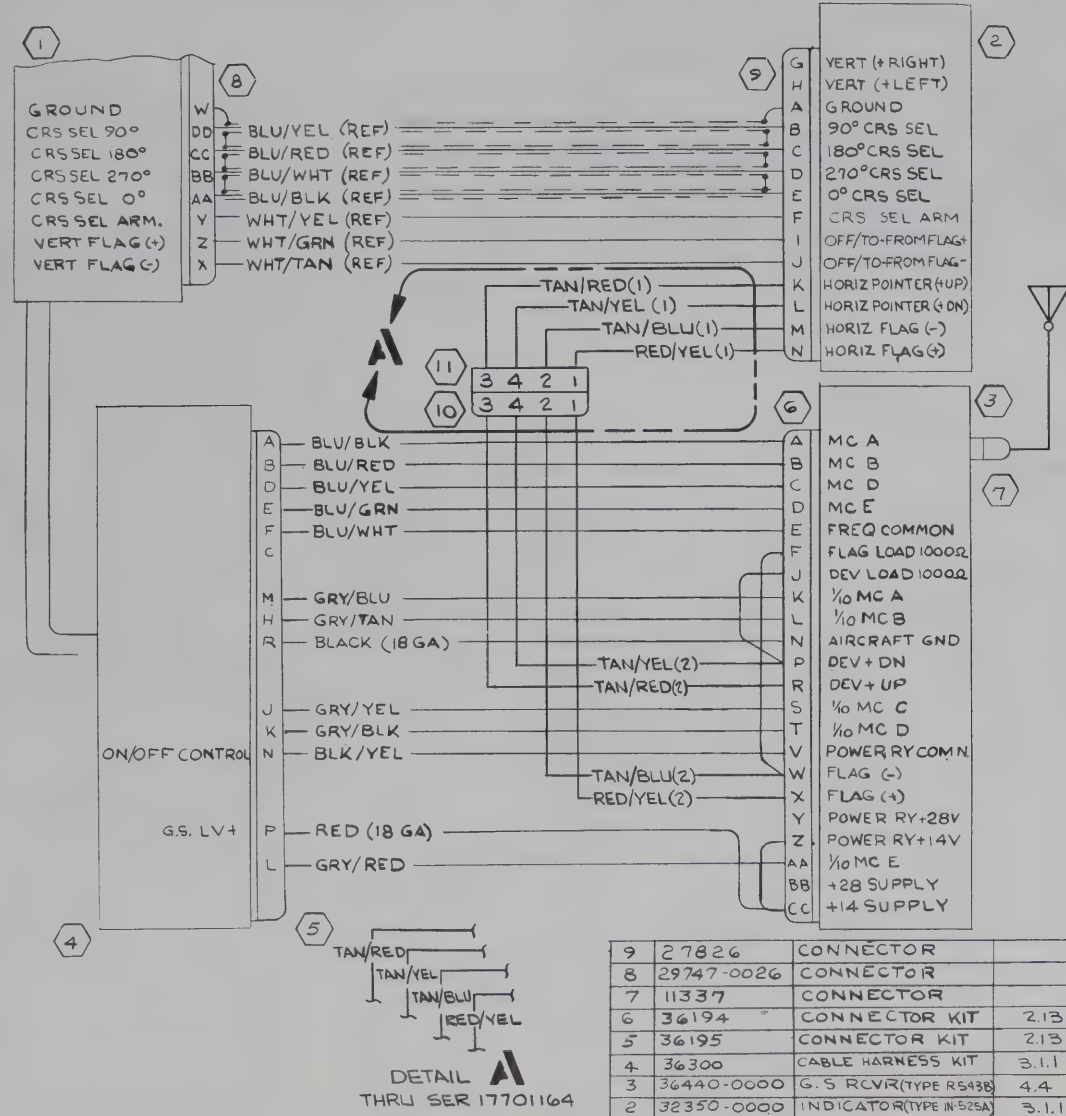

REVISION			
LET	DESCRIPTION	DATE	APPD
A	BY REV: R-543B WAS R-543A; WIRING DIAGRAM - CESSNA 400 GLIDESLOPE (ARC TYPE R-543B) WAS WIRING DIAGRAM - CESSNA GLIDESLOPE (ARC TYPE R-543A) (ED&RR 00952) (SR5632)	RLY 12-7-67	MDS NW
B	BY REV: ADD DETAIL A, S-1640-9, S-1641-9, RED/YEL (1) & (2), TAN/BLU (1) & (2), TAN/RED (1) & (2) & TAN/YEL (1) & (2) ED&RR 10114 SER 17701165 & ON	JWH 10-17-68	BCA MDS DLT NW WRS DM

WIRE CODE NO.	GA	MATERIAL	LG	TERMINALS		SERIALS
TAN/YEL(2)	22	-22-10-4		SOLDER	S-1635-1	
TAN/YEL(1)	22	-22-10-4		S-1636-1	SOLDER	
TAN/RED(2)	22	-22-10-2		SOLDER	S-1635-1	
TAN/RED(1)	22	-22-10-2		S-1636-1	SOLDER	
TAN/BLU(2)	22	-22-10-6		SOLDER	S-1635-1	
TAN/BLU(1)	22	-22-10-6		S-1636-1	SOLDER	
RED/YEL(2)	22	-22-2-4		SOLDER	S-1635-1	
RED/YEL(1)	22	-22-2-4		S-1636-1	SOLDER	
BLK/YEL	22	-22-0-4		SOLDER	SOLDER	
BLACK	18	-18-0				
RED/YEL	22	-22-2-4				
RED	18	-18-2				
TAN/BLU	22	-22-10-6				
TAN/YEL	22	-22-10-4				
TAN/RED	22	-22-10-2				
GRY/TAN	22	-22-8-10				
GRY/BLU	22	-22-8-6				
GRY/YEL	22	-22-8-4				
GRY/RED	22	-22-8-2				
GRY/BLK	22	-22-8-0				
BLU/WHT	22	-22-6-9				
BLU/GRN	22	-22-6-5				
BLU/YEL	22	-22-6-4				
BLU/RED	22	-22-6-2				
BLU/BLK	22	-22-6-0		SOLDER	SOLDER	

WIRE TABLE

ITEM NO.	PART NO.	DESCRIPTION	PAGE
9	27826	CONNECTOR	
8	29747-0026	CONNECTOR	
7	11337	CONNECTOR	
6	36194	CONNECTOR KIT	2.13
5	36195	CONNECTOR KIT	2.13
4	36300	CABLE HARNESS KIT	3.1.1
3	36440-0000	G.S RCVR (TYPE R-543B)	4.4
2	32350-0000	INDICATOR (TYPE IN-525A)	3.1.1
1	37600-1114	XMTR/RCVR (TYPE R-540A)	3.1.1

EQUIPMENT TABLE

ITEM NO.	PART NO.	DESCRIPTION	PAGE
11	S-1641-9	HOUSING-SOCKET	2.13.0
10	S-1640-9	HOUSING-PIN	2.13.0

EQUIPMENT TABLE

CES-1000 IS APPLICABLE VENDOR CODES PER S-1400
CES-XXXX=CESSNA SPEC. NO.
S-XXX OR CMXXXX=CESSNA STD. NO.

SUPERSEDES:

SUPERSEDED BY:

CONTRACT NO:

	NAME	DATE
DESIGN	SIPES VR	5-19-67
GROUP	H. Wiggs	5-20-67
DRAWN	SIPES VR	5-19-67
CHECK	YAKSHAW	6-26-67
STRESS		
PROJECT	J. Wiggs	
APPD		

Cessna AIRCRAFT CO.
COMMERCIAL AIRCRAFT DIV.
5800 E. PAWNEE
WICHITA, KANSAS

TITLE
WIRING DIAGRAM — CESSNA 400 GLIDESLOPE (ARC TYPE R543B)

SIZE	CODE IDENT. NO.	DWG NO.
C	71379	1770000

SCALE: NONE | SER 17700001 & ON | PAGE: 2.13.1

FORM NO. 80-215A

REVISION			
LET	DESCRIPTION	DATE	APPD
A	BY REV: ADD WIRE FROM PIN 2 TO BLU/RED SHIELD ON T12MP-12 ED&RR 10383	DLB 2-14-69	JWH MDS

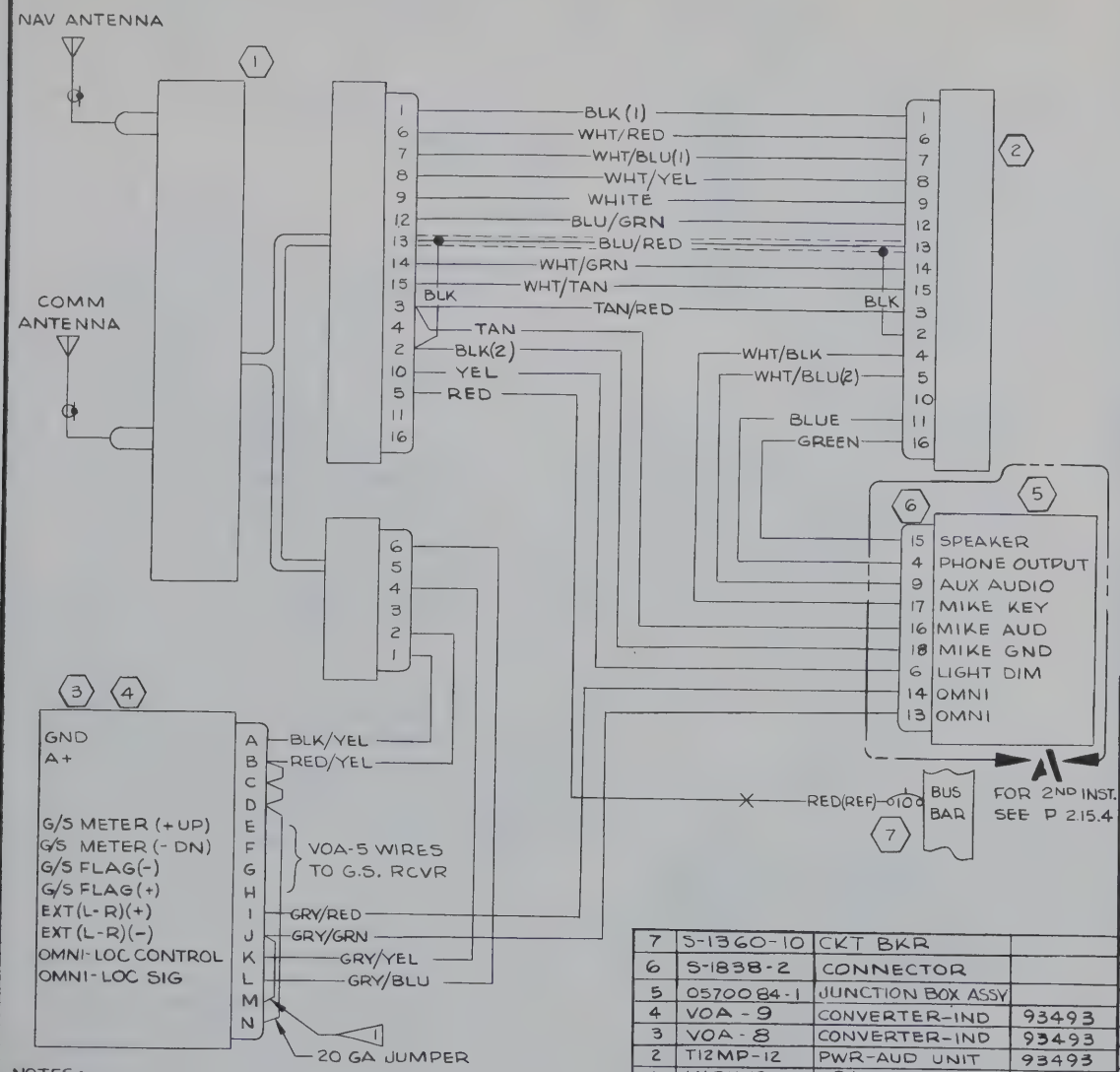

WIRE CODE NO.	GA	MATERIAL	LG	TERMINALS		SERIALS
GREEN	20	-20-5		S-1837-1	SOLDER	
GRY/BLU	22	-22-8-6		SOLDER		
GRY/YEL		-22-8-4		SOLDER		
GRY/GRN		-22-8-5		S-1557-1		
GRY/RED		-22-8-2		S-1557-1		
RED/YEL		-22-2-4		SOLDER		
BLK/YEL		-22-0-4		SOLDER		
BLACK(2)		-22-0		S-1837-1		
TAN		-22-10		S-1837-1		
WHT/TAN		-22-9-10		SOLDER		
WHT/GRN	22	-22-9-5		SOLDER		
BLU/RED	22S	-22-6-2		SOLDER		
BLU/GRN	22	-22-6-5		SOLDER		
BLUE		-22-6		S-1837-1		
WHT/YEL		-22-9-4		SOLDER		
WHT/BLU(2)		-22-9-6		S-1837-1		
WHT/RED		-22-9-2		SOLDER		
WHT/BLU(1)		-22-6-9		S-1557-1		
WHT/BLK		-22-9-0		S-1837-1		
TAN/RED	22	-22-10-2		SOLDER		
YELLOW	18	-18-4		S-1837-1		
RED	16	-16-2		S-1370-2		
BLACK(1)	16	-16-0		SOLDER		
WHITE	14	-14-9		SOLDER	SOLDER	

WIRE TABLE

ITEM NO.	PART NO.	DESCRIPTION	VENDOR
7	S-1360-10	CKT BKR	
6	S-1838-2	CONNECTOR	
5	0570084-1	JUNCTION BOX ASSY	
4	VOA-9	CONVERTER-IND	93493
3	VOA-8	CONVERTER-IND	93493
2	T12MP-12	PWR-AUD UNIT	93493
1	MARK 12	TRANSCEIVER	93493

EQUIPMENT TABLE

NOTES:
1. THIS JUMPER USED ONLY WHEN DUAL INSTALLATIONS ARE REQUIRED WITH CESSNA NAV-O-MATIC SYSTEMS

CES-1000 IS APPLICABLE
VENDOR CODES PER S-1400
CES-XXXX=CESSNA SPEC. NO.
S-XXX OR CMXXXX=CESSNA STD. NO.

SUPERSEDES: P. 2.15.1
SUPERSEDED BY:

CONTRACT NO:

	NAME	DATE
DESIGN	SIPES VR	6/10/68
GROUP	A. Wiard	7-31-68
DRAWN	E. YARBROUGH	7-22-68
CHECK	G. IRVIN	7-26-68
STRESS	TULLIS	7-31-68
PROJECT	[illegible]	
APPD	MDS	7-26-68

Cessna AIRCRAFT CO.
COMMERCIAL AIRCRAFT DIV.
5800 E. PAWNEE
WICHITA, KANSAS

TITLE
WIRING DIAGRAM — NARCO MARK 12A WITH VOA-8 & VOA-9

SIZE	CODE IDENT. NO.	DWG NO.
C	71379	1770000

SCALE: NONE | 177 | PAGE: 2.15.2

FORM NO. 60-215A

ED&RR 02394 SER 17701165

REVISION			
LET	DESCRIPTION	DATE	APPD

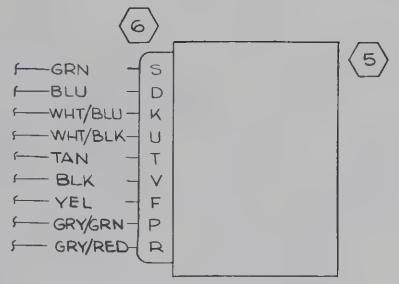

DETAIL A
2ND RADIO INSTL

WIRE CODE NO.	GA	MATERIAL	LG	TERMINALS		SERIALS

WIRE TABLE

ITEM NO.	PART NO.	DESCRIPTION
	EQUIPMENT TABLE	

CES-1000 IS APPLICABLE
VENDOR CODES PER S-1400
CES-XXXX=CESSNA SPEC. NO.
S-XXX OR CMXXXX=CESSNA STD. NO.

SUPERSEDES: P. 2.15.1

SUPERSEDED BY:

CONTRACT NO:

	NAME	DATE
DESIGN	SIPES VR	6/10/68
GROUP	H. Wise	7-31-68
DRAWN	YARBROUGH	7-24-68
CHECK	G. IRVIN	7-26-68
STRESS	FULLIS	7-31-68
PROJECT	[illegible]	8-2-68
APPD	MDS	7-26-68

Cessna AIRCRAFT CO.
COMMERCIAL AIRCRAFT DIV.
5800 E. PAWNEE
WICHITA, KANSAS

TITLE
WIRING DIAGRAM — NARCO MARK 12 WITH VOA-8 & VOA-9

SIZE	CODE IDENT. NO.	DWG NO.
C	71379	1770000

SCALE: NONE | 177 | PAGE: 2.15.4

FORM NO. 80-215A

SER 17700001 & ON

CHG LET	REVISION	BY DATE	CHK APPD

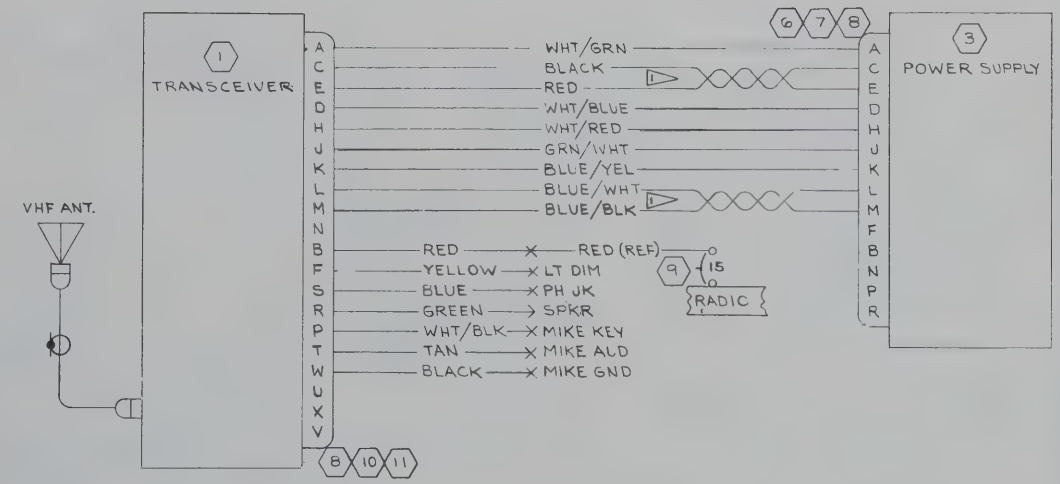

NOTES:

1. WIRES TO BE TWISTED TOGETHER TO FORM A TWISTED PAIR.

ITEM NO	PART NO.	DESCRIPTION	INSTALLED ON
11	030-1010-00	HOOD (KG)	
10	030-2002-00	RECEPTACLE (KG)	
9	S-1360-15	CIRCUIT BREAKER	
8	030-1008-00	LEVER & PIVOT ASSY (KG)	
7	030-1009-00	HOOD (KG)	
6	030-2000-00	RECEPTACLE (KG)	
5			
4			
3	KS-501(A)	POWER SUPPLY (KG)	
2			
1	KY-95E	TRANSCEIVER (KG)	

EQUIPMENT TABLE

WIRE CODE NO.	GA	MATERIAL	LG	TERMINALS		SERIALS
BLACK	22	-22-0		SOLDER	S-1370-1	
TAN	22	-22-10			S-1370-1	
WHT/BLK	22	-22-9-0			S-1370-1	
GREEN	20	-20-5			7-341-2	
BLUE	22	-22-6			S-1370-1	
YELLOW	18	-18-4			S-1370-1	
RED	16	-16-2			S-1370-2	
BLU/BLK	22	-22-6-0			SOLDER	
BLU/WHT	22	-22-6-9				
BLU/YEL	22	-22-6-4				
GRN/WHT	20	-20-5-9				
WHT/RED	22	-22-9-2				
WHT/BLU	22	-22-9-6				
RED	16	-16-2				
BLACK	16	-16-0				
WHT/GRN	22	-22-9-5		SOLDER	SOLDER	

WIRE TABLE

CESSNA AIRCRAFT CO., COMMERCIAL AIRCRAFT DIVISION, WICHITA, KANSAS

	NAME	DATE
DRAWN	SIPES V	7/18/67
GROUP	R. Weal	7-27-67
CHECK	YAKSHAW	7-19-67
PROJ	[illegible]	7-27-67
	[illegible]	7-31-67

TITLE: WIRING DIAGRAM— KING KY-95E

Cessna.

DWG NO: 1770000

SUPERSEDED BY

MODEL: 177

REV:

PAGE: 2.17.1

FORM NO 50-1614

SER 17700001 & ON

CHG LET	REVISION	BY / DATE	CHK / APPD

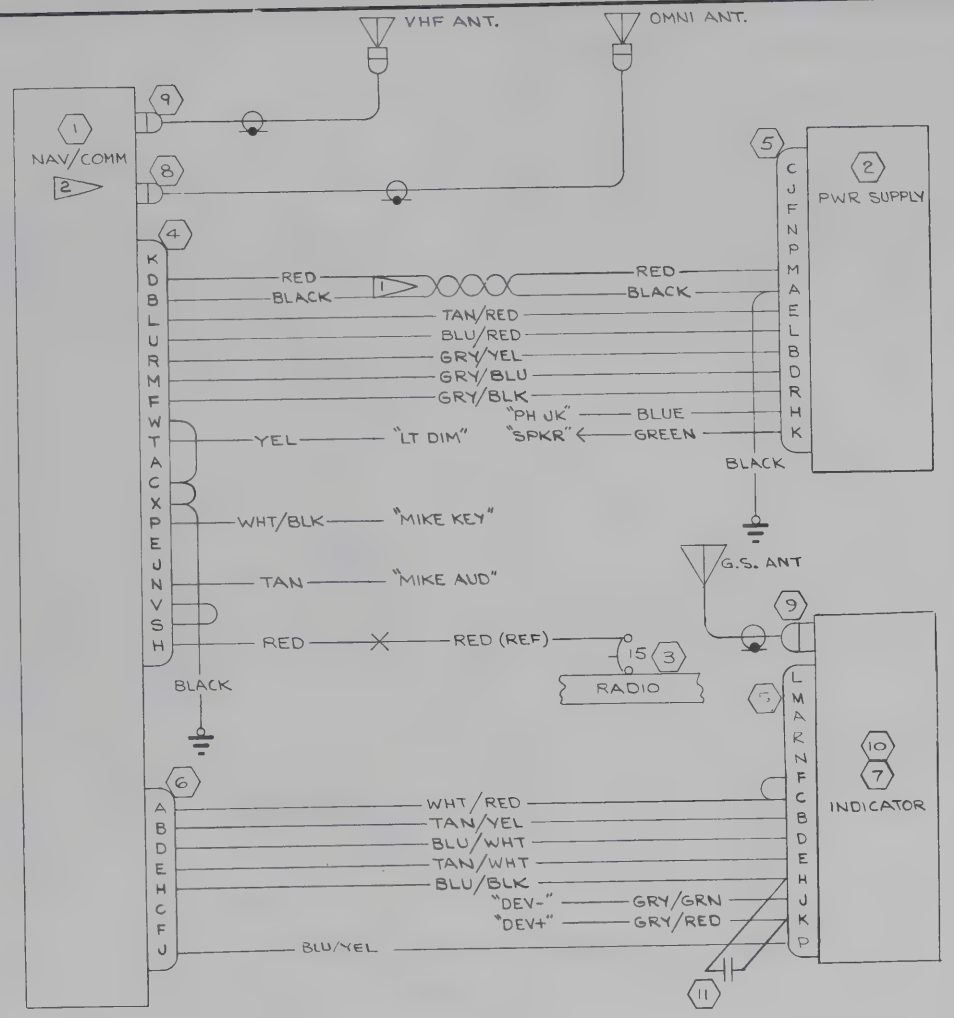

NOTES:

1. WIRES TO BE TWISTED TOGETHER TO FORM A TWISTED PAIR.
2. THE KX-160E PANEL UNIT INCLUDES A 14 PIN CONNECTOR FOR DME CHANNELING THAT IS NOT SHOWN ON THIS DIAGRAM.

ITEM NO	PART NO.	DESCRIPTION	INSTALLED ON
11	PET-1300	CAPACITOR (MAL)	
10	KI-211	INDICATOR (KG)	
9	030-0005-00	CONNECTOR (KG)	
8	030-0028-00	CONNECTOR (KG)	
7	KI-201	INDICATOR (KG)	
6	030-2044-00	CONNECTOR (KG)	
5	030-2000-00	CONNECTOR (KG)	
4	030-2002-00	CONNECTOR (KG)	
3	S-1360-15	CIRCUIT BREAKER	
2	KS-505	POWER SUPPLY	(KG)
1	KX-160E	NAV/COMM UNIT	(KG)

EQUIPMENT TABLE

WIRE CODE NO.	GA	MATERIAL	LG	TERMINALS			SERIALS
BLU/YEL	22	-22-6-4		SOLDER	SOLDER		
GRY/RED	22	-22-8-2		SOLDER	S-1557-1		
GRY/GRN	22	-22-8-5			S-1557-1		
BLU/BLK	22	-22-6-0			SOLDER		
TAN/WHT	22	-22-10-9					
BLU/WHT	22	-22-6-9					
TAN/YEL	22	-22-10-4					
WHT/RED	22	-22-9-2			SOLDER		
BLACK	22	-22-0			S-1367-1-8		
RED	16	-16-2			S-1370-2		
TAN	22	-22-10					
WHT/BLK	22	-22-9-0					
YELLOW	18	-18-4					
BLACK	22	-22-0			S-1367-1-8		
GREEN	20	-20-5			S-341-2		
BLUE	22	-22-6					
GRY/BLK	22	-22-8-0			SOLDER		
GRY/BLU	22	-22-8-6					
GRY/YEL	22	-22-8-4					
BLU/RED	22	-22-6-2					
TAN/RED	22	-22-10-2					
BLACK	16	-16-0					
RED	16	-16-2		SOLDER	SOLDER		

WIRE TABLE

CESSNA AIRCRAFT CO., COMMERCIAL AIRCRAFT DIVISION, WICHITA, KANSAS

	NAME	DATE
DRAWN	SIPES	7/19/67
GROUP	H. Wise	7-27-67
CHECK	YAKSHAW	7-19-67
PROJ	[illegible]	7-27-67
	[illegible]	7-31-67

TITLE: WIRING DIAGRAM — KING KX-160E NAV/COM

Cessna

DWG NO: 1770000

SUPERSEDED BY: | SUPERSEDES: | MODEL: 177 | REV: | PAGE: 2.18.1

FORM NO 80-161A

REVISION			
LET	DESCRIPTION	DATE	APPD
A	BY REV: DELETE GRN/YEL WIRE & GRN/RED WIRE; WHT/BLK WIRE WAS CONNECTED TO PIN 52 OF P-2; P-1 PIN 7 WAS P-1 PIN 9; DELETE NOTE #3 ED&RR 10050 [illegible]	9-5-68 DGP	LCA MDS [illegible]
B	BY REV: DELETE BLU WIRE, PIN 51 OF P-2, S-1102-1; ADD PIN 24 & 52 OF P-2, WHT/YEL, WHT/GRN (2); WHT/GRN (1) WAS WHT/GRN ED&RR 10190 SER 17701165	SDP 10/14/68	JWH MDS DET [illegible]

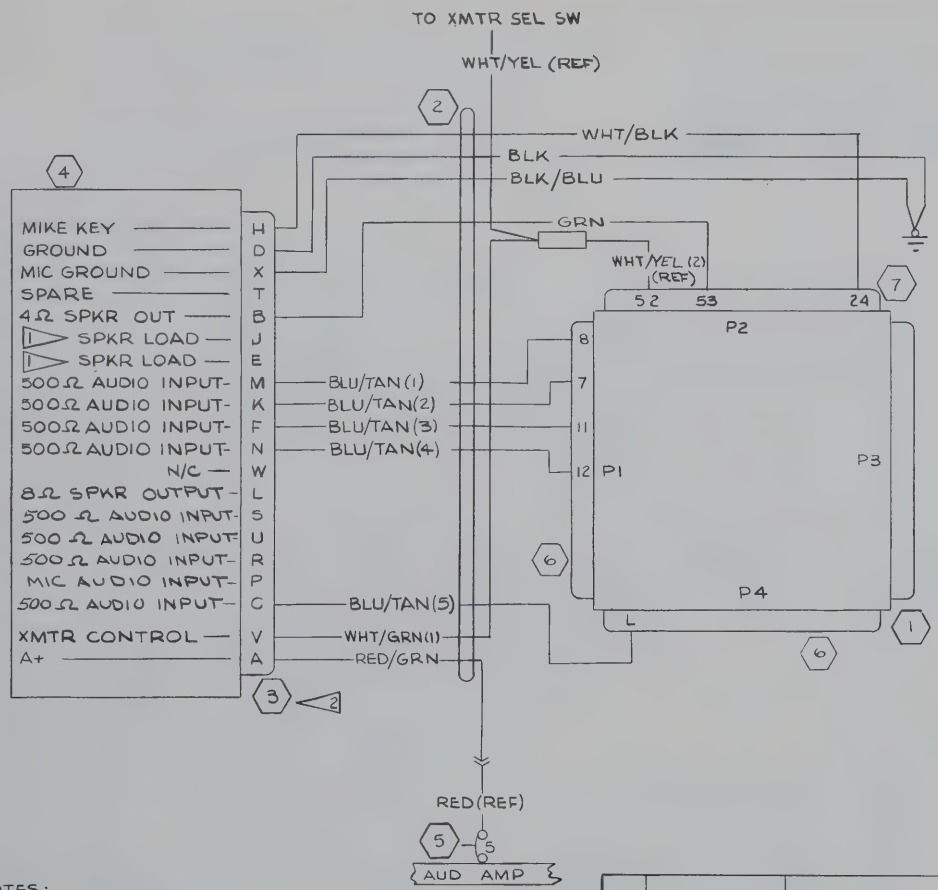

NOTES:

1. THESE CIRCUITS PROVIDE A 4Ω, 5 WATT SPEAKER LOAD WHEN REQ'D BY THE RADIO INSTL
2. CONNECTOR IS FURNISHED WITH KA-25C
3. ~~TERMINAL BLOCK NO.S TO BE STAMPED ON WIRES PER CES 1015~~

WIRE CODE NO.	GA	MATERIAL	LG	TERMINALS			SERIALS
WHT/BLK	22	-22-9-0		S-1837-1	SOLDER		
RED/GRN	20	-20-2-5		S-341-2	SOLDER		
WHT/YEL (2)	22	-22-9-4		S-1837-1	S-1370-2		
WHT/YEL	22	-22-9-4		SOLDER	S-1370-2		
GRN	20	-20-5		S-1837-1	SOLDER		
BLU/TAN (5)	22	-22-6-10					
BLU/TAN (4)	22	-22-6-10					
BLU/TAN (3)	22	-22-6-10					
BLU/TAN (2)	22	-22-6-10					
BLU/TAN (1)	22	-22-6-10		S-1837-1			
WHT/GRN (1)	22	-22-9-5		S-1370-2			
BLK/BLU	22	-22-0-6		S-1837-1			
BLK	18	-18-0		S-1837-1	SOLDER		

WIRE TABLE

ITEM NO.	PART NO.	DESCRIPTION	PAGE
7	S-1838-1	HOUSING	2.20.2
6	S-1838-2	HOUSING	2.20.2
5	S-1360-5	CIRCUIT BREAKER	
4	KA-25C	AUDIO AMPLIFIER	7.6.1
3	030-2002-00	CONNECTOR	2.20.2
2	-241	CABLE ASSY	2.20.2
1	0570084-1	JUNCTION BOX ASSY	7.5.1

EQUIPMENT TABLE

CES-1000 IS APPLICABLE
VENDOR CODES PER S-1400
CES-XXXX=CESSNA SPEC. NO.
S-XXX OR CMXXXX=CESSNA STD. NO.

SUPERSEDES: P. 2.20.1

SUPERSEDED BY:

CONTRACT NO:

	NAME	DATE
DESIGN	SIPES VR	6/10/68
GROUP	H. Wise	7-31-68
DRAWN	E YAKBROUGH	7-22-68
CHECK	G IRVIN	7-26-68
STRESS	TULLIS	7-31-68
PROJECT	[illegible]	8-[illegible]
APPD	MDS	7-26-68

Cessna AIRCRAFT CO.
COMMERCIAL AIRCRAFT DIV.
5800 E. PAWNEE
WICHITA, KANSAS

TITLE
WIRING DIAGRAM — KING KA-25C AUDIO AMPLIFIER

SIZE	CODE IDENT. NO.	DWG NO.
C	71379	1770000

SCALE: NONE | 177 | PAGE: 2.20.3

FORM NO. 80-215A

ED&RR 02394 SER 17701165

REVISION			
LET	DESCRIPTION	DATE	APPD
A	BY REV: ADD PIN 4 TO P1 & BLUE WIRE; P3 WAS P4; P4 WAS P3; PIN L WAS PIN N; PIN 7 WAS PIN 9; PIN 42 WAS PIN 11; WHT/BLU WAS BLUE/YELLOW; PIN 29 WAS PIN 59; BLUE/RED WIRE WAS BLUE; PIN 10 WAS PIN 38; PIN P WAS PIN C; PIN C WAS PIN F; REWIRE RCVR NO 2; ADD WHT/BLK WIRE, TAN WIRE, S-1637-1 & S-1637-1 EDRR 10189 SER 17701165 & ON	10-14-68 DGP	JWH MDS DET H/W

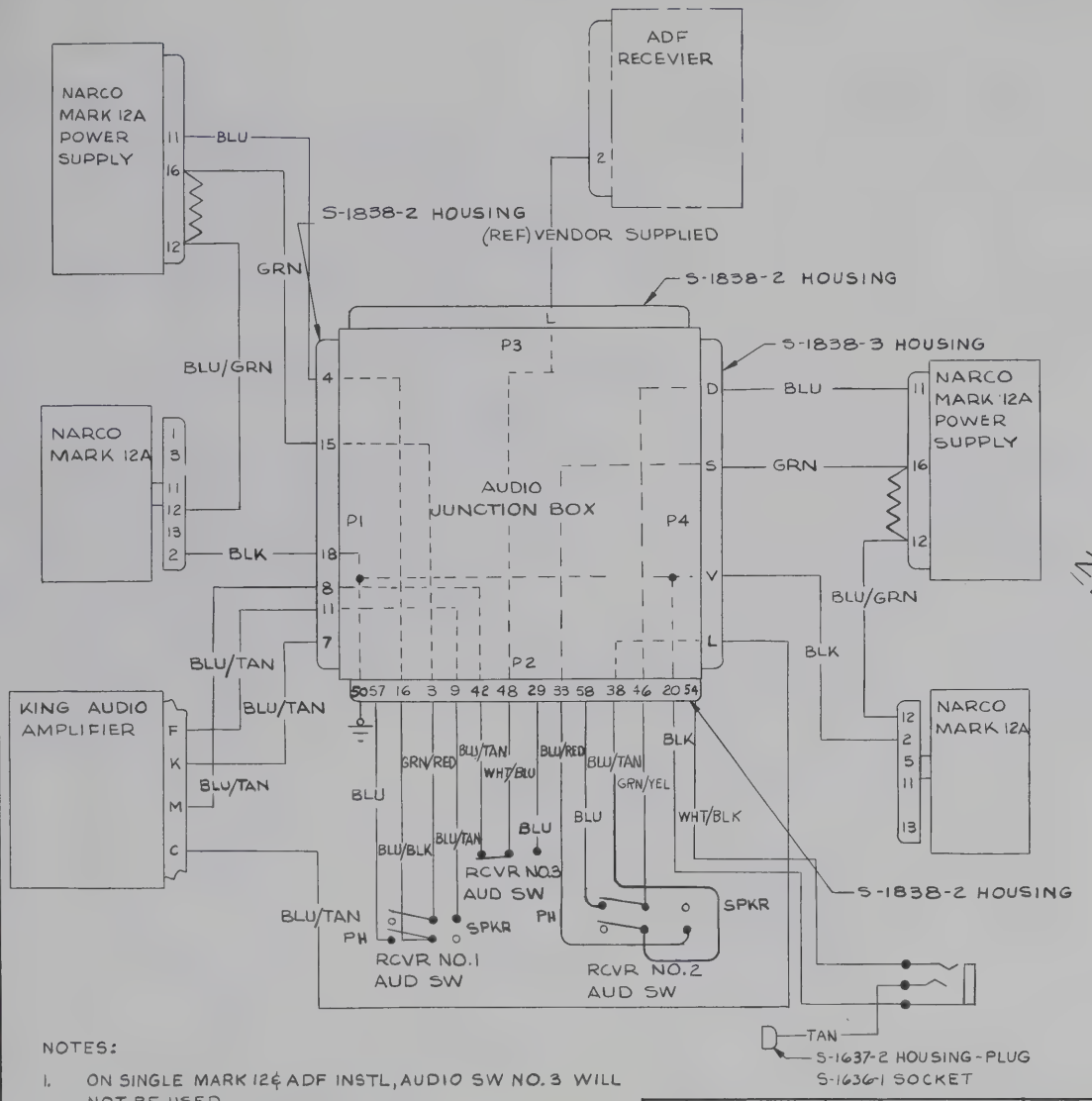

INACTIVE - EFF THRU SER 17701164 JDH 12-3-68 JWH H/W

NOTES:

1. ON SINGLE MARK 12 & ADF INSTL, AUDIO SW NO. 3 WILL NOT BE USED
2. THIS IS A REFERANCE PRINT ONLY

WIRE CODE NO.	GA	MATERIAL	LG	TERMINALS		SERIALS

WIRE TABLE

ITEM NO.	PART NO.	DESCRIPTION

EQUIPMENT TABLE

CES-1000 IS APPLICABLE
VENDOR CODES PER S-1400
CES-XXXX=CESSNA SPEC. NO.
S-XXX OR CMXXXX=CESSNA STD. NO.

SUPERSEDES: P. 2.21.0

SUPERSEDED BY: P.2.21.2.1

CONTRACT NO:

	NAME	DATE
DESIGN	SIPES VR	6/10/68
GROUP	H. Wise	7-31-68
DRAWN	E. YARBROUGH	9-22-68
CHECK	G. IRVIN	7-26-68
STRESS	TULLIS	7-31-68
PROJECT	Moody	8-2-68
APPD	MDS	7-26-68

Cessna AIRCRAFT CO.
COMMERCIAL AIRCRAFT DIV.
5800 E. PAWNEE
WICHITA, KANSAS

TITLE
WIRING DIAGRAM — TYPICAL SWITCHING, NARCO MARK 12A & ADF

SIZE	CODE IDENT. NO.	DWG NO.
C	71379	1770000

SCALE: NONE 177 PAGE: 2.21.2

FORM NO. 80-215A

ED & RR 02394 SER 17701165

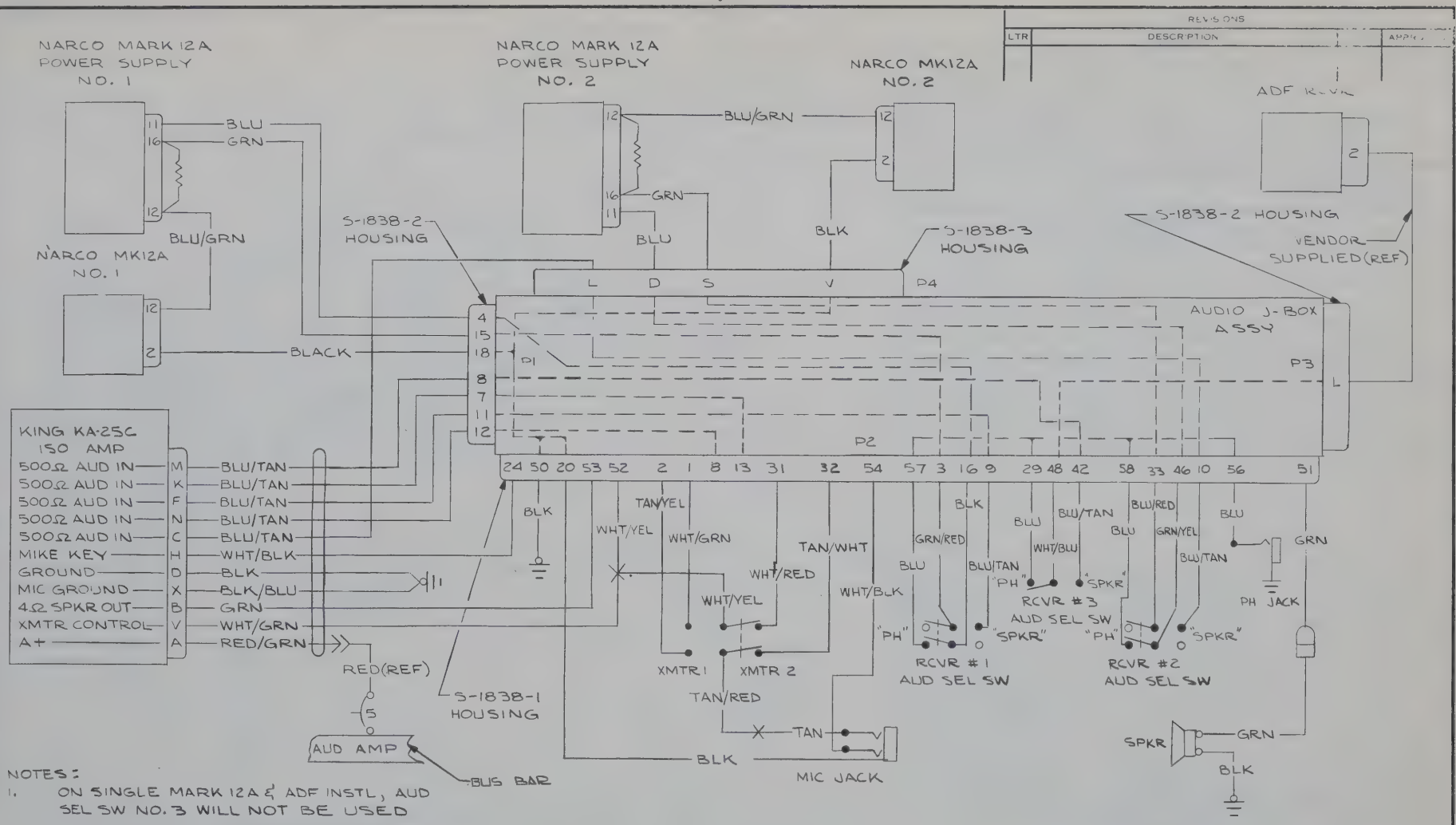

NOTES:

1. ON SINGLE MARK 12A & ADF INSTL, AUD SEL SW NO. 3 WILL NOT BE USED
2. THIS PAGE IS A REFERENCE PRINT ONLY
3. REFER TO 1770000 PAGE 2.20.3 FOR KING KA-25C ISOLATION AMPLIFIER WIRING DIAGRAM

REVISIONS

LTR	DESCRIPTION	APPR.

CONTRACT NO:		
	NAME	DATE
DESIGN	HENSHAW	12-3-68
GROUP		12-5-68
DRAWN	HENSHAW	12-3-68
CHECK	HARRIS	12-3-68
STRESS		
PROJECT		12-5-68
APPD		

SUPERSEDES: P. 2.21.2

Cessna AIRCRAFT CO.
COMMERCIAL AIRCRAFT DIV.
5800 E. PAWNEE
WICHITA, KANSAS

TITLE: WIRING DIAGRAM — TYPICAL SWITCHING, NARCO MARK 12A & ADF

SIZE	CODE IDENT. NO.	DWG NO.
C	71379	1770000

SCALE: NONE | 177 | PAGE: 2.21.2.1

FORM NO. 80-216

SER 1770165

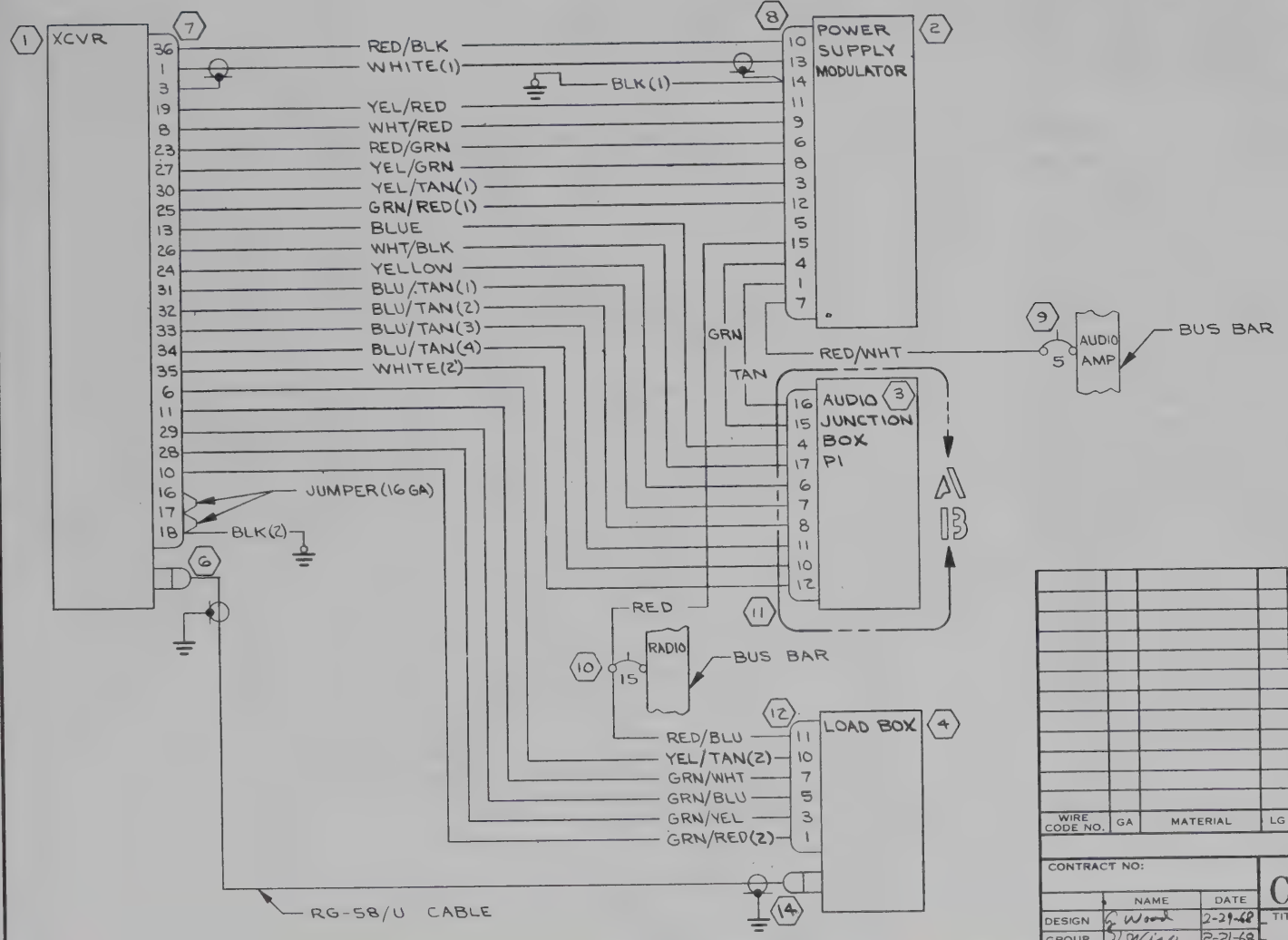

REVISION			
LET	DESCRIPTION	DATE	APPD

WIRE CODE NO.	GA	MATERIAL	LG	TERMINALS	SERIALS

WIRE TABLE

ITEM NO	PART NO.	DESCRIPTION

EQUIPMENT TABLE

CES-1000 IS APPLICABLE
VENDOR CODES PER S-1400
CES-XXXX=CESSNA SPEC. NO.
S-XXX OR CMXXXX=CESSNA STD. NO.

SUPERSEDES:

SUPERSEDED BY:

CONTRACT NO:	NAME	DATE
DESIGN	E. Wood	2-29-68
GROUP	R. Wind	2-21-68
DRAWN	C. GARCIA	2-15-68
CHECK	LAURIE RES	2-17-68
STRESS	TULLIS	2-21-68
PROJECT	Ted Mosby	3 2-61
APPD		JSM 2-20-68

Cessna AIRCRAFT CO.
COMMERCIAL AIRCRAFT DIV.
5800 E. PAWNEE
WICHITA, KANSAS

TITLE
WIRING DIAGRAM —
CESSNA 300 HF

SIZE	CODE IDENT. NO.	DWG NO.
C	71379	1770000

SCALE: NONE | 177 | PAGE: 2.23.1.1

ED/RR 01820 (SR 5440) IX

REVISION			
LET	DESCRIPTION	DATE	APPD

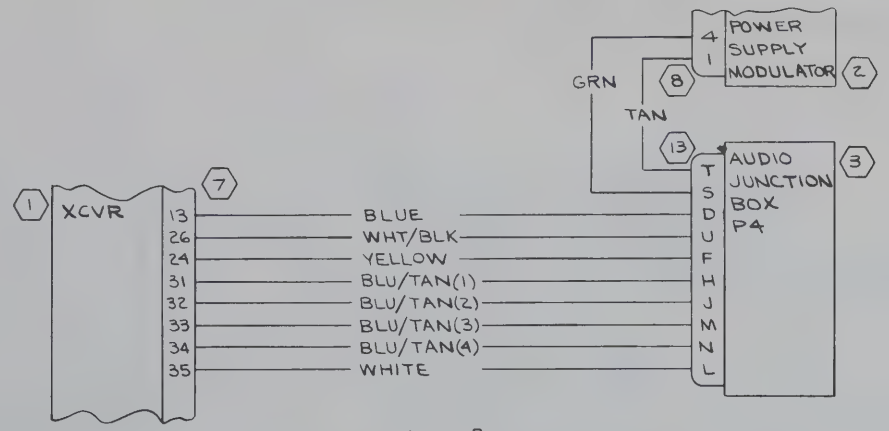

DETAIL A1
2ND INSTL

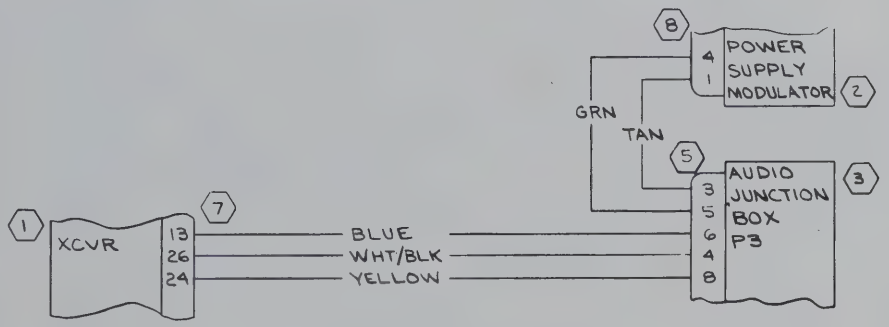

DETAIL B3
3RD INSTL
(BLU/TAN WIRES TO BE CAPPED ON 3RD INSTL)

WIRE CODE NO.	GA	MATERIAL	LG	TERMINALS		SERIALS

WIRE TABLE

ITEM NO	PART NO.	DESCRIPTION
		EQUIPMENT TABLE

CES-1000 IS APPLICABLE
VENDOR CODES PER S-1400
CES-XXXX=CESSNA SPEC. NO.
S-XXX OR CMXXXX=CESSNA STD. NO.

SUPERSEDES:

SUPERSEDED BY:

CONTRACT NO:

	NAME	DATE
DESIGN	G Wood	1-29-68
GROUP	H. Wine	2-21-68
DRAWN	C. GARCIA	2-15-68
CHECK	LAURIE REES	2-17-68
STRESS	TULLIS	2-21-68
PROJECT	Ed Murphy	3-2-68
APPD	JSM	2-20-68

Cessna AIRCRAFT CO.
COMMERCIAL AIRCRAFT DIV.
5800 E. PAWNEE
WICHITA, KANSAS

TITLE
WIRING DIAGRAM —
CESSNA 300 HF

SIZE	CODE IDENT. NO.	DWG NO.
C	71379	1770000

SCALE: NONE | 177 | PAGE: 2.23.1.2

FORM NO. 80-215A

ED&RR 01820 (SR5440) IX

REVISION			
LET	DESCRIPTION	DATE	APPD

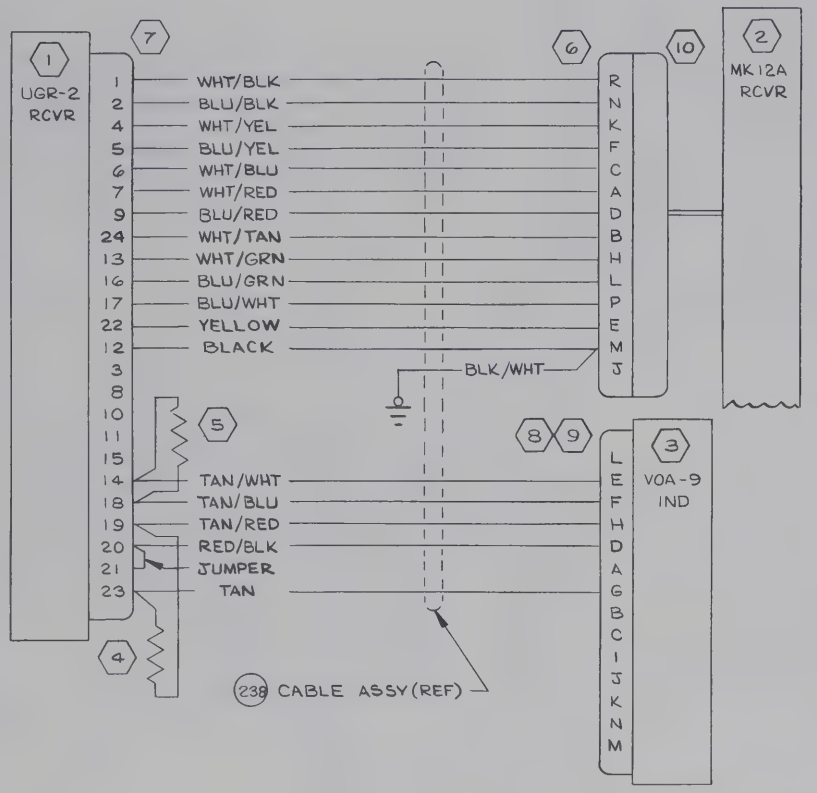

WIRE CODE NO.	GA	MATERIAL	LG	TERMINALS		SERIALS
BLK/WHT	18	-18-0-9		SOLDER	S-13671-6	
BLACK	18	-18-0			SOLDER	
YELLOW	18	-18-4				
RED/BLK	18	-18-2-0				
TAN/RED	22	-22-10-2				
TAN/BLU	22	-22-10-6				
TAN/WHT	22	-22-10-9				
BLU/WHT	22	-22-6-9				
BLU/GRN	22	-22-6-5				
BLU/RED	22	-22-6-2				
BLU/YEL	22	-22-6-4				
BLU/BLK	22	-22-6-0				
WHT/TAN	22	-22-9-10				
WHT/GRN	22	-22-9-5				
WHT/RED	22	-22-9-2				
WHT/BLU	22	-22-9-6				
WHT/YEL	22	-22-9-4				
WHT/BLK	22	-22-9-0				
TAN	22	-22-10		SOLDER	SOLDER	

WIRE TABLE

ITEM NO.	PART NO.	DESCRIPTION
10	MRA-14S	PIG TAIL (93493)
9	41228-6	CLAMP (93493)
8	41223-2	PLUG (93493)
7	41291-101	CONNECTOR (93493)
6	41247-102	CONNECTOR (93493)
5	470Ω, 1/4 WATT	RESISTOR (93493)
4	1000Ω, 1/4 WATT	RESISTOR (93493)
3	VOA-9	INDICATOR (93493)
2	MARK 12A	XCVR (93493)
1	UGR-2	RCVR (93493)

EQUIPMENT TABLE

CES-1000 IS APPLICABLE
VENDOR CODES PER S-1400
CES-XXXX=CESSNA SPEC. NO.
S-XXX OR CMXXXX=CESSNA
STD. NO.

SUPERSEDES:

SUPERSEDED BY:

CONTRACT NO:

	NAME	DATE
DESIGN	SIPES VR	4-1-68
GROUP	H. Wise	4-18-68
DRAWN	MONICAL	4-10-68
CHECK	G. IRVIN	4-15-68
STRESS	TULLIS	4-17-68
PROJECT	Ed Moody	9-30-68
APPD		

Cessna AIRCRAFT CO.
COMMERCIAL AIRCRAFT DIV.
5800 E. PAWNEE
WICHITA, KANSAS

TITLE
WIRING DIAGRAM —
NARCO UGR-2 GLIDESLOPE WITH
NARCO MARK 12A & VOA-9

SIZE	CODE IDENT. NO.	DWG NO.
C	71379	1770000

SCALE: NONE

FORM NO. 80-218A

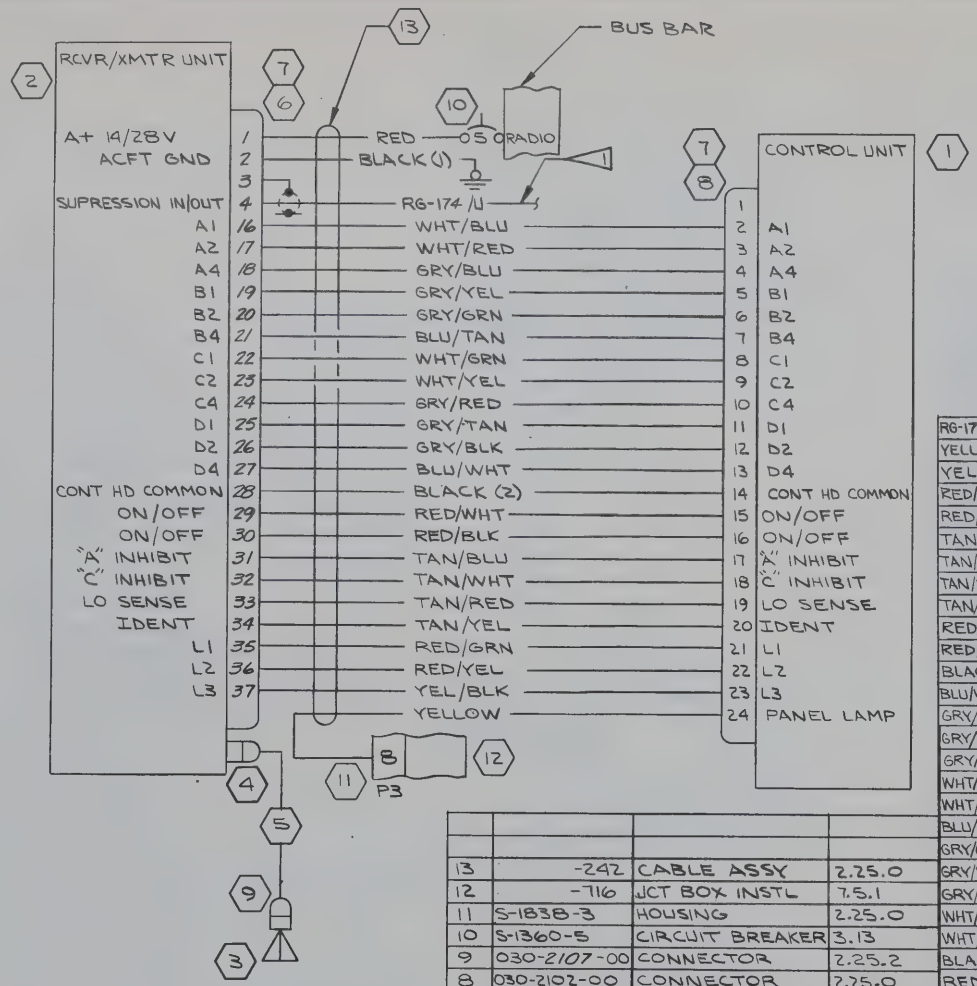

REVISION			
LET	DESCRIPTION	DATE	APPD
A	BY REV: GRY/RED WAS GRY/GRN (2), RED/WHT WAS RED (1), RED/BLK WAS RED (2), RED/YEL WAS YEL/WHT, YELLOW WAS GRY/YEL (2), GRY/YEL WAS GRY/YEL (1), GRY/GRN WAS GRY/GRN (1), RED WAS RED (3) ED&RR 10331 (SR5905)	RLY 1-23-69	JWH MDS DET APW TM

WIRE CODE NO.	GA	MATERIAL	LG	TERMINALS			SERIALS
RG-174/U		CABLE		SOLDER	◁1		
YELLOW	20	-20-4		SOLDER	S-1837-1		
YEL/BLK	22	-22-4-0			SOLDER		
RED/YEL	22	-22-2-4					
RED/GRN	22	-22-2-5					
TAN/YEL	22	-22-10-4					
TAN/RED	22	-22-10-2					
TAN/WHT	22	-22-10-9					
TAN/BLU	22	-22-10-6					
RED/BLK	18	-18-2-0					
RED/WHT	18	-18-2-9					
BLACK(2)	20	-20-0					
BLU/WHT	22	-22-6-9					
GRY/BLK	22	-22-8-0					
GRY/TAN	22	-22-8-10					
GRY/RED	22	-22-8-2					
WHT/YEL	22	-22-9-4					
WHT/GRN	22	-22-9-5					
BLU/TAN	22	-22-6-10					
GRY/GRN	22	-22-8-5					
GRY/YEL	22	-22-8-4					
GRY/BLU	22	-22-8-6					
WHT/RED	22	-22-9-2					
WHT/BLU	22	-22-9-6			SOLDER		
BLACK(1)	18	-18-0			S-1361-2-8		
RED	18	-18-2		SOLDER	S-1361-2-8		

WIRE TABLE

ITEM NO.	PART NO.	DESCRIPTION	PAGE
13	-242	CABLE ASSY	2.25.0
12	-716	JCT BOX INSTL	7.5.1
11	S-1838-3	HOUSING	2.25.0
10	S-1360-5	CIRCUIT BREAKER	3.13
9	030-2107-00	CONNECTOR	2.25.2
8	030-2102-00	CONNECTOR	2.25.0
7	030-1019-00	CA CLAMP HALF	3.13 & 4.11
6	030-2109-00	CONNECTOR	2.25.0
5	-243	CABLE ASSY	2.25.2
4	030-0060-00	CONNECTOR	2.25.2
3	C589505-0101	ANTENNA	6.11
2	C589504-0101	RCVR/XMTR UNIT 12V	4.11
1	C589503-0101	CONTROL UNIT 12V	3.13

EQUIPMENT TABLE

NOTES:

1. SUPRESSOR CABLE ROUTES WITH CABLE TO CONTROL PANEL. CENTER CONDUCTOR CONNECTS TO PIN 4 OF 300 DME CABLE & SHIELD CONNECTS TO PIN 8. CENTER CONDUCTOR TERMINATED WITH END CAP WHEN NOT USED

CES-1000 IS APPLICABLE VENDOR CODES PER S-1400 CES-XXXX=CESSNA SPEC. NO. S-XXX OR CMXXXX=CESSNA STD. NO.

SUPERSEDES:

SUPERSEDED BY:

CONTRACT NO:

	NAME	DATE
DESIGN	R SIPES	8/9/68
GROUP	A. Wise	11-12-68
DRAWN	YOUNGERS	10-29-68
CHECK	Harris	11/5/68
STRESS	TULLIS	11-8-68
PROJECT	J. Whatley	11-15-68
APPD	SWANEY	11-7-68

Cessna AIRCRAFT CO.
COMMERCIAL AIRCRAFT DIV.
5800 E. PAWNEE
WICHITA, KANSAS

TITLE
WIRING DIAGRAM — CESSNA 300 TRANSPONDER

SIZE	CODE IDENT. NO.	DWG NO.
C	71379	1770000

SCALE: NONE | 177 | PAGE: 2.25.1

FORM NO. 80-215A

ED&RR 10045 (SR5905)

REVISION			
LET	DESCRIPTION	DATE	APPD
	SEE PAGE 14.4.0 FOR REVISION		

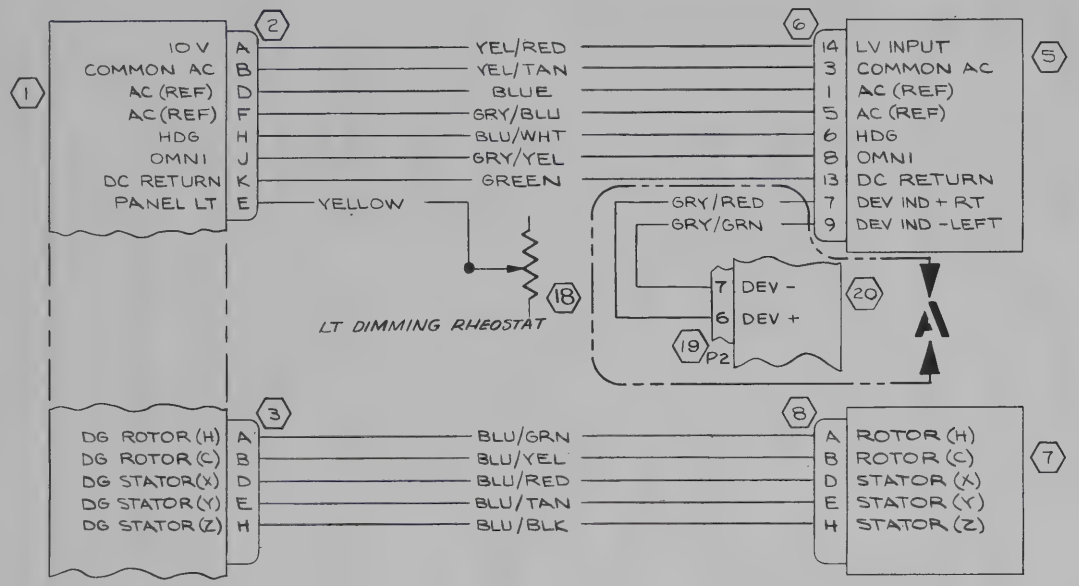

DEV + — GRY/RED — (SAME)
DEV - — GRY/GRN — (SAME)

DETAIL A
THRU SER 17701164

WIRE CODE NO.	GA	MATERIAL	LG	TERMINALS		SERIALS

WIRE TABLE

ITEM NO.	PART NO.	DESCRIPTION

EQUIPMENT TABLE

CES-1000 IS APPLICABLE
VENDOR CODES PER S-1400
CES-XXXX=CESSNA SPEC. NO.
S-XXX OR CMXXXX=CESSNA STD. NO.

SUPERSEDES: P14.2.0 & P14.2.1
SUPERSEDED BY:

	NAME	DATE
DESIGN	LAURIE	
GROUP	R. Wise	5-24-68
DRAWN	YOUNGERS	5-7-68
CHECK	G IRVIN	5-10-68
STRESS	TULLIS	5-23-68
PROJECT	T MOODY w T	5-27-68
APPD	SWANEY	5-10-68

CONTRACT NO:

Cessna AIRCRAFT CO.
COMMERCIAL AIRCRAFT DIV.
5800 E. PAWNEE
WICHITA, KANSAS

TITLE
WIRING DIAGRAM —
CESSNA 300 NAV-O-MATIC
AUTOPILOT (14VOLT)

SIZE	CODE IDENT. NO.	DWG NO.
C	71379	1770001

SCALE: NONE | 177 | PAGE: 14.4.1

FORM NO. 80-215A

EDERR 02325 (SR5751)

REVISION			
LET	DESCRIPTION	DATE	APPD

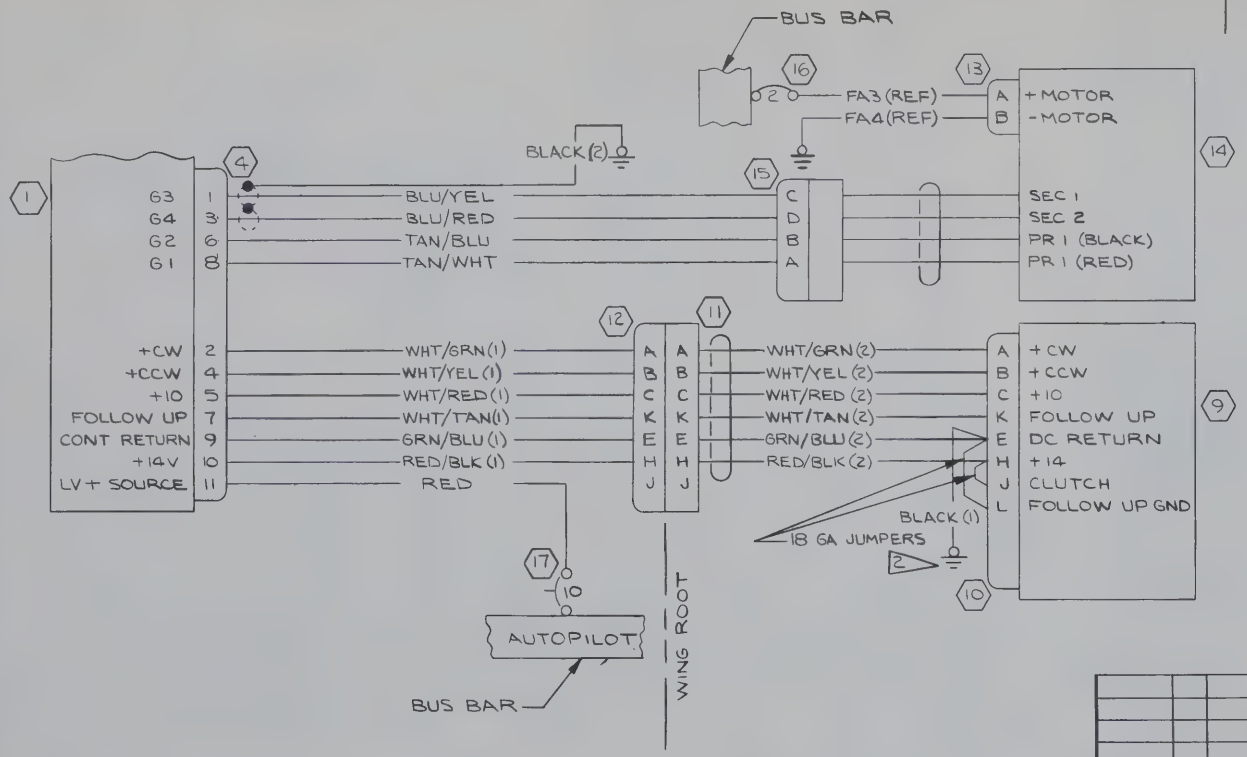

WIRE CODE NO.	GA	MATERIAL	LG	TERMINALS		SERIALS

WIRE TABLE

ITEM NO.	PART NO.	DESCRIPTION
	EQUIPMENT TABLE	

CES-1000 IS APPLICABLE
VENDOR CODES PER S-1400
CES-XXXX=CESSNA SPEC. NO.
S-XXX OR CMXXXX=CESSNA STD. NO.

SUPERSEDES: P14.2.0 & P14.2.1

SUPERSEDED BY:

CONTRACT NO:

	NAME	DATE
DESIGN	LAURIE	
GROUP	H. Wise	5-24-68
DRAWN	YOUNGERS	5-7-68
CHECK	G IRVIN	5-10-68
STRESS	TULLIS	5-23-68
PROJECT	T Moody	5-27-68
APPD	SWANEY	5-10-68

Cessna AIRCRAFT CO.
COMMERCIAL AIRCRAFT DIV.
5800 E. PAWNEE
WICHITA, KANSAS

TITLE
WIRING DIAGRAM — CESSNA 300 NAV-O-MATIC AUTOPILOT (14VOLT)

SIZE	CODE IDENT. NO.	DWG NO.
C	71379	1770001

SCALE: NONE | 177 | PAGE: 14.4.2

FORM NO. 80-215A

ED&RR 02325 (SR5751)

TABLE OF CONTENTS

180 SERIAL 18051994 & ON
185 SERIAL 185-1448 & ON

PAGE NO.	TITLE	DATE ISSUED	REV
2.0.5	W. D. - Radio Speaker, Phone Jack, Mike, Light Rheo & Pwr Circuits	10-1-68	NC
2.0.6	S. D. - Audio Junction Box, Internal Wiring	3-7-69	NC
2.3.3	W. D. - Cessna 300 Com (ARC Type 524A)	10-1-68	NC
2.8.5	W. D. - Narco Mark 12A with VOA-6, VOA-8 & VOA-9	10-1-68	NC
2.11.1	W. D. - Cessna 300 ADF (ARC Type 521B)	10-1-68	NC
2.14.2	W. D. - Cessna 300 Marker Beacon (Type 502B)	10-1-68	NC
2.16.4	Cessna 300R Nav/Com (ARC Type 514R, 515R, 515R-1, 517R & 540A)	4-16-68	NC
2.16.5	Cessna 300R Nav/Com (ARC Type 514R, 515R, 515R-1, 517R & 540A)	4-16-68	NC
2.16.7	Cessna 300R Nav/Com (ARC Type 515R-1 & 540A)	4-16-68	NC
2.23.2	W. D. - Cessna 300 DME	10-1-68	NC
2.30.3	W. D. - Cessna 400 ADF (ARC Type 324A)	9-17-68	A
2.38.2	W. D. - King KA-25C Audio Amplifier	10-1-68	A
2.41.1	Narco UGR-2 Glideslope with Narco Mark 12A & VOA-9	11-20-67	A
2.42.1	W. D. - Cessna 400 Glideslope (ARC Type R-543B)	12-20-67	A
2.43.1	W. D. - Cessna 400 Glideslope (ARC Type R-543B)	12-20-67	A
2.44.3.1	W. D. - Typical Switching, Narco Mark 12 A & ADF	12-10-68	NC
2.45.0	Cable Assembly - Audio, Omni Xmtr Selector Switches	10-1-68	B
2.45.6.1	W. D. - Audio Selector Switches	10-1-68	NC
2.45.7	W. D. - Omni Audio Xmtr Switch	10-1-68	NC
2.45.8	W. D. - Transmitter Selector Switch	10-1-68	NC
2.46	W. D. - Control Wheel Mike Switch	9-1-67	NC

TABLE OF CONTENTS

PAGE NO.	TITLE	DATE ISSUED	REV
2.47.3	W. D. - Cessna 400 Nav/Com (ARC Type RT-522 & RT-532A)	12-10-68	NC
2.47.4	W. D. - Cessna 400 Nav/Com (ARC Type RT-522 & RT-532A)	12-10-68	NC
2.48.1.1	Cessna 300 HF	1-27-69	A
2.48.1.2	Cessna 300 HF	3-1-68	NC
2.72.1	W. D. - Cessna 300 Transponder	2-3-69	A
	DRAWING NUMBER 0700092		
14.3	Omni Selector Switch (Opt.)	12-23-64	NC
14.4.1	W. D. - Cessna 300 Nav-O-Matic Autopilot (14-Volt)	7-22-68	A
14.4.2	W. D. - Cessna 300 Nav-O-Matic Autopilot (14-Volt)	6-6-68	NC

REVISION			
LET	DESCRIPTION	DATE	APPD

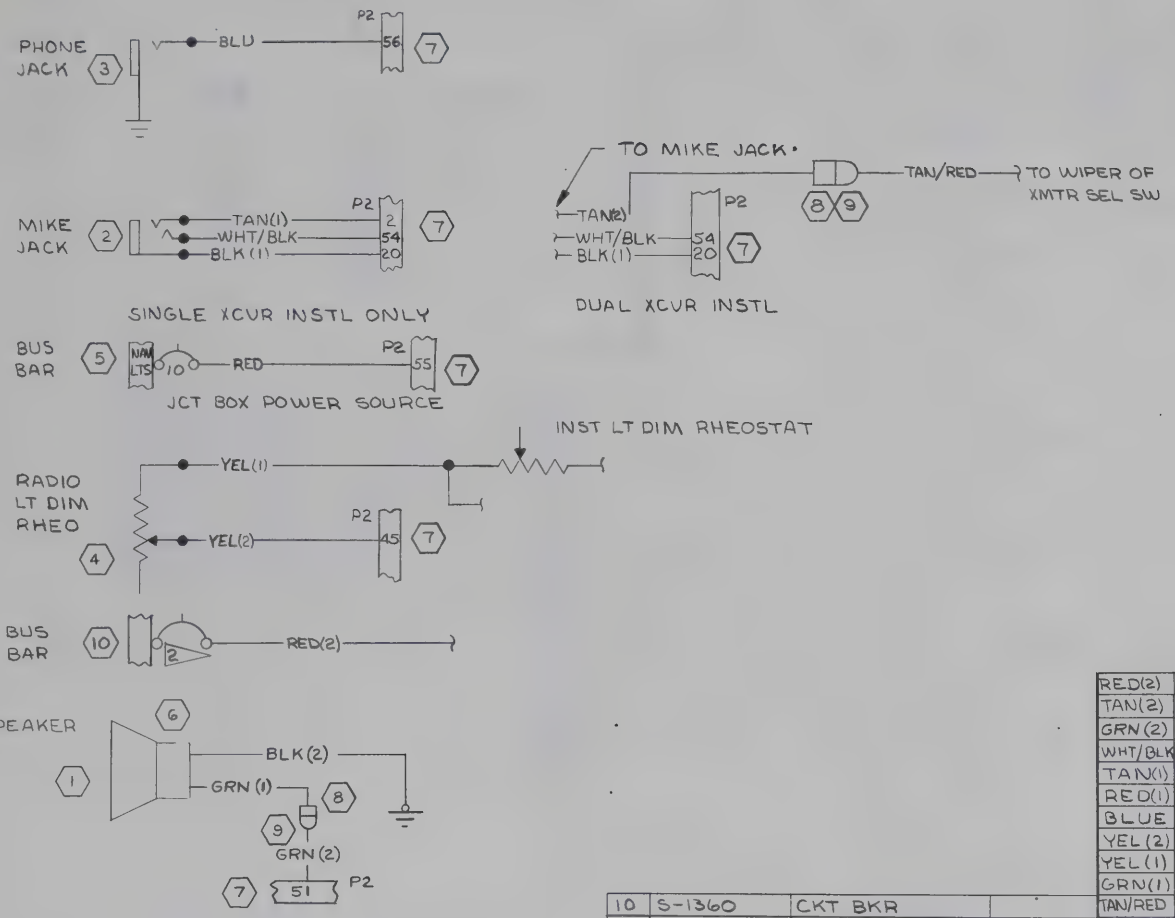

NOTES:

1. WIRES TO BE OF SUFFICIENT LENGTH TO ALLOW CONNECTION TO ALL POSSIBLE RADIO COMBINATION TERMINALS TO ATTACH TO WIRES AS REQD BY THE VARIOUS RADIO INSTALLATIONS

2. AMP RATING OF S-1360 CKT BKR TO BE DETERMINED BY INSTL

ITEM NO	PART NO.	DESCRIPTION
10	S-1360	CKT BKR
9	S-1637-2	HOUSING - PLUG
8	S-1637-1	HOUSING - CAP
7	S-1838-1	CONNECTOR
6	S-1829-1	CONNECTOR
5	S-1360-10	CIRCUIT BKR
4	0413126-5	RHEOSTAT
3	S-1612-1	PHONE JACK
2	S-1102-1	MIKE JACK
1	C596305-0101	SPEAKER

EQUIPMENT TABLE

CES-1000 IS APPLICABLE VENDOR CODES PER S-1400 . CES-XXXX=CESSNA SPEC. NO. S-XXX OR CMXXXX=CESSNA STD. NO.

SUPERSEDES: P. 2.0.1

SUPERSEDED BY:

WIRE CODE NO.	GA	MATERIAL	LG	TERMINALS		SERIALS
RED(2)	16	-16-2		S-1367-6	◁1	
TAN(2)	22	-22-10		S-1635-1	SOLDER	
GRN(2)	20	-20-5		S-1837-1	S-1636-1	
WHT/BLK	22	-22-9-0		S-1837-1	SOLDER	
TAN(1)	22	-22-10		S-1837-1	SOLDER	
RED(1)	16	-16-2		S-1837-1	S-1367-2-6	
BLUE	22	-22-6		S-1837-1	SOLDER	
YEL(2)	18	-18-4		SOLDER	S-1837-1	
YEL(1)	18	-18-4		SOLDER	SOLDER	◁1
GRN(1)	20	-20-5		S-1635-1	S-1829-1	
TAN/RED	22	-22-10-2		S-1636-1	SOLDER	
BLK(2)	22	-22-0		S-1829-1	S-1367-1-8	
BLK(1)	22	-22-0		SOLDER	S-1837-1	◁1

WIRE TABLE

CONTRACT NO:

	NAME	DATE
DESIGN	SIPES VR	9/10/68
GROUP	R Wier	9-27-68
DRAWN	RB IRWIN	9-14-68
CHECK	G. IRVIN	9-16-68
STRESS		
PROJECT		
APPD	SWANEY	9-16-68

Cessna AIRCRAFT CO.
COMMERCIAL AIRCRAFT DIV.
5800 E. PAWNEE
WICHITA, KANSAS

TITLE
WIRING DIAGRAM — RADIO SPEAKER, PHONE JACK, MIKE, LIGHT RHEO. & PWR CKTS

SIZE	CODE IDENT. NO.	DWG NO.
C	71379	0770400

SCALE: NONE | 180, 185 | PAGE: 2.0.5

FORM NO. 80-215A

ED & RR 02394 (SR5438) (SR5439) IX

REVISIONS			
LTR	DESCRIPTION	DATE	APPROVED
A	BY REV: 465195-2 WAS 46195-2, ADD NOTE 8 EDRR 24170		

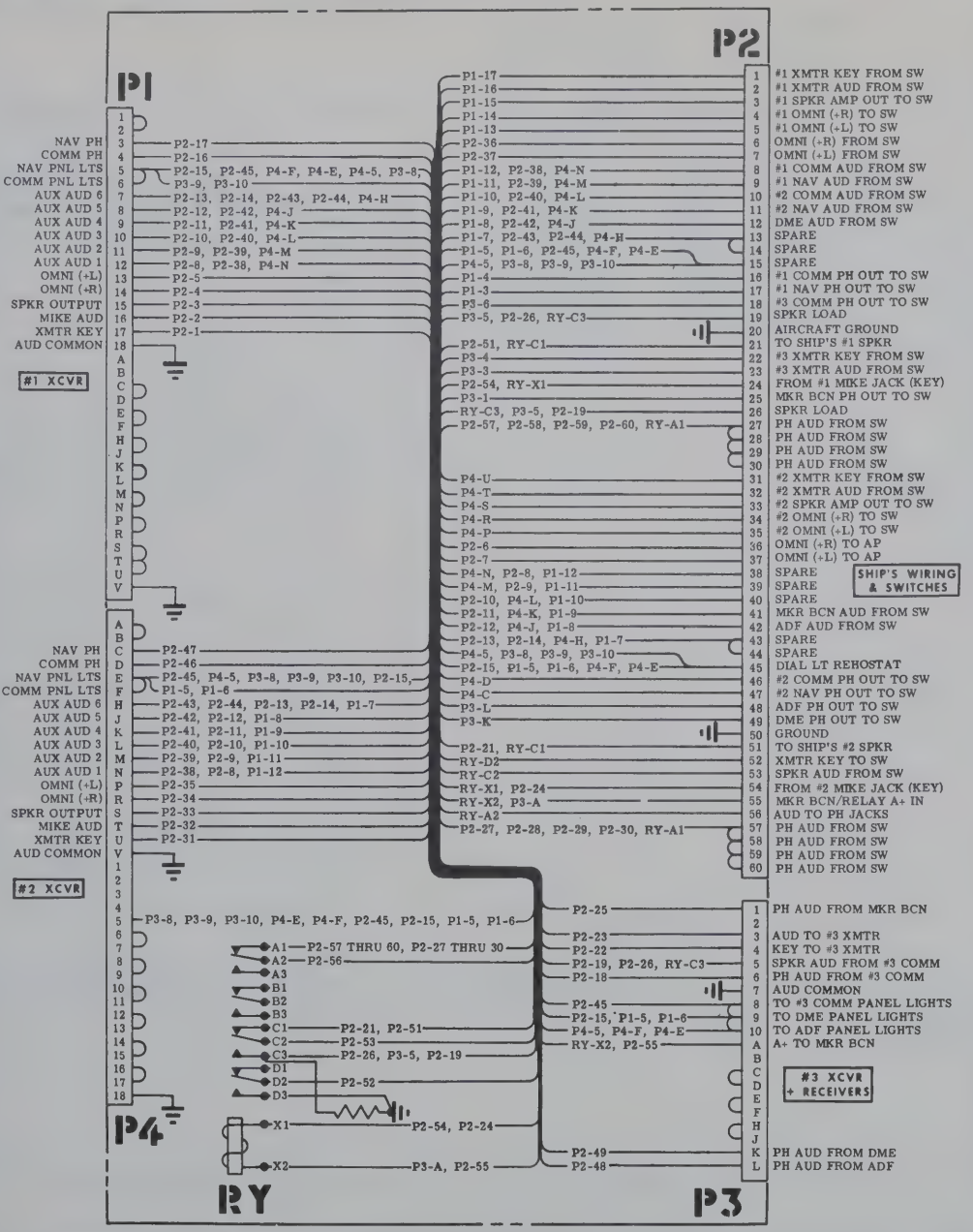

NOTES:

1. THIS DRAWING FOR TECHNICAL USE ONLY
2. P1 AND P4 MATE WITH S-1838-2 HOUSING (AMP 1-582191-5)
3. P2 MATES WITH S-1838-1 HOUSING (AMP 480146-7)
4. P3 MATES WITH S-1838-3 HOUSING (AMP 582963-2)
5. ALL THE ABOVE HOUSINGS USE S-1837-1 CONTACT PINS (AMP 42717-3LP) AND S-1836-1 KEYING PLUGS (AMP 582501-1)
6. CONTACTS CRIMP ON WITH AMP TOOL 90017
7. CONTACTS EXTRACT WITH AMP TOOL 465195-2
8. IF A CRIMPING TOOL IS NOT AVAILABLE WIRES MAY BE SOLDERED TO PINS IN LIEU OF CRIMPING

CONTRACT NO:		
	NAME	DATE
DESIGN	VRSIPES	1-13-69
GROUP	H. Wise	3-11-69
DRAWN	NUCKOLLS	2-7-69
CHECK	HARRIS	3-4-69
STRESS	Guthrie	3-7-69
PROJECT	[illegible]	3-13-69
APPD	M.D. Swaney	3-5-69

Cessna AIRCRAFT CO.
COMMERCIAL AIRCRAFT DIV.
5800 E. PAWNEE
WICHITA, KANSAS

TITLE
SCHEMATIC DIAGRAM - AUDIO JUNCTION BOX, INTERNAL WIRING

SIZE	CODE IDENT. NO.	DWG NO.
C	71379	0770400

SCALE: NONE | 180 & 185 | PAGE: 2.06

ED&RR 10361 SER 18051994 & ON
SER 185-1448 & ON

NOTES:

1. ON SINGLE CESSNA 300 COMM INSTL, RED/BLK WIRE(PIN K) IS CONNECTED TO RED/WHT WIRE (PIN S) WITH AN S-1370-1 SPLICE. WHEN 300 COMM IS INSTL WITH OTHER RADIOS, RED/WHT WIRE CONNECTS TO CKT BKR AS SHOWN; RED/BLK WIRE IS TERMINATED WITH S-1557-1 CAP
2. BLACK 16 GA WIRE IS HALVED, ½ SOLDERS TO PIN A, ½ SOLDERS TO GND LUG

REVISION			
LET	DESCRIPTION	DATE	APPD

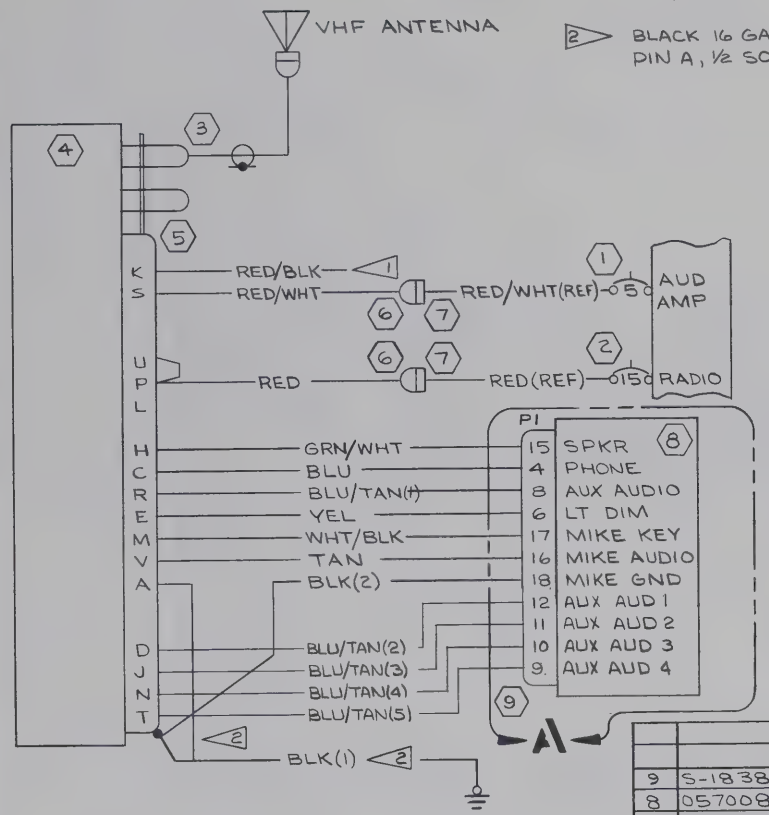

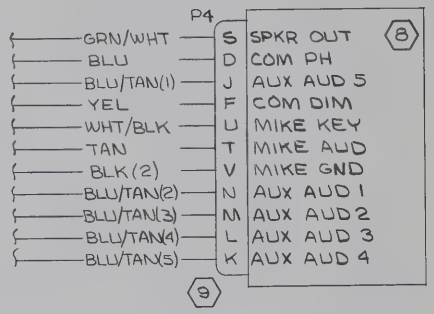

DETAIL A
2ND RADIO INSTL

ITEM NO.	PART NO.	DESCRIPTION
9	S-1838-2	CONNECTOR
8	0570084-1	JUNCTION BOX ASSY
7	S-1637-2	HOUSING-PLUG
6	S-1637-1	HOUSING-CAP
5	29747-0018	CONNECTOR
4	31390-1514	RCVR/XMTR
3	29753	CONNECTOR
2	S-1360-15	CIRCUIT BREAKER
1	S-1360-5	CIRCUIT BREAKER

EQUIPMENT TABLE

WIRE CODE NO.	GA	MATERIAL	LG	TERMINALS		SERIALS
BLU/TAN(5)	22	-22-6-10		SOLDER	S-1837-1	
BLU/TAN(4)	22	-22-6-10		↕	↕	
BLU/TAN(3)	22	-22-6-10		↕	↕	
BLU/TAN(2)	22	-22-6-10		↕	↕	
YEL	18	-18-4		SOLDER	S-1837-1	
WHT/BLK	22	-22-9-0		SOLDER	S-1837-1	
TAN	22	-22-10		SOLDER	S-1837-1	
RED/WHT	18	-18-2-9		SOLDER	S-1635-1	
RED/BLK	18	-18-2-0		SOLDER	◁1	
RED	16	-16-2		↕	S-1635-1	
GRN/WHT	20	-20-5-9		↕	S-1837-1	
BLU/TAN(1)	22	-22-6-10		↕	S-1837-1	
BLU	22	-22-6		↕	S-1837-1	
BLK(2)	22	-22-0		↕	S-1837-1	
BLK(1)	16	-16-0		SOLDER	S-1367-2-8	

WIRE TABLE

CES-1000 IS APPLICABLE
VENDOR CODES PER S-1400
CES-XXXX=CESSNA SPEC. NO.
S-XXX OR CMXXXX=CESSNA STD. NO.

SUPERSEDES: P. 2.3.2

SUPERSEDED BY:

CONTRACT NO:

	NAME	DATE
DESIGN	V R SIPES	9/20/68
GROUP	[illegible]	9-28-68
DRAWN	RB IRWIN	9-6-68
CHECK	G. IRVIN	9-16-68
STRESS	G. GUTHRIE	9-17-68
PROJECT	[illegible]	10-1-68
APPD	SWANEY	9-16-68

Cessna AIRCRAFT CO.
COMMERCIAL AIRCRAFT DIV.
5800 E. PAWNEE
WICHITA, KANSAS

TITLE
WIRING DIAGRAM—
CESSNA 300 COMM
(ARC TYPE 524A)

SIZE	CODE IDENT. NO.	DWG NO.
C	71379	0770400

SCALE: NONE | MODEL: 180, 185 | PAGE: 2.3.3

ED&RR 02394 (SR5438)(SR5439)

FORM NO. 80-215A

REVISION			
LET	DESCRIPTION	DATE	APPD

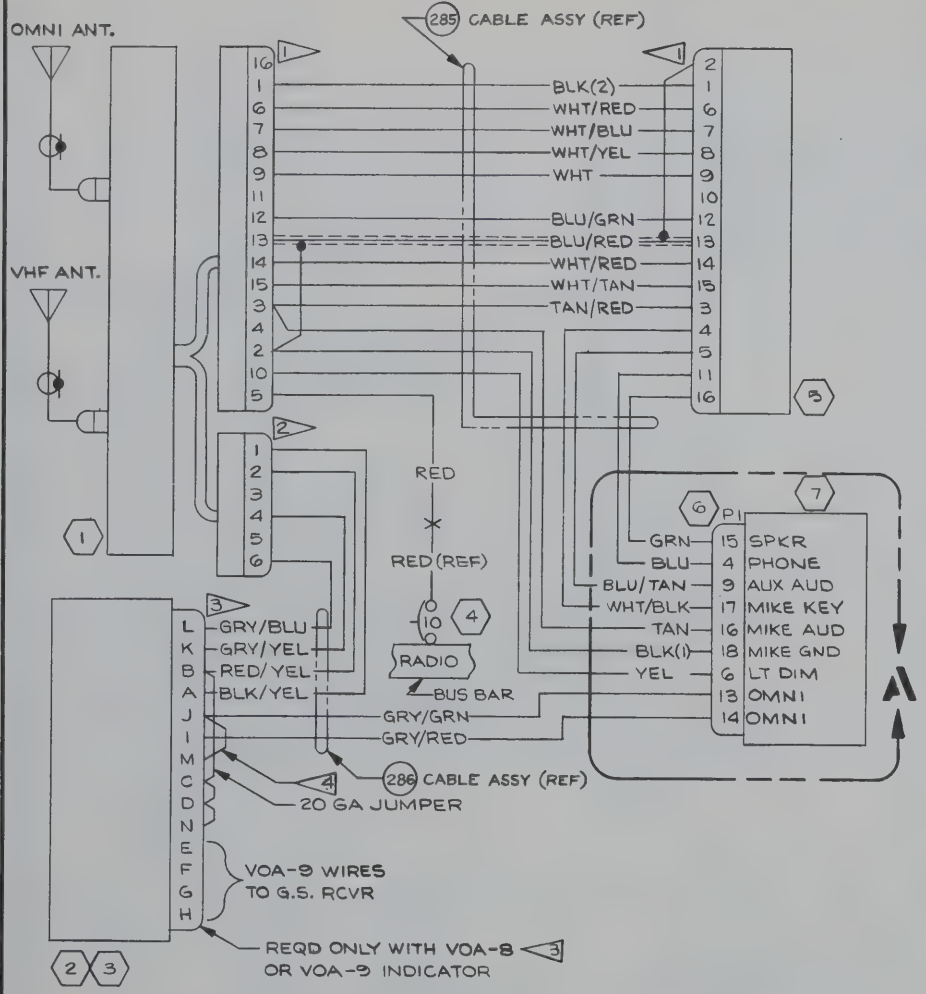

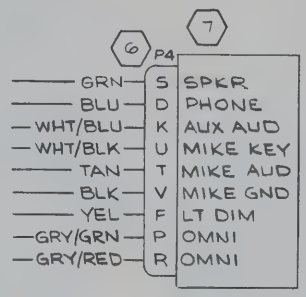

DETAIL A
2ND RADIO INSTL

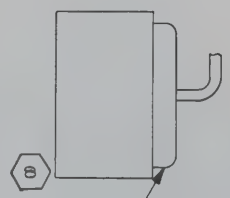

PENDANT CONN ASSY DIRECTLY TO VOA-6 IND

WIRE CODE NO.	GA	MATERIAL	LG	TERMINALS		SERIALS

WIRE TABLE

ITEM NO.	PART NO.	DESCRIPTION
		EQUIPMENT TABLE

CES-1000 IS APPLICABLE VENDOR CODES PER S-1400
CES-XXXX=CESSNA SPEC. NO.
S-XXX OR CMXXXX=CESSNA STD. NO.

SUPERSEDES: P. 2.8.2

SUPERSEDED BY:

CONTRACT NO:

	NAME	DATE
DESIGN	VR SIPES	9/10/68
GROUP	R. Wise	9-21-68
DRAWN	RB IRWIN	9-6-68
CHECK	G. IRVIN	9-16-68
STRESS	G. GUTHRIE	9-17-68
PROJECT	[illegible]	10-1-68
APPD	SWANEY	9-16-68

Cessna AIRCRAFT CO.
COMMERCIAL AIRCRAFT DIV.
5800 E. PAWNEE
WICHITA, KANSAS

TITLE
WIRING DIAGRAM — NARCO MARK 12A WITH VOA-6, VOA-8 & VOA-9

SIZE	CODE IDENT. NO.	DWG NO.
C	71379	0770400

SCALE: NONE | MODEL: 180, 185 | PAGE: 2.8.5

FORM NO. 80-215A

ED & RR 02394 (SR5438)(SR5439) IX

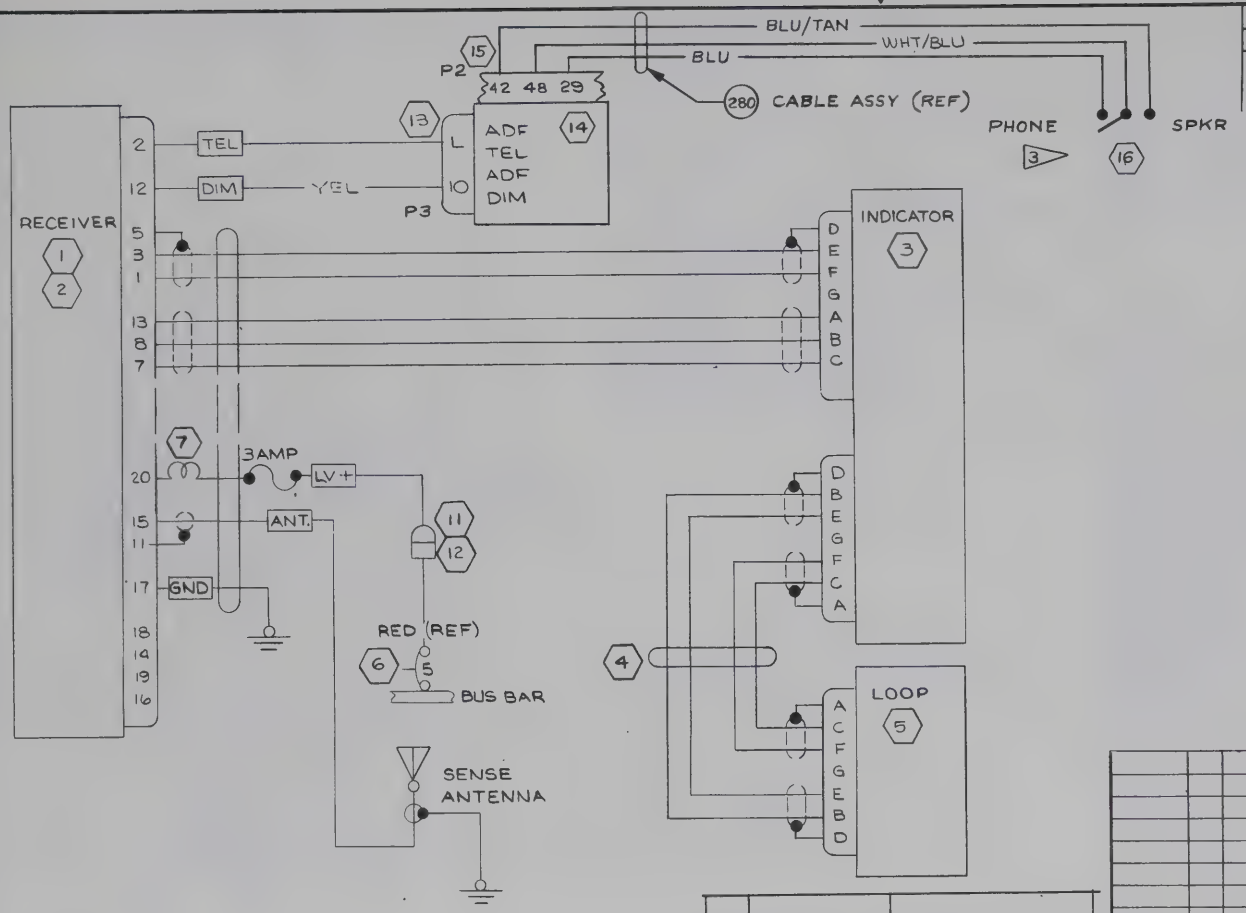

NOTES:

1. CONNECTIONS SHOWN ARE FOR TOP MOUNTING SENSE AND BOTTOM MOUNTING LOOP ANTENNA
2. ALL WIRES ARE VENDOR FURNISHED WITH RCVR EXCEPT CHOKE IN CIRCUIT BETWEEN PIN 20 & THE FUSEHOLDER WHICH MUST BE ADDED ON INSTL IN AIRCRAFT

3 SPKR FUNCTION ON KEYWAY SIDE OF SWITCH

REVISIONS			
LTR	DESCRIPTION	DATE	APPROVED

ITEM NO.	PART NO.	DESCRIPTION
16	S-1695-2	SWITCH
15	S-1838-1	CONNECTOR
14	0570084-1	JUNCTION BOX INSTL
13	S-1838-3	CONNECTOR
12	S-1637-2	HOUSING-PLUG
11	S-1637-1	HOUSING-CAP
10		
9		
8	S-1880-4	RHEOSTAT
7	A-263	CHOKE (23939)
6	S-1360-5	CIRCUIT BREAKER
5	32880-0100	LOOP ANT (00779)
4	33827-0000	LOOP CABLE (00779)
3	32680-0000	IND (ARC TYPE IN-521B)
2	28340-1400	RCVR (ARC 521A-14)
1	28340-1500	RCVR (ARC 521A-15)

EQUIPMENT TABLE

WIRE CODE NO.	GA	MATERIAL	LG	TERMINALS		SERIALS
BLU/TAN	22	-22-6-10		SOLDER	S-1837-1	
BLU/YEL	22	-22-6-4		SOLDER	S-1837-1	
BLU	22	-22-6		SOLDER	S-1837-1	

WIRE TABLE

CONTRACT NO:

	NAME	DATE
DESIGN	V R SIPES	9/10/68
GROUP	R. Wiel	9-28-68
DRAWN	RB IRWIN	9-6-68
CHECK	G. IRWIN	9-16-68
STRESS	G. GUTHRIE	9-17-68
PROJECT		10-1-68
APPD	SWANEY	9-16-68

SUPERSEDES: P. 2.11

Cessna AIRCRAFT CO.
COMMERCIAL AIRCRAFT DIV.
5800 E. PAWNEE
WICHITA, KANSAS

TITLE
WIRING DIAGRAM —
CESSNA 300 ADF
(ARC TYPE 521B)

SIZE	CODE IDENT. NO.	DWG NO.
C	71379	0770400

SCALE: NONE | 180, 185 | PAGE: 2.11.1

FORM NO 80-215

ED&RR 02394 (SR543A)(SR543A) TX

NOTES :

1. "PHONE" & "LO" FUNCTION TO BE ON KEY - WAY SIDE OF SW

REVISION			
LET	DESCRIPTION	DATE	APPD

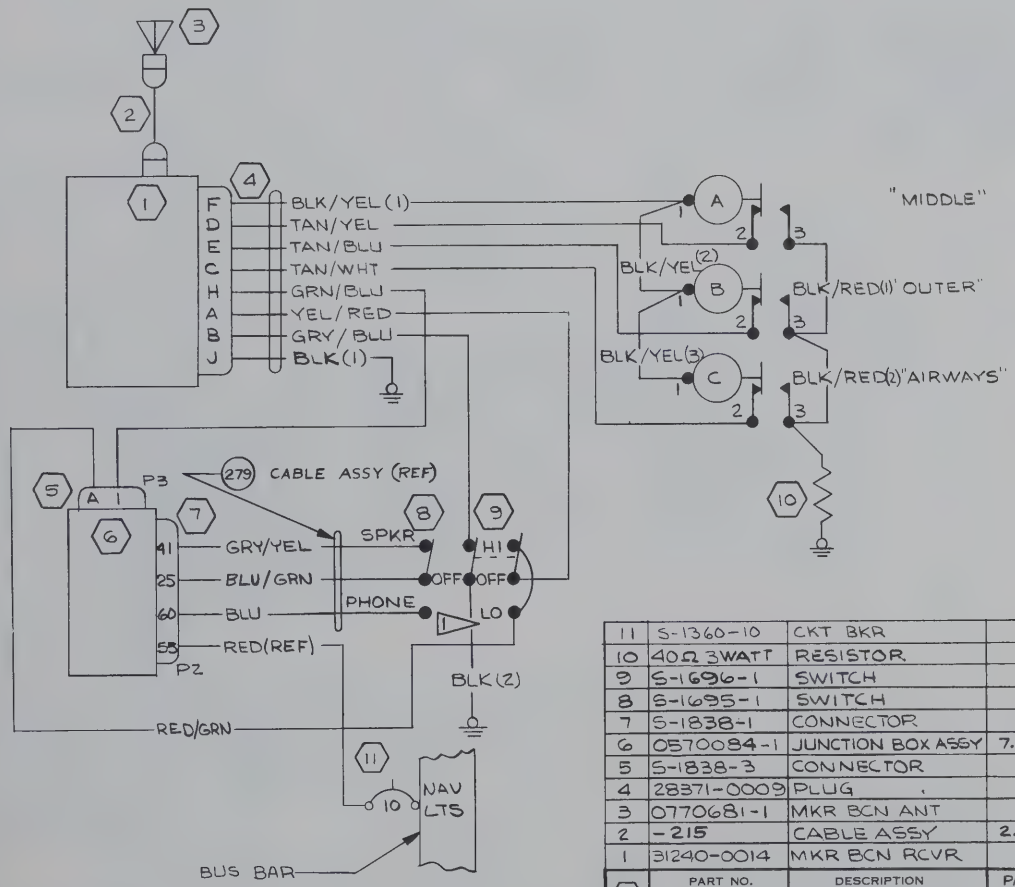

ITEM NO.	PART NO.	DESCRIPTION	PAGE
11	S-1360-10	CKT BKR	
10	40Ω 3WATT	RESISTOR	
9	S-1696-1	SWITCH	
8	S-1695-1	SWITCH	
7	S-1838-1	CONNECTOR	
6	0570084-1	JUNCTION BOX ASSY	7.18
5	S-1838-3	CONNECTOR	
4	28371-0009	PLUG	
3	0770681-1	MKR BCN ANT	
2	-215	CABLE ASSY	2.15
1	31240-0014	MKR BCN RCVR	

EQUIPMENT TABLE

CES-1000 IS APPLICABLE VENDOR CODES PER S-1400
CES-XXXX=CESSNA SPEC. NO.
S-XXX OR CMXXXX=CESSNA STD. NO.

SUPERSEDES: P. 2.13 & 2.14.1

SUPERSEDED BY:

WIRE CODE NO.	GA	MATERIAL	LG	TERMINALS		SERIALS
BLK/RED(2)	22	-22-0-2		SOLDER	SOLDER	
BLK/RED(1)	22	-22-0-2		SOLDER	SOLDER	
YEL/YEL	20	-20-4-2		SOLDER	SOLDER	
TAN/YEL	22	-22-10-4			SOLDER	
TAN/WHT	22	-22-10-3			SOLDER	
TAN/BLU	22	-22-10-6			SOLDER	
RED/GRN	20	-20-2-5			S-1837-1	
BLU/GRN	22	-22-6-5			S-1837-1	
GRY/BLU	22	-22-8-6			SOLDER	
GRN/BLU	20	-20-5-6			S-1837-1	
GRY/YEL	22	-22-8-4			S-1837-1	
BLU	22	-22-6			S-1837-1	
BLK/YEL(3)	22	-22-0-4			SOLDER	
BLK/YEL(2)	22	-22-0-4			SOLDER	
BLK/YEL(1)	22	-22-0-4			SOLDER	
BLK (2)	22	-22-0		SOLDER	S-1367-1-8	
BLK (1)	22	-22-0		SOLDER	S-1367-1-8	

WIRE TABLE

CONTRACT NO:

	NAME	DATE
DESIGN	SIPES VR	9/11/68
GROUP	R. Wiel	9-28-68
DRAWN	RB IRWIN	9-6-68
CHECK	G. IRWIN	9-16-68
STRESS	G GUTHRIE	9-12-68
PROJECT	[illegible]	10 1-68
APPD	SWANEY	9-16-68

Cessna AIRCRAFT CO.
COMMERCIAL AIRCRAFT DIV.
5800 E. PAWNEE
WICHITA, KANSAS

TITLE
WIRING DIAGRAM —
CESSNA 300 MARKER BEACON
(TYPE 502B)

SIZE	CODE IDENT. NO.	DWG NO.
C	71379	0770400

SCALE: NONE | MODEL: 180, 185 | PAGE: 2.14.2

FORM NO. 80-215A

ED & RR 02394 (SR5438) (SR5439) IX

REVISION			
LET	DESCRIPTION	DATE	APPD

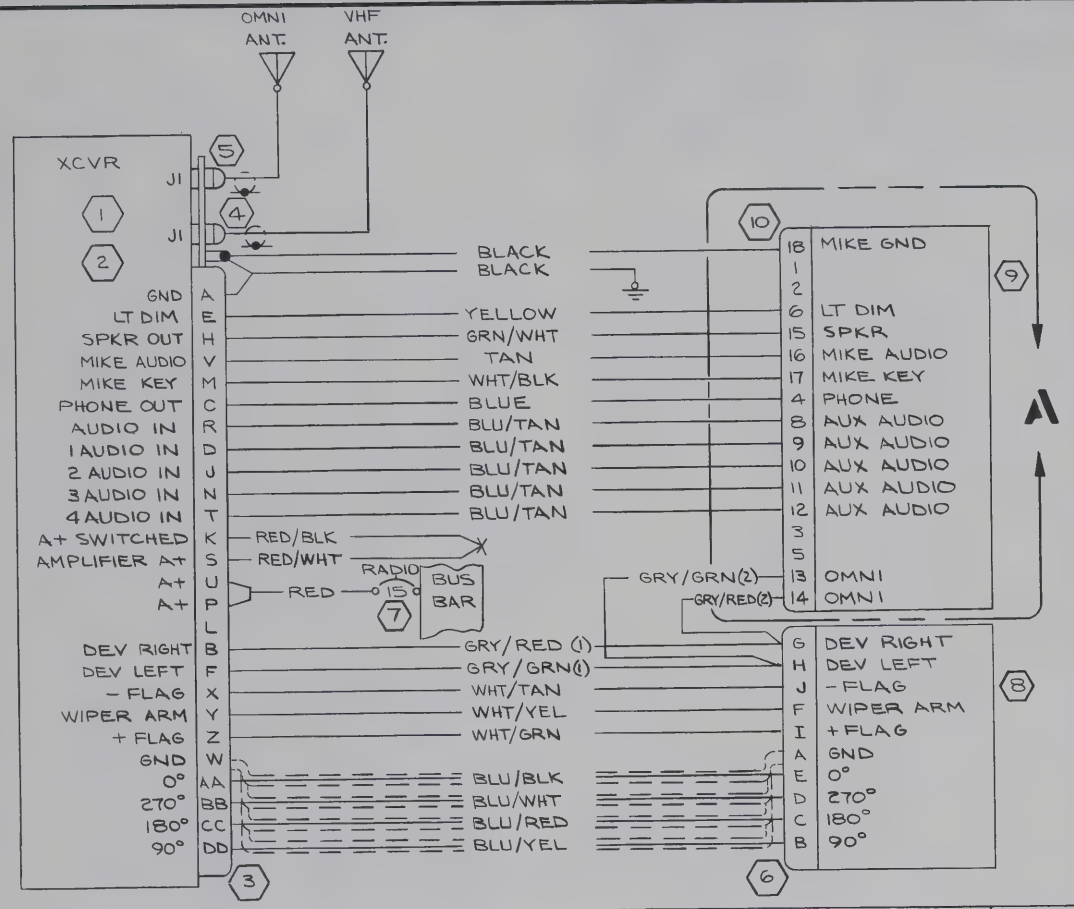

WIRE CODE NO.	GA	MATERIAL	LG	TERMINALS		SERIALS
BLACK	22	-22-0		SOLDER	S-1837-1	
BLACK	16	-16-0			S-1367-2-8	
YELLOW	18	-18-4			S-1837-1	
GRN/WHT	20	-20-S-9			S-1837-1	
TAN	22	-22-10			S-1837-1	
WHT/BLK	22	-22-9-0			S-1837-1	
BLUE	22	-22-6			S-1837-1	
BLU/TAN	22	-22-6-10			S-1837-1	
BLU/TAN	22	-22-6-10			S-1837-1	
BLU/TAN	22	-22-6-10			S-1837-1	
BLU/TAN	22	-22-6-10			S-1837-1	
BLU/TAN	22	-22-6-10			S-1837-1	
RED/BLK	18	-18-2-0			S-1370-1	
RED/WHT	18	-18-2-9				
RED	16	-16-2			S-1367-2-8	
GRY/RED(2)	22	-22-8-2			S-1837-1	
GRY/GRN(2)	22	-22-8-5			S-1837-1	
GRY/RED(1)	22	-22-8-2			SOLDER	
GRY/GRN(1)	22	-22-8-5				
WHT/TAN	22	-22-9-10				
WHT/YEL	22	-22-9-4				
WHT/GRN	22	-22-9-5				
BLU/BLK	22	-22-6-0				
BLU/WHT	22	-22-6-9				
BLU/RED	22	-22-6-2				
BLU/YEL	22	-22-6-4		SOLDER	SOLDER	

WIRE TABLE

ITEM NO.	PART NO.	DESCRIPTION
10	S-1838-2	CONNECTOR
9	0570084-1	JUNCTION BOX
8	31640-0000	IND (ARC TYPE IN514R)
7	S-1360-15	CIRCUIT BREAKER
6	32604	CONNECTOR (00781)
5	29752	CONNECTOR (00781)
4	29753	CONNECTOR (00781)
3	29747-0026	CONNECTOR (00781)
2	34640-1114	XCVR (ARC TYPE 515R)
1	32580-1114	XCVR (ARC TYPE 514R-1)

EQUIPMENT TABLE

CES-1000 IS APPLICABLE VENDOR CODES PER S-1400
CES-XXXX=CESSNA SPEC. NO.
S-XXX OR CMXXXX=CESSNA STD. NO.

SUPERSEDES: P2.16.1

SUPERSEDED BY:

CONTRACT NO:

	NAME	DATE
DESIGN		
GROUP	R. Wise	4-3-68
DRAWN	YOUNGERS	3-29-68
CHECK	G. IRVIN	4-1-68
STRESS	ARN	4-2-68
PROJECT	DG Kolla	4-17-68
APPD	SWANEY	4-1-68

Cessna AIRCRAFT CO.
COMMERCIAL AIRCRAFT DIV.
5800 E. PAWNEE
WICHITA, KANSAS

TITLE
WIRING DIAGRAM — CESSNA 300R NAV/COM (ARC TYPE 514R, 515R, 515R-1, 517R & 540A)

SIZE	CODE IDENT. NO.	DWG NO.
C	71379	0770400

SCALE: NONE | 180, 185 | PAGE: 2.16.4

FORM NO. 80-215A

EDERR 01980 SER 180-51876 & 185-1301

REVISION			
LET	DESCRIPTION	DATE	APPD

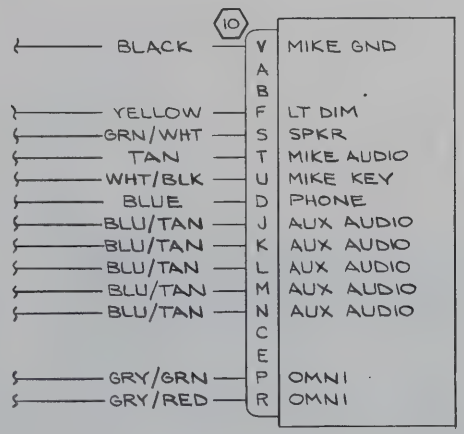

DETAIL A
2ND RADIO INSTL

WIRE CODE NO.	GA	MATERIAL	LG	TERMINALS		SERIALS

WIRE TABLE

ITEM NO.	PART NO.	DESCRIPTION
		EQUIPMENT TABLE

CES-1000 IS APPLICABLE
VENDOR CODES PER S-1400
CES-XXXX=CESSNA SPEC. NO.
S-XXX OR CMXXXX=CESSNA
STD. NO.

SUPERSEDES: P2.16.1

SUPERSEDED BY:

CONTRACT NO:

	NAME	DATE
DESIGN		
GROUP	H. Wied	4-3-68
DRAWN	YOUNGERS	3-29-68
CHECK	G. IRVIN	4-1-68
STRESS	RDW	4-2-68
PROJECT	DG Koller	4-17-68
APPD	SWANEY	4-1-68

Cessna AIRCRAFT CO.
COMMERCIAL AIRCRAFT DIV.
5800 E. PAWNEE
WICHITA, KANSAS

TITLE
WIRING DIAGRAM —
CESSNA 300R NAV/COM
(ARC TYPE 514R, 515R, 515R-1, 517R & 540A)

SIZE	CODE IDENT. NO.	DWG NO.
C	71379	0770400

SCALE: NONE | 180,185 | PAGE: 2.16.5

FORM NO. 80-215A

ED&RR 01980 SER 180-51876 & 185-1301

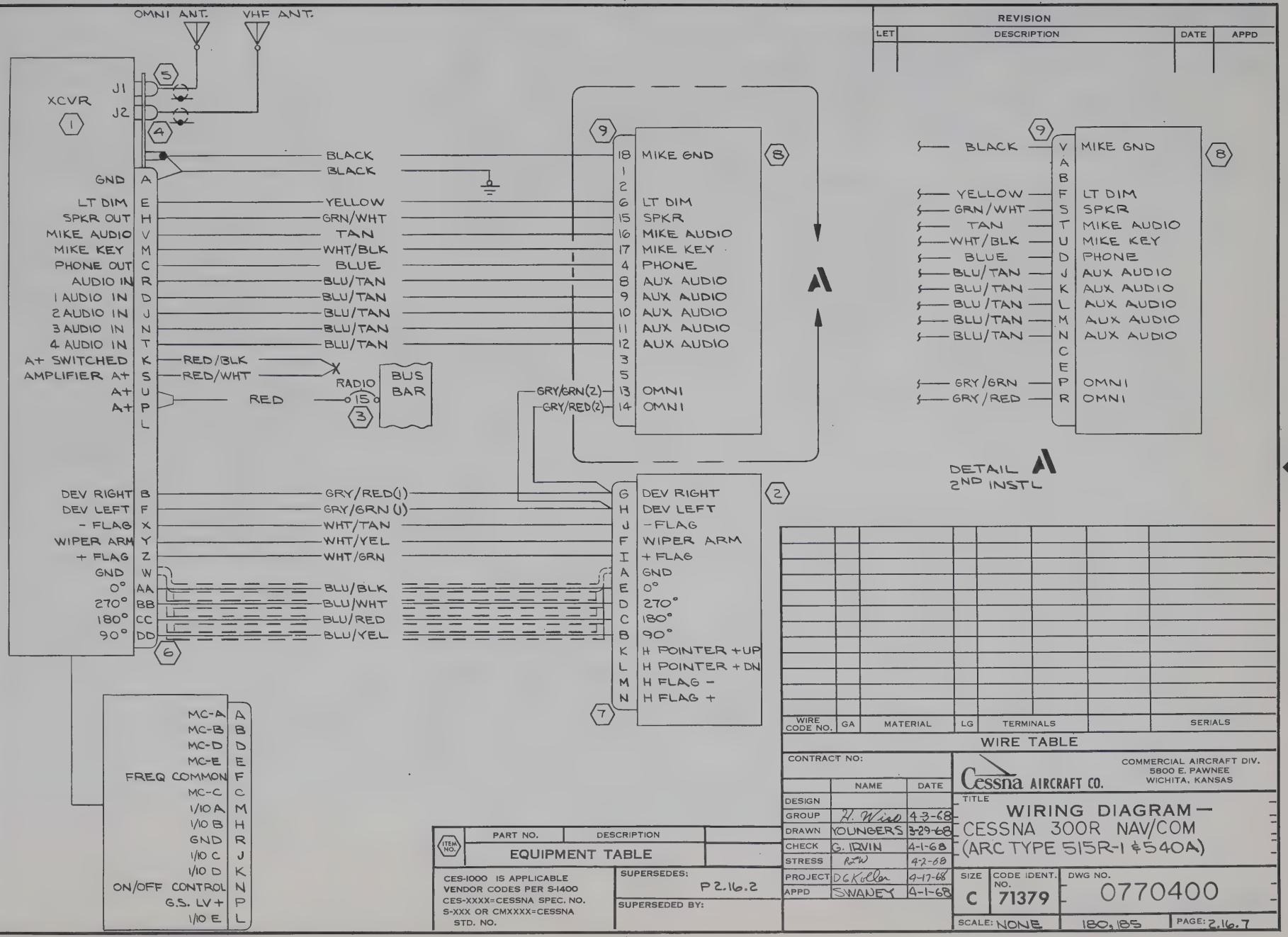

REVISION			
LET	DESCRIPTION	DATE	APPD

WIRE CODE NO.	GA	MATERIAL	LG	TERMINALS			SERIALS

WIRE TABLE

ITEM NO.	PART NO.	DESCRIPTION
		EQUIPMENT TABLE

CES-1000 IS APPLICABLE
VENDOR CODES PER S-1400
CES-XXXX=CESSNA SPEC. NO.
S-XXX OR CMXXXX=CESSNA STD. NO.

SUPERSEDES: P 2.16.2

SUPERSEDED BY:

CONTRACT NO:

	NAME	DATE
DESIGN		
GROUP	H. Wind	4-3-68
DRAWN	YOUNGERS	3-29-68
CHECK	G. IRVIN	4-1-68
STRESS	R.T.W	4-2-68
PROJECT	D.G.Kuller	4-17-68
APPD	SWANEY	4-1-68

Cessna AIRCRAFT CO.
COMMERCIAL AIRCRAFT DIV.
5800 E. PAWNEE
WICHITA, KANSAS

TITLE
WIRING DIAGRAM —
CESSNA 300R NAV/COM
(ARC TYPE 515R-1 & 540A)

SIZE	CODE IDENT. NO.	DWG NO.
C	71379	0770400

SCALE: NONE | 180, 185 | PAGE: 2.16.7

FORM NO. 80-215A

ED&RR 01980 SER 180-51876 & 185-1301

NOTES:

1. ITEMS 6, 7 & 9 ARE SUPPLIED AS PART OF KING INSTL KIT NO. 050-1052-00

2 SPKR FUNCTION ON KEYWAY SIDE OF SWITCH

REVISION			
LET	DESCRIPTION	DATE	APPD

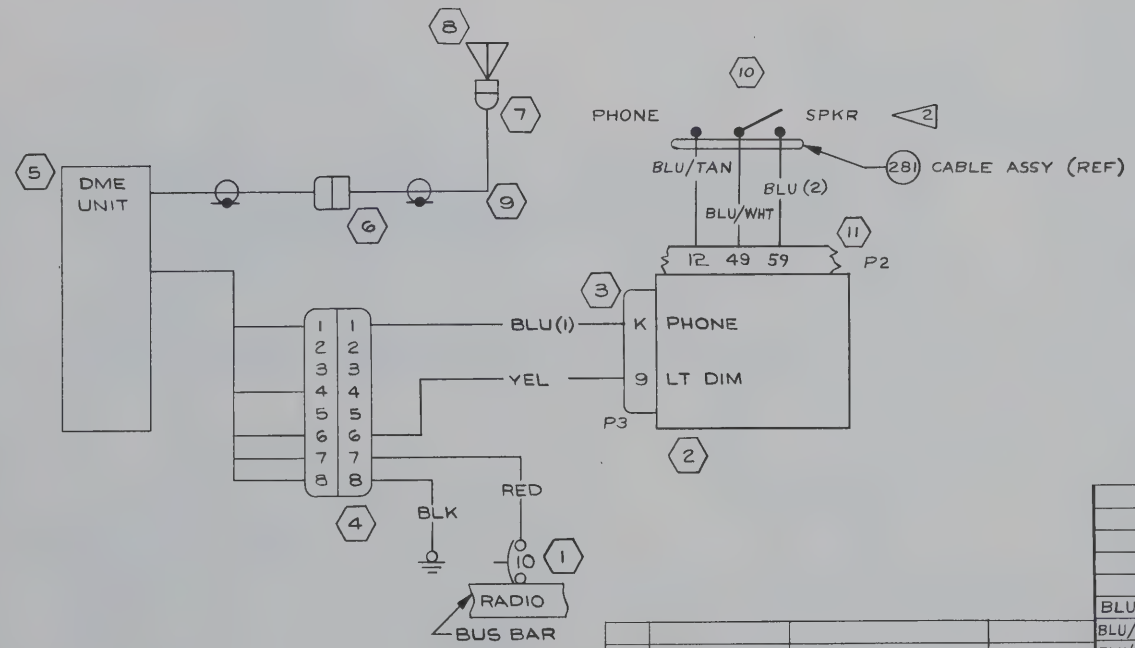

ITEM NO.	PART NO.	DESCRIPTION	PAGE
		EQUIPMENT TABLE	
11	S-1838-1	CONNECTOR	
10	S-1695-2	SWITCH	2.45.0
9	030-24-00	CONN RT ANGLE	
8	KA-32	ANTENNA	
7	21-004	CONNECTOR	
6	030-0020-01	CONNECTOR	
5	C582602-0101	DME XMTR RCVR	
4	030-2043-00	CONNECTOR	2.23.0
3	S-1838-3	CONNECTOR	2.23.0
2	0570084-1	JUNCTION BOX ASSY	7.18
1	S-1360-10	CKT BKR	

CES-1000 IS APPLICABLE
VENDOR CODES PER S-1400
CES-XXXX=CESSNA SPEC. NO.
S-XXX OR CMXXXX=CESSNA STD. NO.

SUPERSEDES: P. 2.23.1

SUPERSEDED BY:

WIRE CODE NO.	GA	MATERIAL	LG	TERMINALS		SERIALS
BLU(2)	22	-22-6		SOLDER	S-1837-1	
BLU/TAN	22	-22-6-10		SOLDER	S-1837-1	
BLU/WHT	22	-22-6-9		SOLDER	S-1837-1	
YEL	18	-18-4		S-1370-1	S-1837-1	
RED	16	-16-2		SOLDER	S-1370-2	
BLU(1)	22	-22-6		SOLDER	S-1837-1	
BLK	16	-16-0		SOLDER	S-1361-2-8	

WIRE TABLE

CONTRACT NO:

	NAME	DATE
DESIGN	SIPES VR	8/10/68
GROUP	H. Wise	9-21-68
DRAWN	RB IRWIN	9-12-68
CHECK	G. IRVIN	9-16-68
STRESS	G. GUTHRIE	9-17-68
PROJECT	[illegible]	9-23-68
APPD	SWANEY	9-1668

Cessna AIRCRAFT CO.
COMMERCIAL AIRCRAFT DIV.
5800 E. PAWNEE
WICHITA, KANSAS

TITLE
WIRING DIAGRAM — CESSNA 300 DME

SIZE	CODE IDENT. NO.	DWG NO.
C	71379	0770400

SCALE: NONE | MODEL: 180, 185 | PAGE: 2.23.2

FORM NO. 60-215A

ED 4, RR 02394 (SR5438)(SR5439) IX

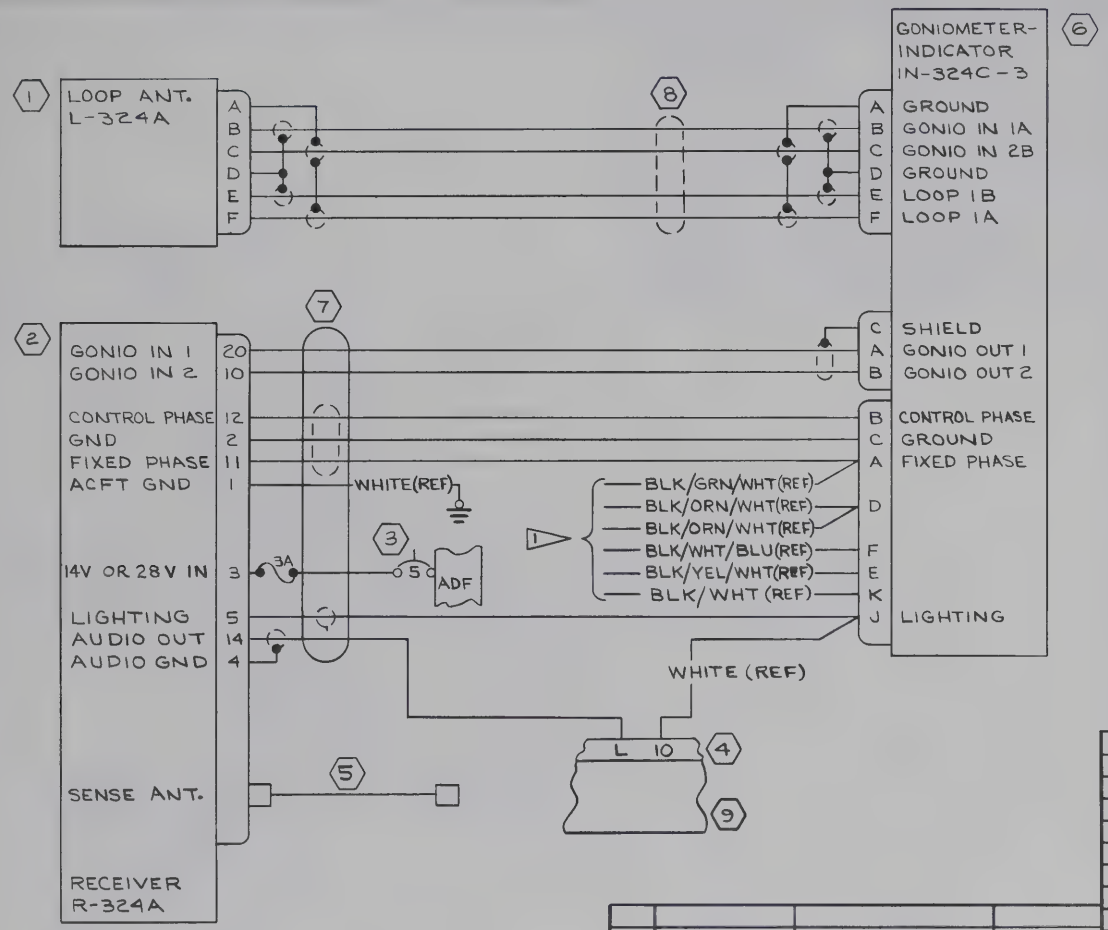

NOTES:

1. THESE WIRES TO BE CUT & CAPPED APPROX 2.00 FROM PLUG WHEN IN324 IS USED

REVISION			
LET	DESCRIPTION	DATE	APPD
A	BY REV: S-1360-5 WAS S-1360-3; ADD NOTE 1; CHG PICTURE TO SHOW 3A FUSE ED&RR 10117	RRS 9-10-68	RCA MDS GPG LE

ITEM NO.	PART NO.	DESCRIPTION	VENDOR
9	0570084-2	JUNCTION BOX ASSY	
8	33827-0000	LOOP CABLE ASSY	(00781)
7	38422-0014	CABLE ASSY	(00781)
6	38450-0003	GONIOMETER IND	(00781)
5	0770400-247	CABLE ASSY	
4	S-1838-3	HOUSING	
3	S-1360-5	CIRCUIT BKR	
2	36380-1000	RECEIVER	(00781)
1	36420-1100	LOOP ANT.	(00781)

EQUIPMENT TABLE

CES-1000 IS APPLICABLE
VENDOR CODES PER S-1400
CES-XXXX=CESSNA SPEC. NO.
S-XXX OR CMXXXX=CESSNA STD. NO.

SUPERSEDES:

SUPERSEDED BY:

WIRE CODE NO.	GA.	MATERIAL	LG	TERMINALS		SERIALS

WIRE TABLE

CONTRACT NO:

	NAME	DATE
DESIGN	W. Dickinson	6-13-68
GROUP	R. Wise	6-13-68
DRAWN	YOUNGERS	6-6-68
CHECK	G. IRVIN	6-7-68
STRESS	RKW	6-17-68
PROJECT	D. Kolcun	6-16-68
APPD	SWANEY	6-12-68

Cessna AIRCRAFT CO.
COMMERCIAL AIRCRAFT DIV.
5800 E. PAWNEE
WICHITA, KANSAS

TITLE
WIRING DIAGRAM —
CESSNA 400 ADF
(ARC TYPE 324A)

SIZE	CODE IDENT. NO.	DWG NO.
C	71379	0770400

SCALE: NONE | 180 & 185 | PAGE: 2.30.3

ED&RR 02363 (SR5438) (SR5439) IX

REVISION			
LET	DESCRIPTION	DATE	APPD
A	REFER TO PAGE 2.38.0		

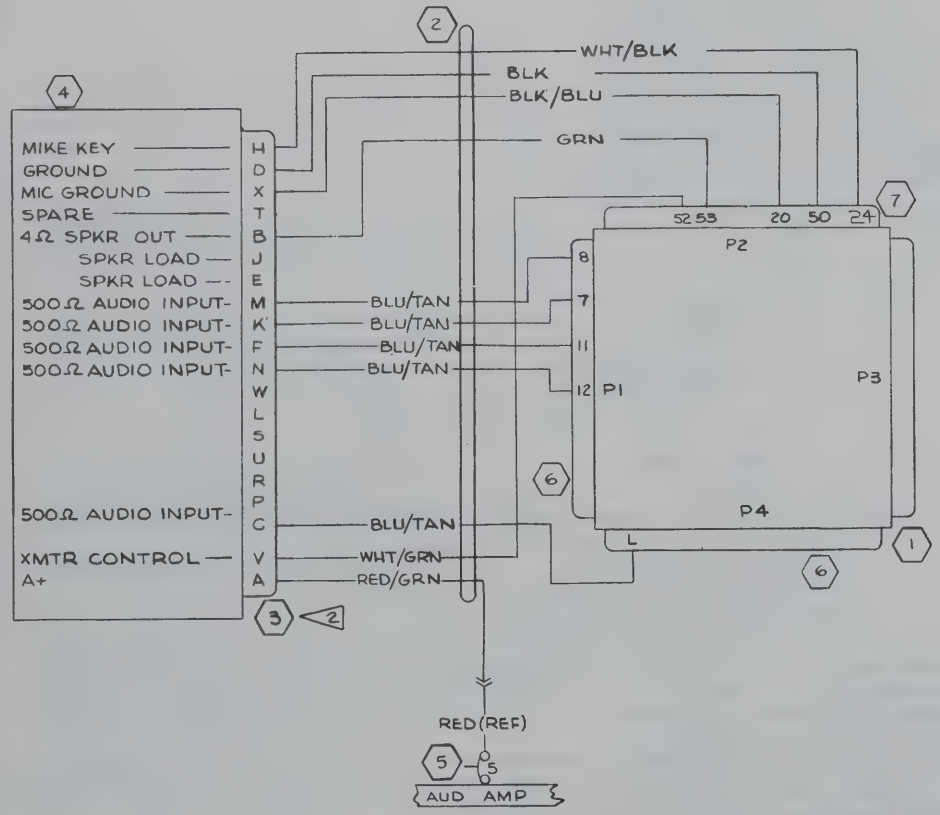

WIRE CODE NO.	GA	MATERIAL	LG	TERMINALS		SERIALS
WHT/GRN	22	-22-9-5		S-1837-1	SOLDER	
WHT/BLK	22	-22-9-0		S-1837-1	SOLDER	
RED/GRN	20	-20-2-5		S-341-2	SOLDER	
GRN	20	-20-5		S-1837-1	SOLDER	
BLU/TAN	22	-22-6-10				
BLU/TAN	22	-22-6-10				
BLU/TAN	22	-22-6-10				
BLU/TAN	22	-22-6-10				
BLU/TAN	22	-22-6-10		S-1837-1	SOLDER	
BLK/BLU	22	-22-0-6		S-1837-1	SOLDER	
BLK	18	-18-0		S-1837-1	SOLDER	

WIRE TABLE

ITEM NO.	PART NO.	DESCRIPTION	PAGE
7	S-1838-1	CONNECTOR	
6	S-1838-2	CONNECTOR	
5	S-1360-5	CIRCUIT BREAKER	
4	KA-25C	AUDIO AMPLIFIER	
3	030-2002-00	PLUG	
2	-257	CABLE ASSY	2.38.0
1	0570084-1	JUNCTION BOX ASSY	7.18

EQUIPMENT TABLE

NOTES:

1. CONNECTOR IS FURNISHED WITH KA-25C

CES-1000 IS APPLICABLE
VENDOR CODES PER S-1400
CES-XXXX=CESSNA SPEC. NO.
S-XXX OR CMXXXX=CESSNA STD. NO.

SUPERSEDES: P. 2.38.1

SUPERSEDED BY:

CONTRACT NO:

	NAME	DATE
DESIGN	V R SIPES	9/10/68
GROUP	H. Wiel	9-27-68
DRAWN	R B IRWIN	9-13-68
CHECK	G. IRVIN	9-16-68
STRESS	J. GUTHRIE	9-17-68
PROJECT	D. Parker	10-1-68
APPD	SWANEY	9-16-68

Cessna AIRCRAFT CO.
COMMERCIAL AIRCRAFT DIV.
5800 E. PAWNEE
WICHITA, KANSAS

TITLE
WIRING DIAGRAM —
KING KA-25C AUDIO AMPLIFIER

SIZE	CODE IDENT. NO.	DWG NO.
C	71379	0770400

SCALE: NONE | MODEL: 180, 185 | PAGE: 2.38.2

FORM NO. 80-218A

ED & RR 02394 (SR5438)(SR5439) IX

CHG LET	REVISION	BY / DATE	CHK / APPD
A	BY REV: VOA-9 WAS VOA-5 & TITLE WAS "NARCO UGR-2 GLIDESCOPE WITH NARCO MARK 12A & VOA-5 (ED&RR00944)(SR5595)	RLY 11-18-67	MDS DGK

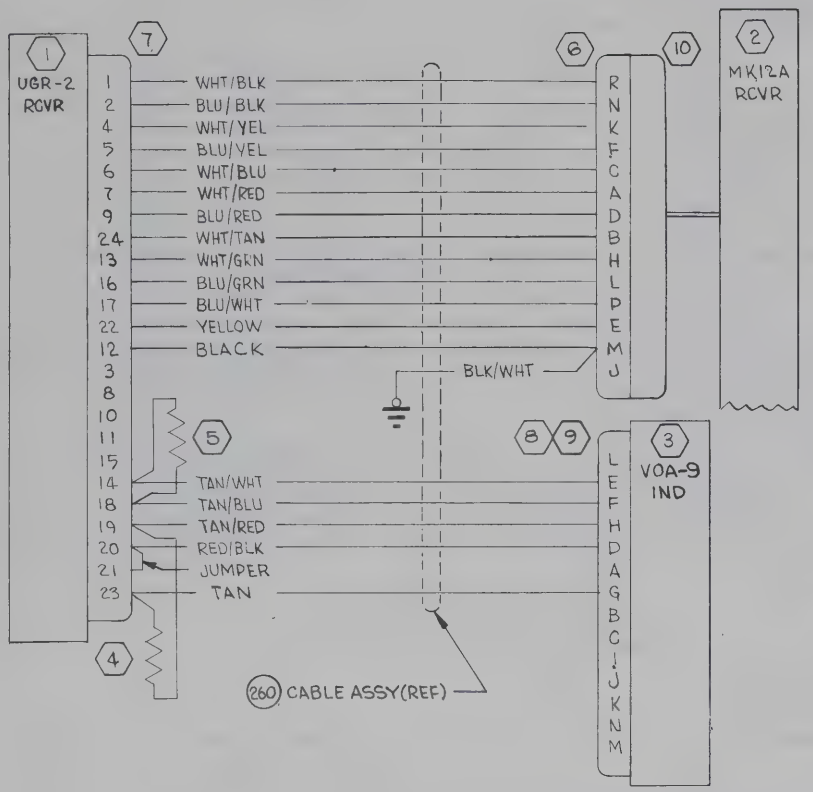

BLK/WHT	18	-18-0-9		SOLDER	S-1367-1-6		
BLACK	18	-18-0			SOLDER		
YELLOW	18	-18-4					
RED/BLK	18	-18-2-0					
TAN/RED	22	-22-10-2					
TAN/BLU	22	-22-10-6					
TAN/WHT	22	-22-10-9					
BLU/WHT	22	-22-6-9					
BLU/GRN	22	-22-6-5					
BLU/RED	22	-22-6-2					
BLU/YEL	22	-22-6-4					
BLU/BLK	22	-22-6-0					
WHT/TAN	22	-22-9-10					
WHT/GRN	22	-22-9-5					
WHT/RED	22	-22-9-2					
WHT/BLU	22	-22-9 6					
WHT/YEL	22	-22-9-4					
WHT/BLK	22	-22-9-0					
TAN		-22-10		SOLDER	SOLDER		
WIRE CODE NO.	GA	MATERIAL	LG	TERMINALS			SERIALS

WIRE TABLE

ITEM NO	PART NO.	DESCRIPTION	INSTALLED ON
10	MRA-14S	PIG TAIL(93493)	
9	41228-6	CLAMP(93493)	
8	41223-2	PLUG(93493)	
7	41291-101	CONNECTOR(93493)	
6	41247-102	CONNECTOR(93493)	
5	470Ω, 1/4 WATT	RESISTOR(93493)	
4	1000Ω, 1/4 WATT	RESISTOR(93493)	
3	VOA-9	INDICATOR(93493)	
2	MARK 12A	XCVR(93493)	
1	UGR-2	RCVR(93493)	

EQUIPMENT TABLE

CESSNA AIRCRAFT CO. COMMERCIAL AIRCRAFT DIVISION, WICHITA, KANSAS

	NAME	DATE
DRAWN	W COOK	2-3-67
GROUP	H. Wise	3-14-67
CHECK	YAKSHAW	4-1-67
PROJ	GKM Cook	4-6-67
	[illegible]	4-7-67

TITLE: WIRING DIAGRAM — NARCO UGR-2 GLIDESLOPE WITH NARCO MARK 12A & VOA-9

Cessna.

DWG NO. 0770400

SUPERSEDED BY:

SUPERSEDES: 0770400, PG 2.12.0

MODEL: 180-185

REV: A

PAGE: 2.41.1

FORM NO. 80-161

CHG LET	REVISION	BY / DATE	CHK / APPD
A	BY REV: R-543B WAS R-543A & TITLE WAS CESSNA GLIDESLOPE (ARC TYPE R-543A); 36440-0000 WAS 34340 (ED&RR 00952) (SR5632)	RLY 12-7-67	MDS

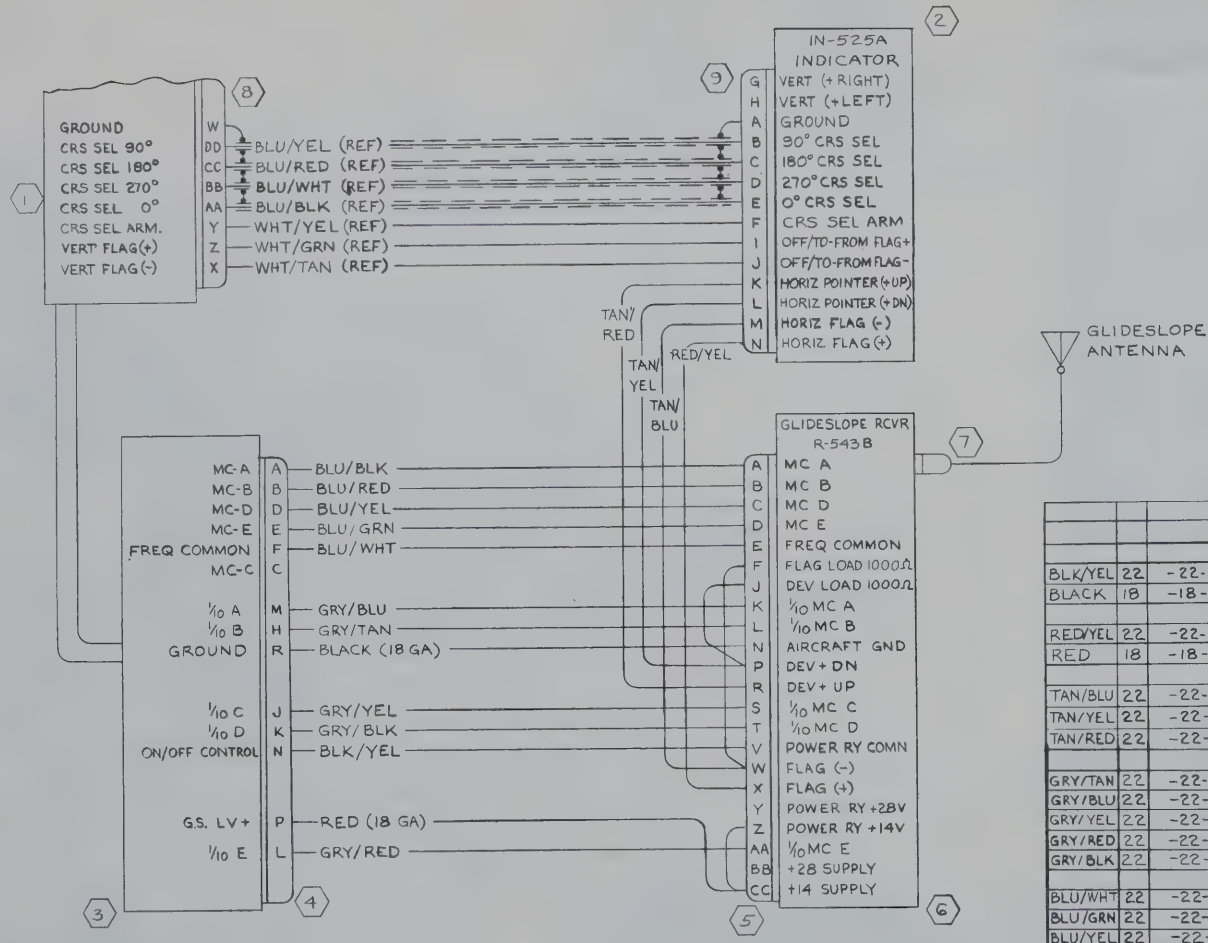

WIRE CODE NO.	GA	MATERIAL	LG	TERMINALS			SERIALS
BLK/YEL	22	-22-0-4		SOLDER	SOLDER		
BLACK	18	-18-0					
RED/YEL	22	-22-2-4					
RED	18	-18-2					
TAN/BLU	22	-22-10-6					
TAN/YEL	22	-22-10-4					
TAN/RED	22	-22-10-2					
GRY/TAN	22	-22-8-10					
GRY/BLU	22	-22-8-6					
GRY/YEL	22	-22-8-4					
GRY/RED	22	-22-8-2					
GRY/BLK	22	-22-8-0					
BLU/WHT	22	-22-6-9					
BLU/GRN	22	-22-6-5					
BLU/YEL	22	-22-6-4					
BLU/RED	22	-22-6-2					
BLU/BLK	22	-22-6-0		SOLDER	SOLDER		

WIRE TABLE

ITEM NO	PART NO.	DESCRIPTION	INSTALLED ON
9	27826	CONNECTOR	
8	29747-0026	CONNECTOR	
7	11337	CONNECTOR	
6	36440-0000	GLIDESLOPE RCVR	(ARC TYPE R-543B)
5	36194	CONNECTOR KIT	
4	36195	CONNECTOR KIT	
3	36300	CABLE HARNESS KIT	
2	32350	INDICATOR (ARC TYPE IN-525A)	
1	36150-0414	RCVR/XMTR (ARC TYPE RT515R 1)	

EQUIPMENT TABLE

CESSNA AIRCRAFT CO., COMMERCIAL AIRCRAFT DIVISION, WICHITA, KANSAS

	NAME	DATE
DRAWN	G WOOD	1-30-67
GROUP	H. Wiele	2-6-67
CHECK	YAKSHAW	2-10-67
PROJ	[illegible]	1-14-67

TITLE: WIRING DIAGRAM— CESSNA 400 GLIDESLOPE (ARC TYPE R-543B)

Cessna.

DWG NO: 0770400

SUPERSEDED BY: | SUPERSEDES: | MODEL: 180-185 | REV: A | PAGE: 2.42.1

FORM NO 80-161A

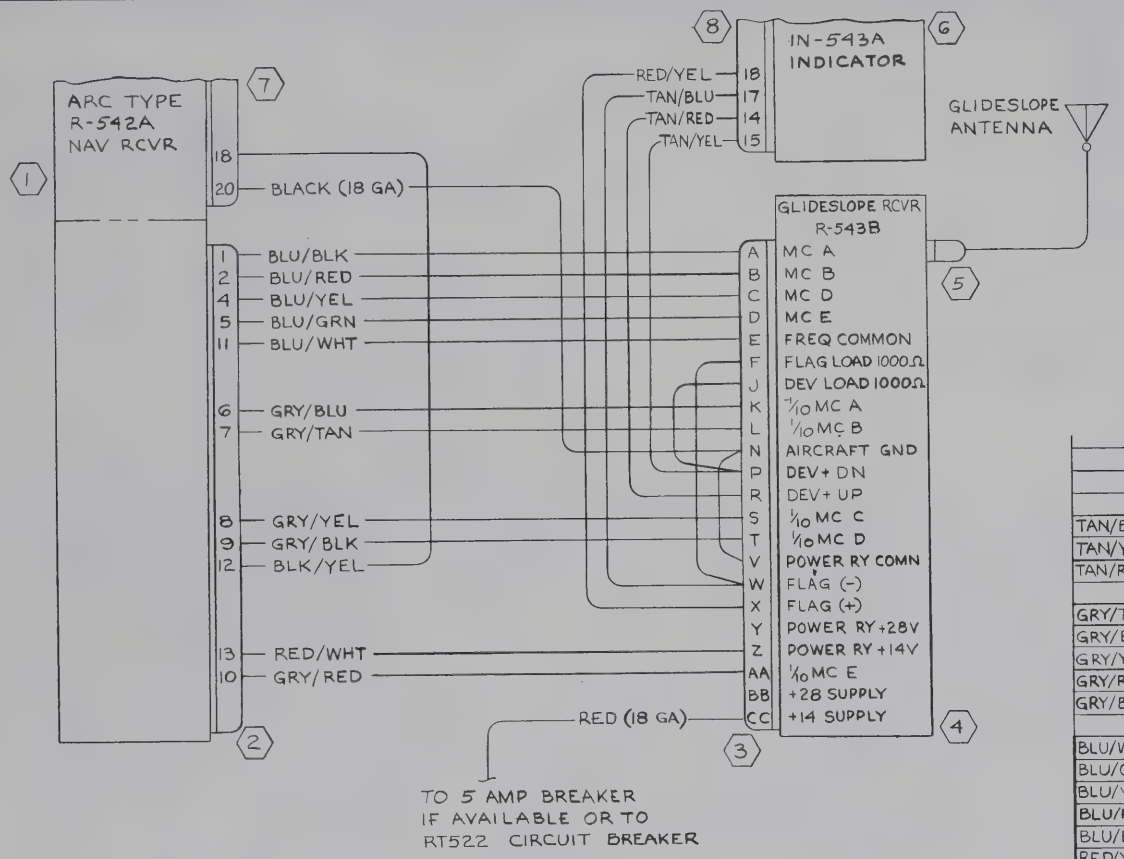

REVISIONS			
LTR	DESCRIPTION	DATE	APPROVED
A	BY REV: R-543B WAS R-543A & TITLE WAS CESSNA GLIDESLOPE (ARC TYPE R-543A); 36440-0000 WAS 34340 (ED&RR 00952) (SR5632)	RLY 12-7-67	MDS ALA HRW DGK

WIRE CODE NO.	GA	MATERIAL	LG	TERMINALS			SERIALS
TAN/BLU	22	-22-10-6		SOLDER	SOLDER		
TAN/YEL	22	-22-10-4		SOLDER	SOLDER		
TAN/RED	22	-22-10-2		SOLDER	SOLDER		
GRY/TAN	22	-22-8-10		SOLDER	SOLDER		
GRY/BLU	22	-22-8-6					
GRY/YEL	22	-22-8-4					
GRY/RED	22	-22-8-2					
GRY/BLK	22	-22-8-0		SOLDER	SOLDER		
BLU/WHT	22	-22-6-9		SOLDER	SOLDER		
BLU/GRN	22	-22-6-5					
BLU/YEL	22	-22-6-4					
BLU/RED	22	-22-6-2					
BLU/BLK	22	-22-6-0					
RED/YEL	22	-22-2-4					
RED/WHT		-22-2-9		SOLDER			
RED	18	-18-2		S-1367-1-8	SOLDER		
BLK/YEL	22	-22-0-4		SOLDER	SOLDER		
BLACK	18	-18-0		SOLDER	SOLDER		

WIRE TABLE

ITEM NO.	PART NO.	DESCRIPTION
8	34294-0425	CONNECTOR
7	35693-0004	CONNECTOR
6	34290	INDICATOR (ARC IN-543)
5	11337	CONNECTOR
4	36440-0000	G/S RCVR (ARC TYPE R-543B)
3	36194	CONNECTOR KIT (ARC)
2	35548-0225	CONNECTOR (ARC)
1	33560	NAV RCVR (ARC R-542)

EQUIPMENT TABLE

CONTRACT NO:

	NAME	DATE
DESIGN	G WOOD	1-9-67
GROUP	H. Wise	2-6-67
DRAWN	G WOOD	2-6-67
CHECK	YAKSHAW	2-10-67
STRESS	DKM Fouk	2-13-67
PROJECT	[illegible]	2-14-67
APPD		

Cessna AIRCRAFT CO.
COMMERCIAL AIRCRAFT DIV.
5800 E. PAWNEE
WICHITA, KANSAS

TITLE
WIRING DIAGRAM — CESSNA 400 GLIDESLOPE (ARC TYPE R-543B)

SIZE	CODE IDENT. NO.	DWG NO.
C	71379	0770400

SCALE: NONE

PAGE: 2.43.1

FORM NO. 80-215

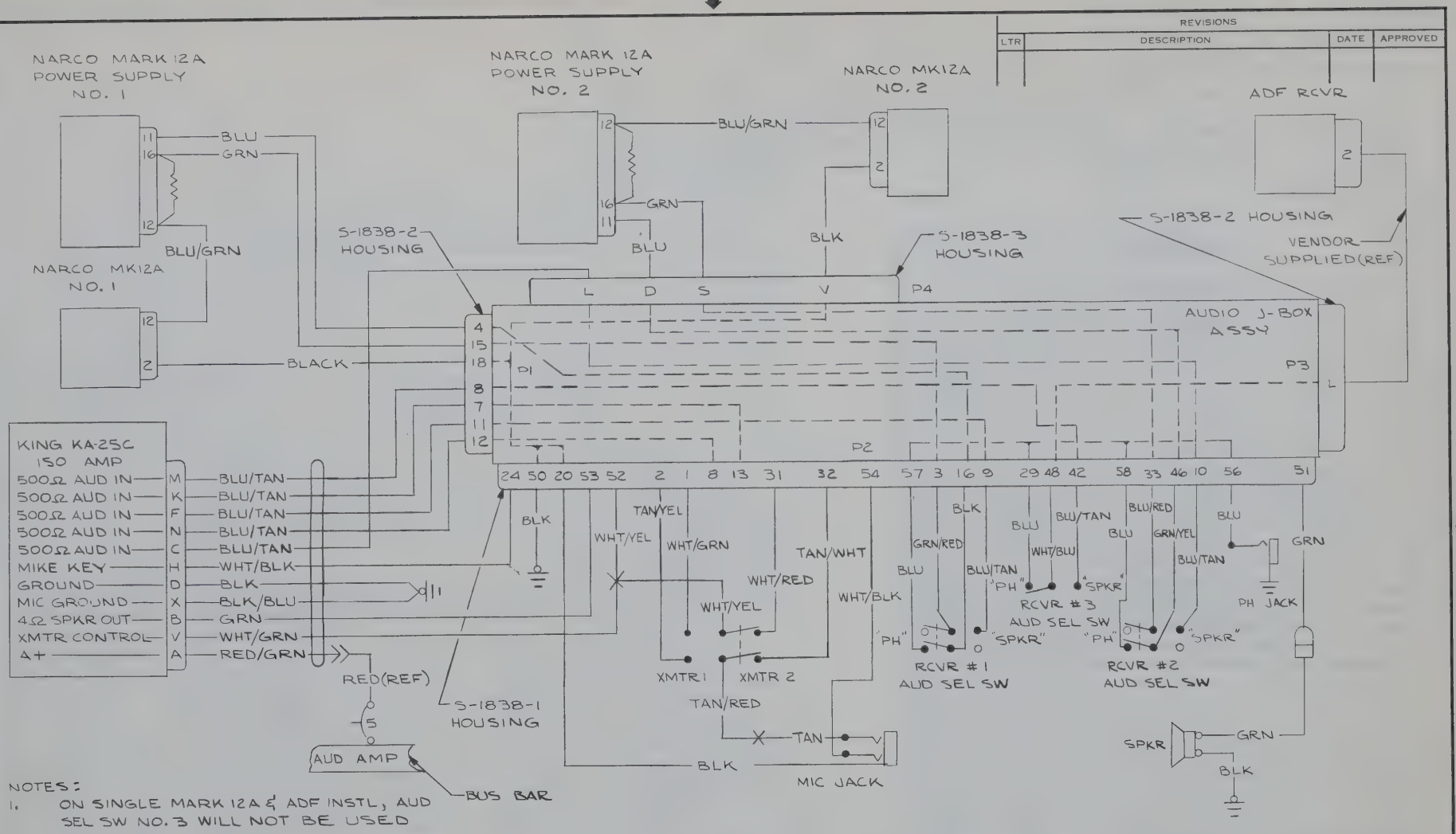

NOTES:

1. ON SINGLE MARK 12A & ADF INSTL, AUD SEL SW NO. 3 WILL NOT BE USED
2. THIS PAGE IS A REFERENCE PRINT ONLY
3. REFER TO 0770400 PAGE 2.38.2 FOR KING KA-25C ISOLATION AMPLIFIER WIRING DIAGRAM

REVISIONS

LTR	DESCRIPTION	DATE	APPROVED

CONTRACT NO:	NAME	DATE
DESIGN	HENSHAW	12-3-68
GROUP	H. Wiles	12-5-68
DRAWN	HENSHAW	12-3-68
CHECK	HARRIS	12-3-68
STRESS		
PROJECT	R. Parkerson	12-9-68
APPD		

SUPERSEDES: P. 2.44.3

Cessna AIRCRAFT CO.
COMMERCIAL AIRCRAFT DIV.
5800 E. PAWNEE
WICHITA, KANSAS

TITLE: WIRING DIAGRAM — TYPICAL SWITCHING, NARCO MARK 12A & ADF

SIZE	CODE IDENT. NO.	DWG NO.
C	71379	0770400

SCALE: NONE | 180&185 | PAGE: 2.44.3.1

SER 18051994 & 18501447

FORM NO. 80-214

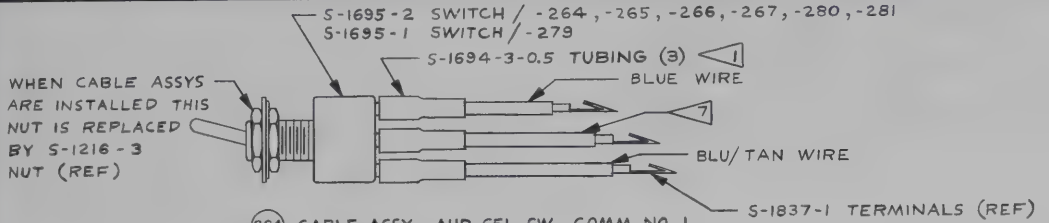

(264) CABLE ASSY - AUD SEL SW, COMM NO. 1
(265) CABLE ASSY - AUD SEL SW, NAV NO. 1
(266) CABLE ASSY - AUD SEL SW, COMM NO. 2
(267) CABLE ASSY - AUD SEL SW, NAV NO. 2
(279) CABLE ASSY - AUD SEL SW, MKR BCN
(280) CABLE ASSY - AUD SEL SW, ADF
(281) CABLE ASSY - AUD SEL SW, DME

REVISION			
LET	DESCRIPTION	DATE	APPD
B	BY REV: REVISED & REDRAWN; ADD -279, -280, -281, S-1695-1, S-1837-1 (REF), NOTE 7 & NEW WIRING PAGE NUMBERS IN L/M; DELETE TERMINAL BOARD NUMBERS, NOTES 2 & 3; S-1696-1 WAS S-392-3 ED & RR 02394 (SR5438)(SR5439) IX	RBI 9-13-68	CAT MDS (JAY) HPW ✓ 50

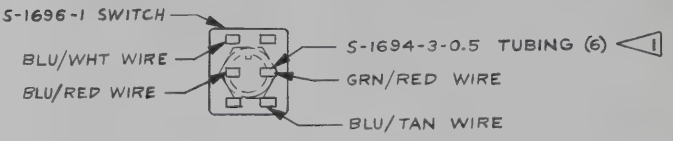

(269) CABLE ASSY - AUD SELECTOR SWITCH NO. 1 6
(270) CABLE ASSY - AUD SELECTOR SWITCH NO. 2 6

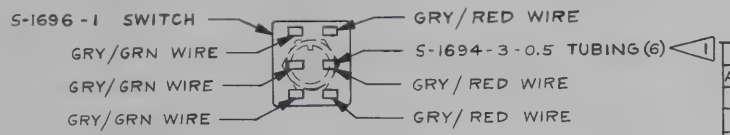

(271) CABLE ASSY - OMNI SELECTOR SWITCH (REAR VIEW)

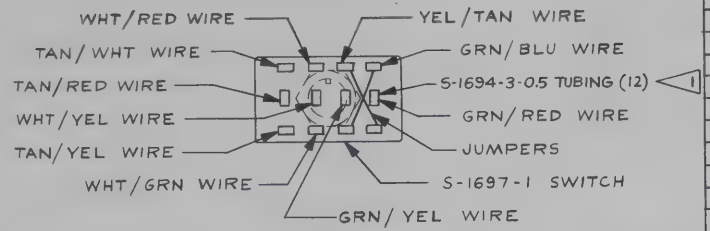

(268) CABLE ASSY - TRANSMITTER SELECTOR SWITCH (REAR VIEW)

281	280	279	271	270	269	268	267	266	265	264	EFFECTIVE SERIALS	PAGE	PART NUMBER	DESCRIPTION
		1										2.23.2	S-1695-1	SWITCH
A/R												2.11.1		WIRING
	A/R											2.14.2		WIRING
		A/R										2.45.7		WIRING
			A/R									2.45.8		WIRING
				A/R	A/R	A/R	A/R	A/R	A/R	A/R		2.45.6		WIRING
3	3	3	6	6	6	12	3	3	3	3			S-1694-3-0.5	SHRINKABLE TUBING
						1							S-1697-1	SWITCH
			1	1	1								S-1696-1	SWITCH
1	1						1	1	1	1			S-1695-2	SWITCH
													-281	ASSY-AUD SEL SW, DME
													-280	ASSY-AUD SEL SW, ADF
													-279	ASSY-AUD SEL SW, MKR BCN
													-271	ASSY-OMNI SEL SW
												6	-270	ASSY-AUD SEL SW NO. 2
												6	-269	ASSY-AUD SEL SW NO. 1
													-268	ASSY-XMTR SEL SW
													-267	ASSY-AUD SEL SW, NAV #2
													-266	ASSY-AUD SEL SW, COMM #2
													-265	ASSY-AUD SEL SW, NAV #1
													-264	ASSY-AUD SEL SW, COMM #1
NO. REQD/NEXT ASSY														

LIST OF MATERIAL

NOTES:

1. SHRINKABLE TUBING INSTALLED ON ALL SWITCHES AS SHOWN ON AUDIO SELECTOR SWITCHES
2. NUMBERS IN PARENTHESES ARE TERMINAL BOARD NUMBERS (0770714-1). NUMBERS TO BE STAMPED ON WIRES PER CES-1015
3. WIRE NUMBERS APPLY AS FOLLOWS: -264, (6)(11); -265, (7)(12); -266, (8)(13); -267, (9)(14); -269, (16)(17)(40); -270, (17)(12)(41)
4. SWITCHES SHOWN WITH KEYWAY AT TOP
5. ALL WIRES ARE REFERENCED. REFER TO APPLICABLE WIRING DIAGRAM FOR FABRICATION OF WIRES
6. USED ONLY WITH DUAL NARCO MARK 12A INSTL
7. REFER TO WIRING DIAGRAM FOR WIRE COLOR

DO NOT SCALE PRINT
BREAK ALL SHARP EDGES
A/R = AS REQD
CES-XXXX=CESSNA SPEC. NO.
S-XXX OR CMXXXX=CESSNA STD. NO.
$=APPROX EQUAL SPACES
CES-1000 IS APPLICABLE VENDOR CODES PER S-1400

UNLESS OTHERWISE SPECIFIED
DIMENSIONS ARE IN INCHES
TOLERANCES ARE
DECIMALS: .00 ±.03, .000 ±.010 | ANGLES: MACH ±0 30', FORMED ±2°
FOR HOLES, CSINKS, ETC., SEE CES 1012
FOR BASIC CODES SEE NAS 523

BJ-MS20470AD	BB-MS20426AD

SUPERSEDES: P. 2.45.0 REV "A"
SUPERSEDED BY:

CONTRACT NO:

	NAME	DATE
DESIGN	VR SIPES	8/10/68
GROUP	H. WISE	7-27-67
DRAWN	C. GARCIA	8-17-67
CHECK	YAKSHAW	8-19-67
STRESS	A.U.B	
PROJECT	J.S.M	
APPD		

Cessna AIRCRAFT CO.
COMMERCIAL AIRCRAFT DIV.
5800 E. PAWNEE
WICHITA, KANSAS

TITLE: CABLE ASSEMBLY - AUDIO, OMNI & XMTR SELECTOR SWITCHES

SIZE	CODE IDENT. NO.	
C	71379	0770400

SCALE: 2:1 | MODEL: 180, 185 | PAGE: 2.45.0

FORM NO. 80-221

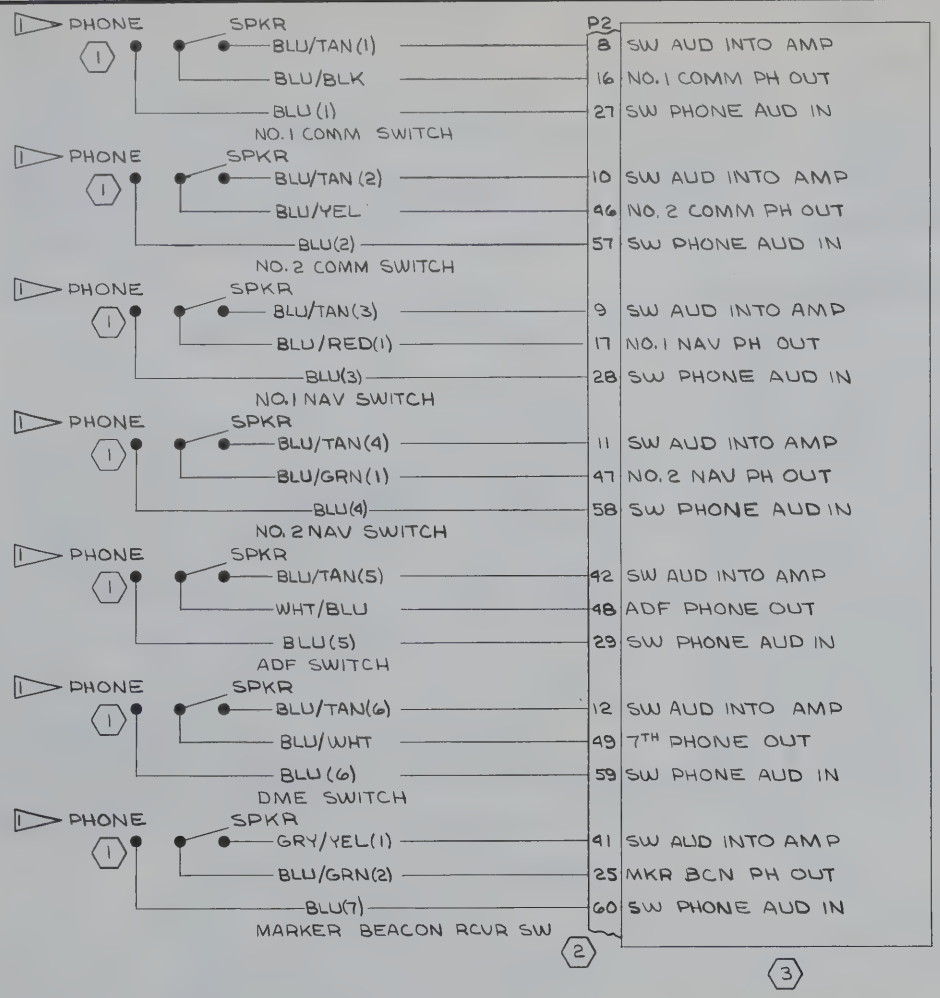

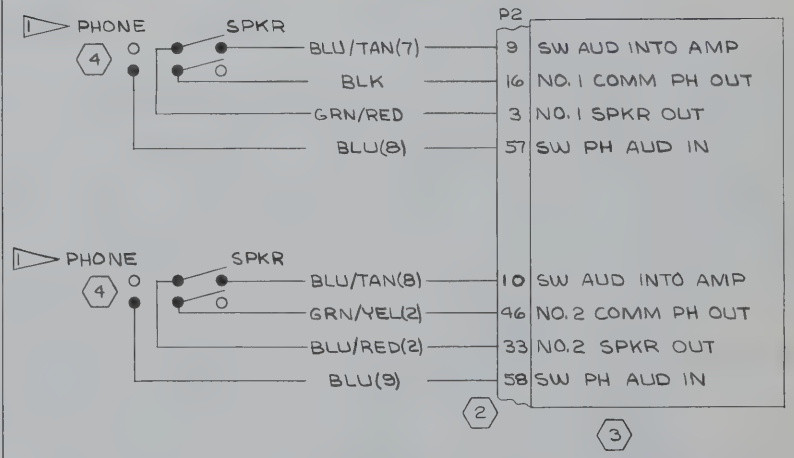

REVISION			
LET	DESCRIPTION	DATE	APPD

WIRE CODE NO.	GA	MATERIAL	LG	TERMINALS		SERIALS

WIRE TABLE

ITEM NO.	PART NO.	DESCRIPTION
		EQUIPMENT TABLE

CES-1000 IS APPLICABLE VENDOR CODES PER S-1400
CES-XXXX=CESSNA SPEC. NO.
S-XXX OR CMXXXX=CESSNA STD. NO.

SUPERSEDES:

SUPERSEDED BY:

CONTRACT NO:

	NAME	DATE
DESIGN	V.R. SIPES	10/2/68
GROUP	H. Wind	9-27-68
DRAWN	L. SCRAPER	9-13-68
CHECK	G. IRVIN	9-16-68
STRESS	G.GUTHRIE	9-19-68
PROJECT	[illegible]	10-1-68
APPD	SWANEY	9-16-68

Cessna AIRCRAFT CO.
COMMERCIAL AIRCRAFT DIV.
5800 E. PAWNEE
WICHITA, KANSAS

TITLE
WIRING DIAGRAM — AUDIO SELECTOR SWITCHES

SIZE	CODE IDENT. NO.	DWG NO.
C	71379	0770400

SCALE: NONE | 180, 185 | PAGE: 2.45.6.1

FORM NO. 80-218A

ED# RR 02394 (SR5438)(SR5439) II

NOTES:

1. OMNI 2 FUNCTION TO BE ON KEYWAY SIDE OF SWITCH

REVISION			
LET	DESCRIPTION	DATE	APPD

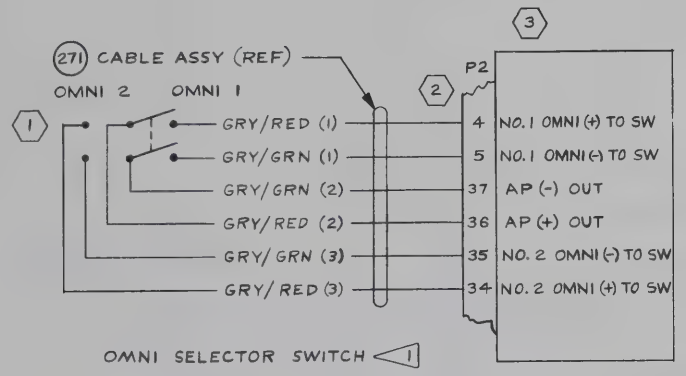

WIRE CODE NO.	GA	MATERIAL	LG	TERMINALS			SERIALS
GRY/RED(3)	22	-22-8-2		SOLDER	S-1837-1		
GRY/RED(2)	22	-22-8-2					
GRY/RED(1)	22	-22-8-2					
GRY/GRN(3)	22	-22-8-5					
GRY/GRN(2)	22	-22-8-5					
GRY/GRN(1)	22	-22-8-5		SOLDER	S-1837-1		

WIRE TABLE

ITEM NO.	PART NO.	DESCRIPTION	PAGE
3	0570084-1	JUNCTION BOX ASSY	7.18
2	S-1838-1	CONNECTOR	
1	S-1696-1	SWITCH	2.45.0

EQUIPMENT TABLE

CES-1000 IS APPLICABLE
VENDOR CODES PER S-1400
CES-XXXX=CESSNA SPEC. NO.
S-XXX OR CMXXXX=CESSNA STD. NO.

SUPERSEDES: P. 2.45.2

SUPERSEDED BY:

CONTRACT NO:

	NAME	DATE
DESIGN	VR SIPES	8/10/68
GROUP	H. Wise	9-21-68
DRAWN	RB IRWIN	9-14-68
CHECK	G. IRVIN	9-16-68
STRESS	G. GUTHRIE	9-17-68
PROJECT	[illegible]	9-24-68
APPD	SWANEY	9-16-68

Cessna AIRCRAFT CO.
COMMERCIAL AIRCRAFT DIV.
5800 E. PAWNEE
WICHITA, KANSAS

TITLE
WIRING DIAGRAM — OMNI AUDIO XMTR SWITCH

SIZE	CODE IDENT. NO.	DWG NO.
C	71379	0770400

SCALE: NONE | MODEL: 180, 185 | PAGE: 2.45.7

FORM NO. 80-215A

FD & RR 02394 (SR5438) (SR5439) TX

NOTES:

1. TRANSMITTER NO. 1 IS ON KEYWAY SIDE OF SWITCH
2. NO. 26 CONNECTS DIRECTLY TO 10Ω RESISTOR ON PRINTED CIRCUIT BOARD
3. NO. 53 CONNECTS TO RELAY WIPER CONTACTS THEN TO ACFT SPKR THROUGH NO. 51. WHEN RELAY IS ACTUATED, NO. 53 CONNECTS TO 10Ω RESISTOR ON PRINTED CIRCUIT BOARD

REVISION			
LET	DESCRIPTION	DATE	APPD

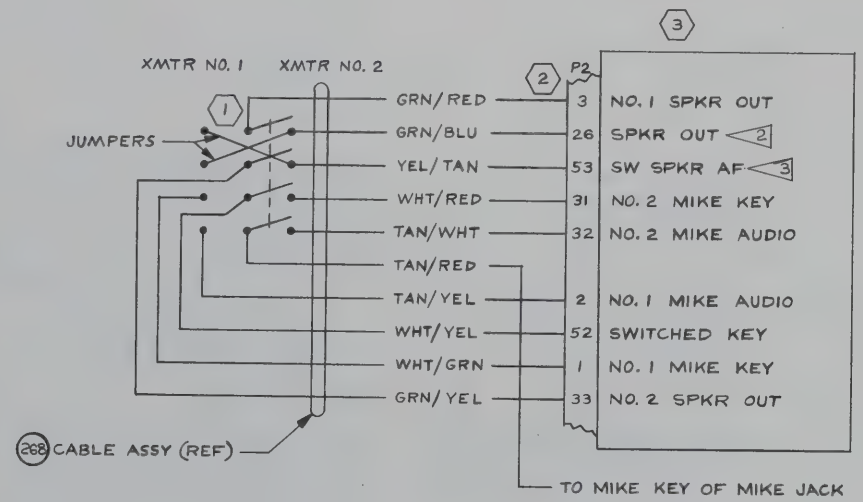

WIRE CODE NO.	GA	MATERIAL	LG	TERMINALS			SERIALS
YEL/TAN	20	20-4-10		SOLDER	S-1837-1		
WHT/YEL	22	22-9-4					
WHT/RED	22	22-9-2					
WHT/GRN	22	22-9-5					
TAN/YEL	22	22-10-4					
TAN/WHT	22	22-10-9					
TAN/RED	22	22-10-2					
GRN/YEL	20	20-5-4					
GRN/RED	20	20-5-2					
GRN/BLU	20	20-5-6		SOLDER	S-1837-1		

WIRE TABLE

ITEM NO.	PART NO.	DESCRIPTION	PAGE
3	0570084-1	JUNCTION BOX	7.18
2	S-1838-1	CONNECTOR	
1	S-1697-1	SWITCH	2.45.0

EQUIPMENT TABLE

CES-1000 IS APPLICABLE VENDOR CODES PER S-1400
CES-XXXX=CESSNA SPEC. NO.
S-XXX OR CMXXXX=CESSNA STD. NO.

SUPERSEDES: P. 2.45.3

SUPERSEDED BY:

CONTRACT NO:

	NAME	DATE
DESIGN	SIPESVR	9/14/68
GROUP	H. Wiel	9-21-68
DRAWN	RB IRWIN	9-14-68
CHECK	G. IRVIN	9-16-68
STRESS	G GUTHRIE	9-20-68
PROJECT		10-1-68
APPD	SWANEY	9-16-68

Cessna AIRCRAFT CO.
COMMERCIAL AIRCRAFT DIV.
5800 E. PAWNEE
WICHITA, KANSAS

TITLE
WIRING DIAGRAM — TRANSMITTER SELECTOR SWITCH

SIZE	CODE IDENT. NO.	DWG NO.
C	71379	0770400

SCALE: NONE | MODEL: 180, 185 | PAGE: 2.45.8

FORM NO. 80-215A

ED 4 RR 02394 (SR5438)(SR5439) IX

REVISION			
LET	DESCRIPTION	DATE	APPD

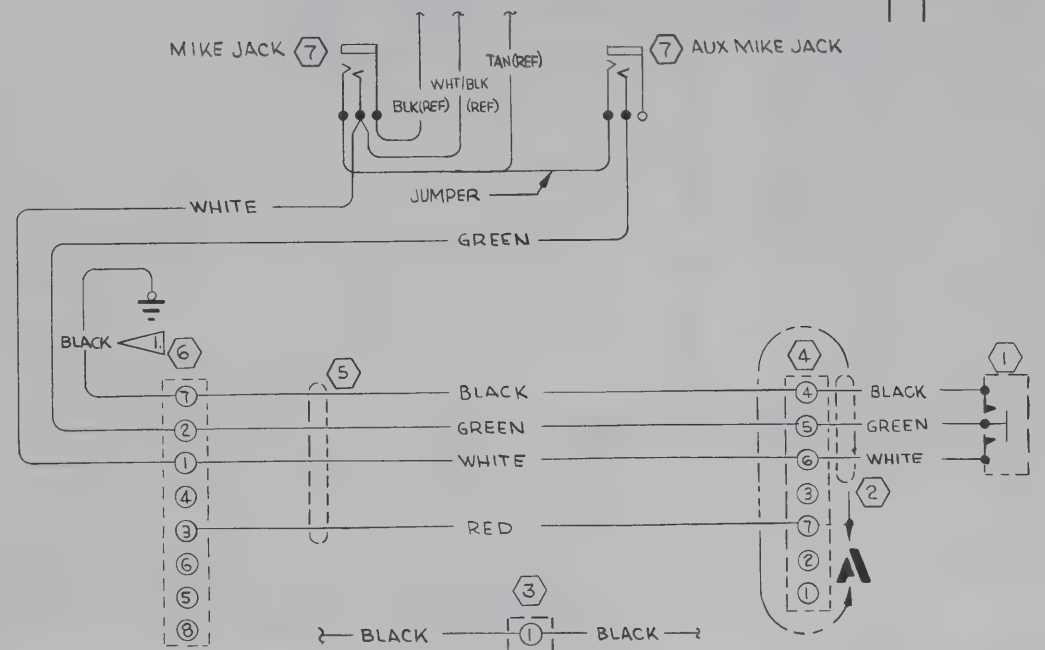

NOTES:
1. THIS WIRE NOT REQUIRED WHEN CONTROL WHEEL MAP LIGHT IS INSTALLED. MAP LIGHT WIRING INCLUDES 0700092, WIRE LA-21 TO COMPLETE THIS CIRCUIT.
2. THESE WIRES PART OF 8409 CABLE.
3. THESE WIRES PART OF 8443 CABLE.
4. PART NO. IS 329636, VENDOR CODE IS 00779
5. PART NO. IS 320733, VENDOR CODE IS 00779

WIRE CODE NO.	GA	MATERIAL	LG	TERMINALS		SERIALS
3 BLACK				5	5	
GREEN						
3 WHITE						
2 BLACK						
GREEN						
WHITE						
2 RED				5	5	
1 BLACK	20			S-1367-1-8	4	
GREEN	20			SOLDER	4	
WHITE	20			SOLDER	4	

WIRE TABLE

ITEM NO.	PART NO.	DESCRIPTION	
7	S-1102-1	MIKE JACK	
6	8-171	TERMINAL BLOCK	(71785)
5	8409	CABLE	(70903)
4	1570142-2	MAP LITE ASSY	
3	5-171	TERMINAL BLOCK	(71785)
2	8443	CABLE	(70903)
1	A8002	MIKE KEY SWITCH	(HETH)

EQUIPMENT TABLE

CES-1000 IS APPLICABLE
VENDOR CODES PER S-1400
CES-XXXX=CESSNA SPEC. NO.
S-XXX OR CMXXXX=CESSNA STD. NO.

SUPERSEDES:

SUPERSEDED BY:

CONTRACT NO:

	NAME	DATE
DESIGN	W COOK	
GROUP	N. Wise	8-22-67
DRAWN	COOK	8-21-67
CHECK	LAURIE	8-30-67
STRESS	[illegible]	8-31-67
PROJECT	[illegible]	8-24-67
APPD	R.C. Moore	8-29-67

Cessna AIRCRAFT CO.
COMMERCIAL AIRCRAFT DIV.
5800 E. PAWNEE
WICHITA, KANSAS

TITLE
WIRING DIAGRAM —
CONTROL WHEEL MIKE SWITCH

SIZE	CODE IDENT. NO.	DWG NO.
C	71379	0770400

SCALE: NONE | 180-185 | PAGE: 2.46

FORM NO. 80-215A

SER 18051876 & ON SER 185-1301 & ON

REVISION			
LET	DESCRIPTION	DATE	APPD

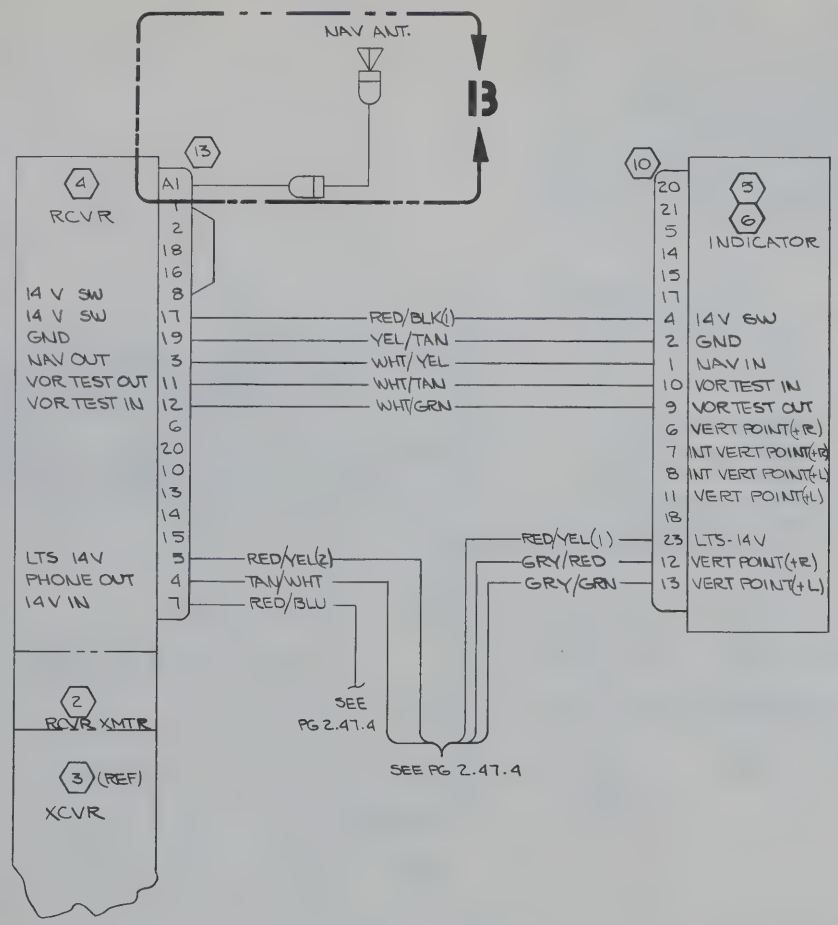

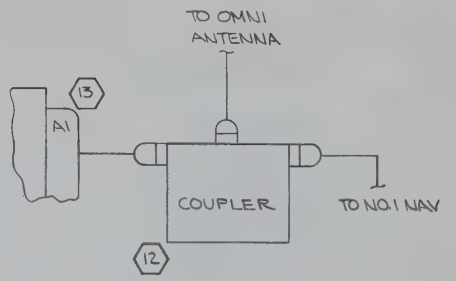

DETAIL 13
2ND INSTL

WIRE CODE NO.	GA	MATERIAL	LG	TERMINALS		SERIALS

WIRE TABLE

ITEM NO.	PART NO.	DESCRIPTION

EQUIPMENT TABLE

CES-1000 IS APPLICABLE
VENDOR CODES PER S-1400
CES-XXXX=CESSNA SPEC. NO.
S-XXX OR CMXXXX=CESSNA STD. NO.

SUPERSEDES:

SUPERSEDED BY:

CONTRACT NO:

	NAME	DATE
DESIGN	Computer	12-5-68
GROUP	H. Wise	12-5-68
DRAWN	F. RUNNER	11-28-68
CHECK	HARRIS	12-2-68
STRESS	GUTHRIE	12-4-68
PROJECT		
APPD	SWANEY	12-3-68

Cessna AIRCRAFT CO.
COMMERCIAL AIRCRAFT DIV.
5800 E. PAWNEE
WICHITA, KANSAS

TITLE
WIRING DIAGRAM — CESSNA 400 NAV/COMM (ARC TYPE RT-522 & RT-532A)

SIZE	CODE IDENT. NO.	DWG NO.
C	71379	0770400

SCALE: NONE | 180 & 185 | PAGE: 2.47.3

FORM NO. 80-218A

SER 18051876 & ON
SER 185-1301 & ON

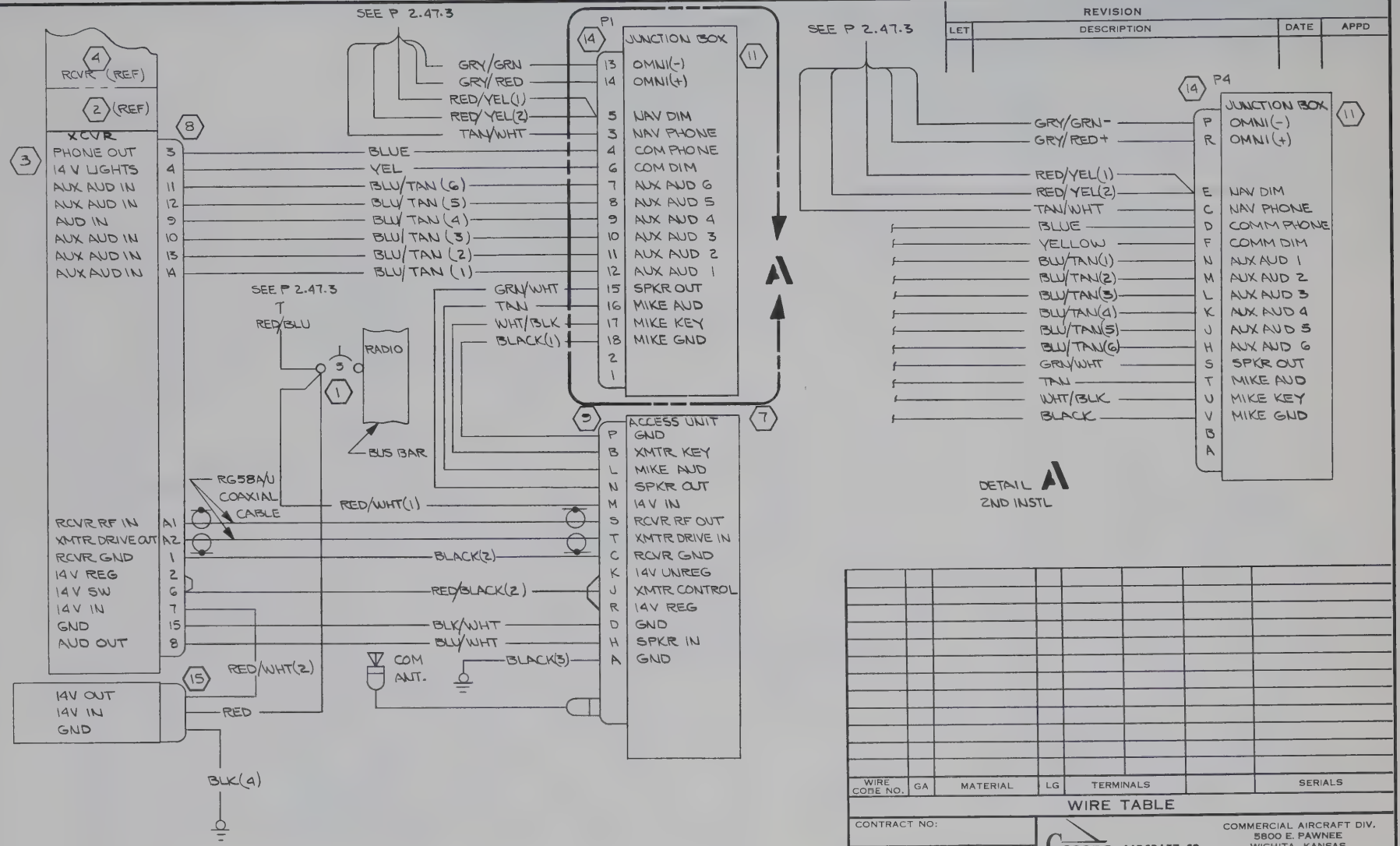

REVISION			
LET	DESCRIPTION	DATE	APPD

WIRE CODE NO.	GA	MATERIAL	LG	TERMINALS		SERIALS

WIRE TABLE

ITEM NO.	PART NO.	DESCRIPTION

EQUIPMENT TABLE

CES-1000 IS APPLICABLE
VENDOR CODES PER S-1400
CES-XXXX=CESSNA SPEC. NO.
S-XXX OR CMXXXX=CESSNA STD. NO.

SUPERSEDES:

SUPERSEDED BY:

CONTRACT NO:

	NAME	DATE
DESIGN	Conron	12-5-68
GROUP	H. Wire	12-5-68
DRAWN	F. RUNNER	11-28-68
CHECK	HARRIS	12-2-68
STRESS	GUTHRIE	12-4-68
PROJECT		
APPD	SWANEY	12-3-68

Cessna AIRCRAFT CO.
COMMERCIAL AIRCRAFT DIV.
5800 E. PAWNEE
WICHITA, KANSAS

TITLE
WIRING DIAGRAM — CESSNA 400 NAV/COMM (ARC TYPE RT-522 & RT-532A)

SIZE	CODE IDENT. NO.	DWG NO.
C	71379	0770400

SCALE: NONE | 180 & 185 | PAGE: 2.47.4

FORM NO. 60-215A

SER 18051876 & ON

REVISION			
LET	DESCRIPTION	DATE	APPD
A	REFER TO PAGE 2.48.1.0		

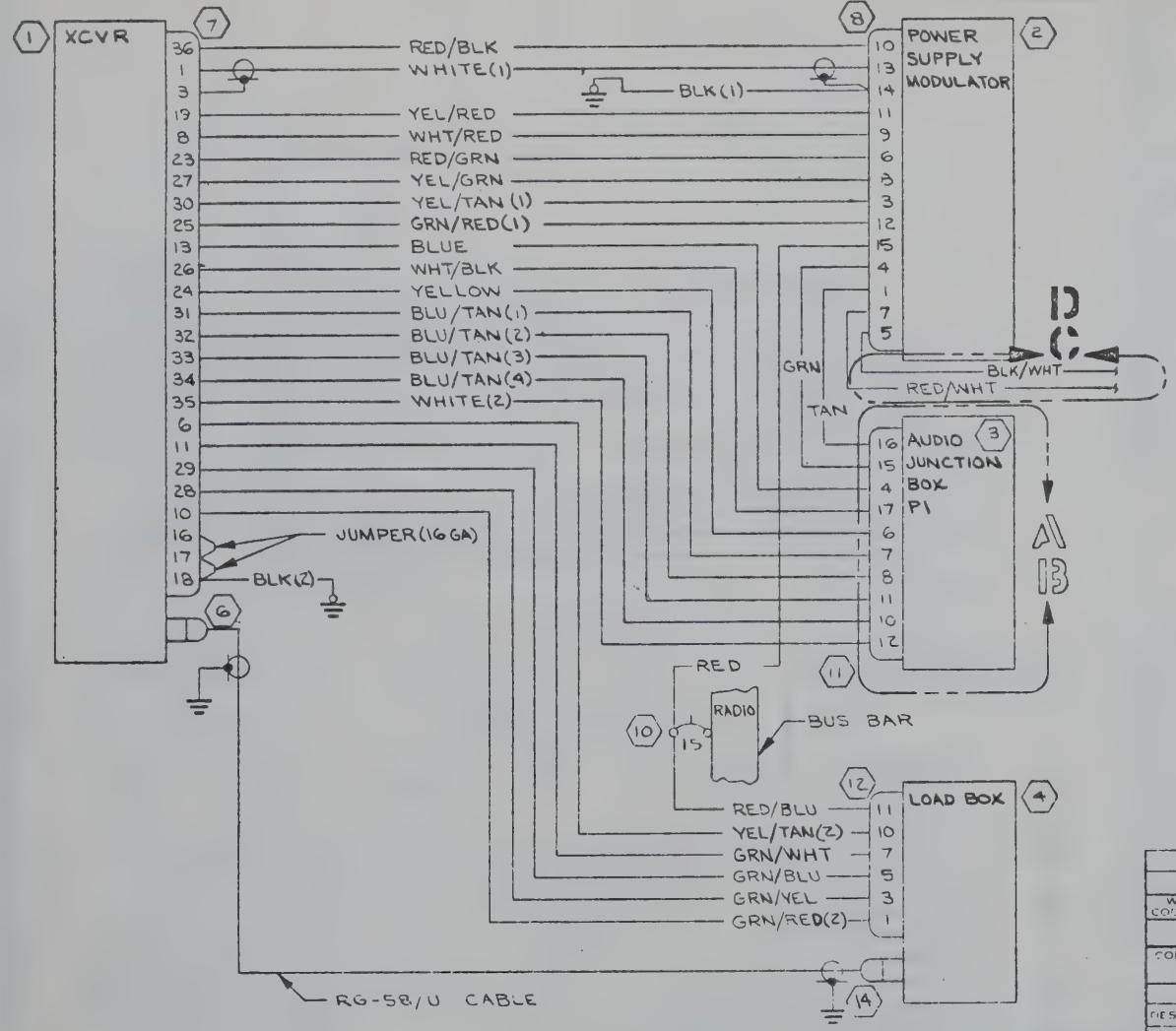

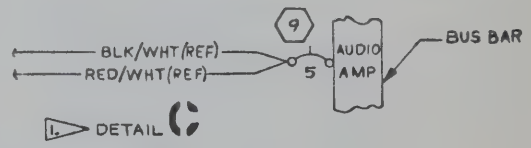

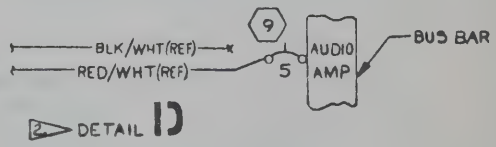

WIRE CODE NO	GA	MATERIAL	LG	TERMINALS		SERIALS

WIRE TABLE

PART NO	DESCRIPTION
	EQUIPMENT TABLE

CES-1000 IS APPLICABLE
VENDOR CODES PER S-1400
CES-XXXX=CESSNA SPEC. NO.
S-XXX OR CMXXXX=CESSNA
STD. NO.

SUPERSEDES:

SUPERSEDED BY:

CONTRACT NO:

	NAME	DATE
DESIGN	[illegible]	2-21-68
GROUP	[illegible]	2-21-68
DRAWN	C. GARCIA	2-15-68
CHECK	LAIRIE [illegible]	2-17-68
STRESS		
PROJECT	[illegible]	3-1-68
APPD	SSM	2-20-68

Cessna AIRCRAFT CO.
COMMERCIAL AIRCRAFT DIV.
5800 E PAWNEE
WICHITA, KANSAS

TITLE
WIRING DIAGRAM —
CESSNA 300 HF

SIZE	CODE IDENT. NO.	DWG NO.
C	71379	0770400

SCALE: NONE | 180, 185 | PAGE: 2.48.1.1

ED(RR 0182C (SR5438)(SR5439)

FORM 40 86 213A

REVISION			
LET	DESCRIPTION	DATE	APPD

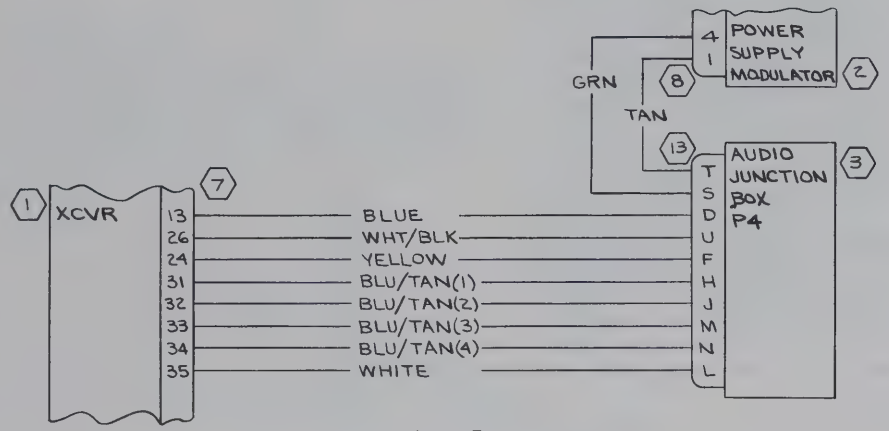

DETAIL A
2ND INSTL

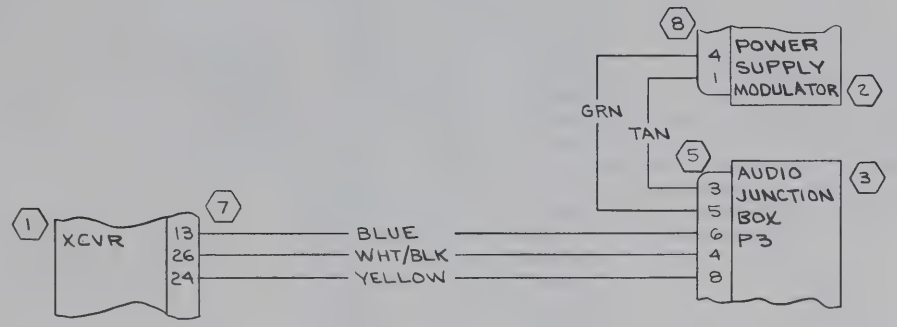

DETAIL B
3RD INSTL
(BLU/TAN WIRES TO BE CAPPED ON 3RD INSTL)

WIRE CODE NO.	GA	MATERIAL	LG	TERMINALS		SERIALS

WIRE TABLE

ITEM NO.	PART NO.	DESCRIPTION

EQUIPMENT TABLE

CES-1000 IS APPLICABLE
VENDOR CODES PER S-1400
CES-XXXX=CESSNA SPEC. NO.
S-XXX OR CMXXXX=CESSNA STD. NO.

SUPERSEDES:

SUPERSEDED BY:

CONTRACT NO:

	NAME	DATE
DESIGN	G Wood	2-29-68
GROUP	A. Wind	2-21-68
DRAWN	C. GARCIA	2-15-68
CHECK	LAURIE RRS	2-17-68
STRESS	Wethington	2-21-68
PROJECT	D.M. Kolb	3-1-68
APPD	JSM	2-20-68

Cessna AIRCRAFT CO.
COMMERCIAL AIRCRAFT DIV.
5800 E. PAWNEE
WICHITA, KANSAS

TITLE
WIRING DIAGRAM — CESSNA 300 HF

SIZE	CODE IDENT. NO.	DWG NO.
C	71379	0770400

SCALE: NONE | 180, 185 | PAGE: 2.48.1.2

FORM NO. 80-215A

EDRR01820 (SR5438)(SR5439)

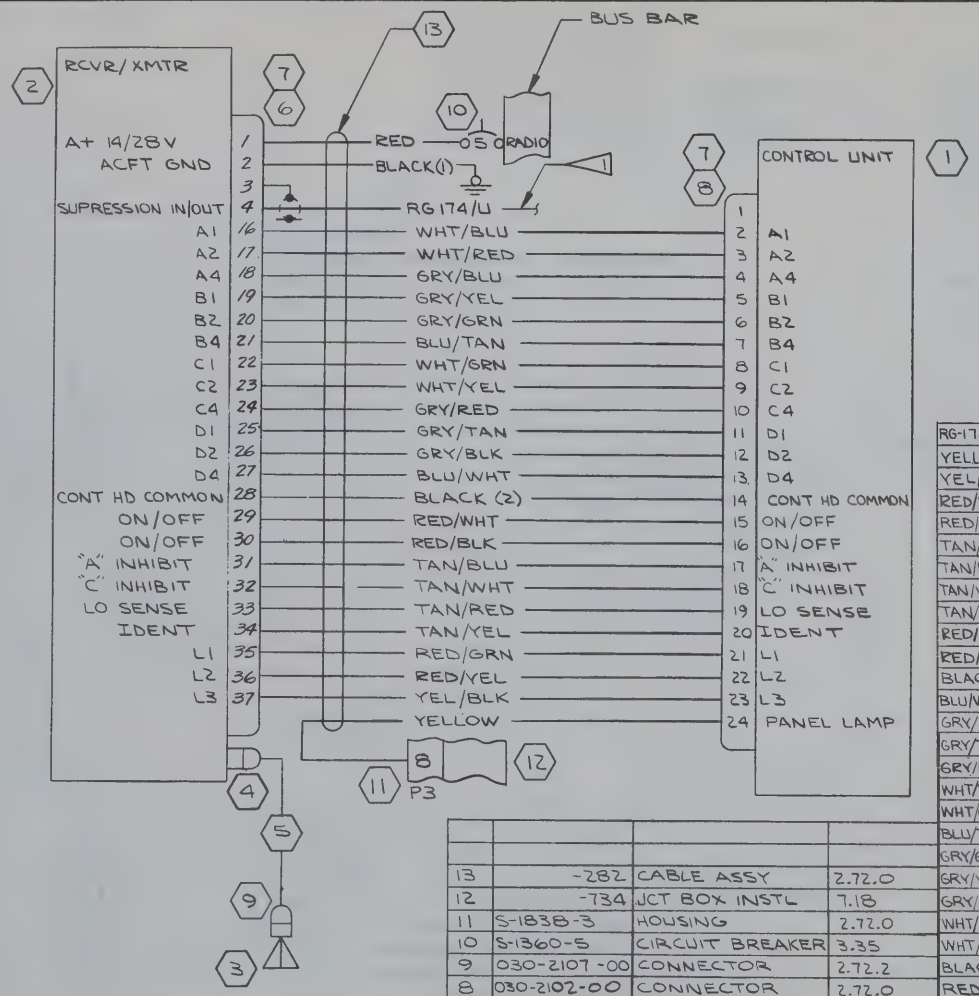

REVISION			
LET	DESCRIPTION	DATE	APPD
A	BY REV: GRY/RED WAS GRY/GRN(2), RED/WHT WAS RED(1), RED/BLK WAS RED(2), RED/YEL WAS YEL/WHT, YELLOW WAS GRY/YEL(2), GRY/YEL WAS GRY/YEL(1) GRY/GRN WAS GRY/GRN(1), RED WAS RED(3) ED&RR 10332 (SR5905)	RLY 1-23-69	JWH MDD GAL H/W

13	-282	CABLE ASSY	2.72.0
12	-734	JCT BOX INSTL	7.18
11	S-1838-3	HOUSING	2.72.0
10	S-1360-5	CIRCUIT BREAKER	3.35
9	030-2107-00	CONNECTOR	2.72.2
8	030-2102-00	CONNECTOR	2.72.0
7	030-1019-00	CA CLAMP HALF	3.35 & 4.25
6	030-2109-00	CONNECTOR	2.72.0
5	-283	CABLE ASSY	2.72.2
4	030-0060-00	CONNECTOR	2.72.2
3	C589505-0101	ANTENNA	6.17
2	C589504-0101	RCVR/XMTR UNIT 12V	4.25
1	C589503-0101	CONTROL PANEL 12V	3.35
ITEM NO.	PART NO.	DESCRIPTION	PAGE

EQUIPMENT TABLE

RG-174/U		CABLE		SOLDER			
YELLOW	20	-20-4		SOLDER	S-1837-1		
YEL/BLK	22	-22-4-0			SOLDER		
RED/YEL	22	-22-2-4					
RED/GRN	22	-22-2-5					
TAN/YEL	22	-22-10-4					
TAN/RED	22	-22-10-2					
TAN/WHT	22	-22-10-9					
TAN/BLU	22	-22-10-6					
RED/BLK	18	-18-2-0					
RED/WHT	18	-18-2-9					
BLACK(2)	20	-20-0					
BLU/WHT	22	-22-6-9					
GRY/BLK	22	-22-8-0					
GRY/TAN	22	-22-8-10					
GRY/RED	22	-22-8-2					
WHT/YEL	22	-22-9-4					
WHT/GRN	22	-22-9-5					
BLU/TAN	22	-22-6-10					
GRY/GRN	22	-22-8-5					
GRY/YEL	22	-22-8-4					
GRY/BLU	22	-22-8-6					
WHT/RED	22	-22-9-2					
WHT/BLU	22	-22-9-6			SOLDER		
BLACK(1)	18	-18-0			S-1361-2-8		
RED	18	-18-2		SOLDER	S-1361-2-8		
WIRE CODE NO.	GA	MATERIAL	LG	TERMINALS			SERIALS

WIRE TABLE

NOTES:

1. SUPRESSOR CABLE ROUTES WITH CABLE TO CONTROL PANEL. CENTER CONDUCTOR CONNECTS TO PIN 4 OF 300 DME CABLE & SHIELD CONNECTS TO PIN 8. CENTER CONDUCTOR TERMINATED WITH END CAP WHEN NOT USED

CES-1000 IS APPLICABLE VENDOR CODES PER S-1400
CES-XXXX=CESSNA SPEC. NO.
S-XXX OR CMXXXX=CESSNA STD. NO.

SUPERSEDES:

SUPERSEDED BY:

CONTRACT NO:

	NAME	DATE
DESIGN	VR SIPES	8/9/68
GROUP	[illegible]	11/12/68
DRAWN	YOUNGERS	10-31-68
CHECK	HARRIS	11-5-68
STRESS	GUTHRIE	11-14-68
PROJECT	[illegible]	[illegible]
APPD	SWANEY	11-7-68

Cessna AIRCRAFT CO.
COMMERCIAL AIRCRAFT DIV.
5800 E. PAWNEE
WICHITA, KANSAS

TITLE
WIRING DIAGRAM—
CESSNA 300 TRANSPONDER

SIZE	CODE IDENT. NO.	DWG NO.
C	71379	0770400

SCALE: NONE | 180-185 | PAGE: 2.72.1

FORM NO. 80-215A

ED&RR 10045 (SR5905)

(SR 4359)

CHG LET	REVISION	BY / DATE	CHK / APPD

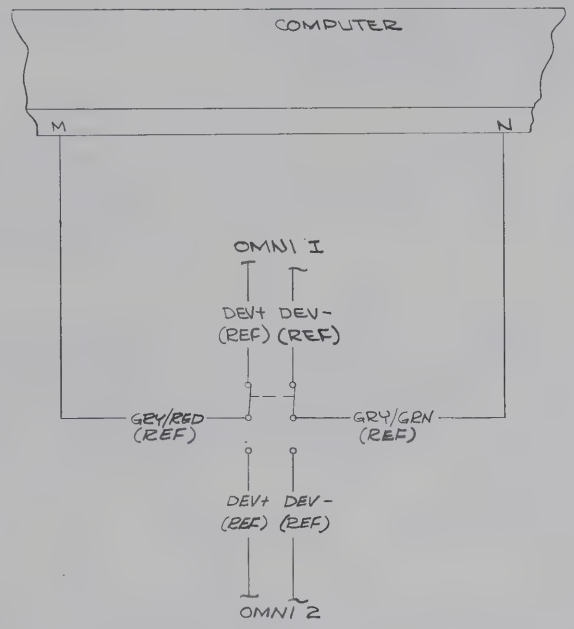

WIRE CODE NO.	GA	MATERIAL	LG	TERMINALS		SERIALS

WIRE TABLE

CESSNA AIRCRAFT CO. COMMERCIAL AIRCRAFT DIVISION, WICHITA, KANSAS

	NAME	DATE
DRAWN	JOHNSON	10-1-63
GROUP	V. Tessant	12-22-64
CHECK	R. Stycks	10-29-63
PROJ	[illegible]	12-22-64

TITLE: WIRING DIAGRAM — OMNI SELECTOR SWITCH (OPT)

Cessna.

DWG NO. 0700092

SUPERSEDED BY	SUPERSEDES	MODEL	REV.	PAGE
		180-185		14.3

ITEM NO	PART NO.	DESCRIPTION	INSTALLED ON

EQUIPMENT TABLE

FORM NO. 80-161

REVISION			
LET	DESCRIPTION	DATE	APPD
	SEE PAGE 14.4.0 FOR REVISIONS		

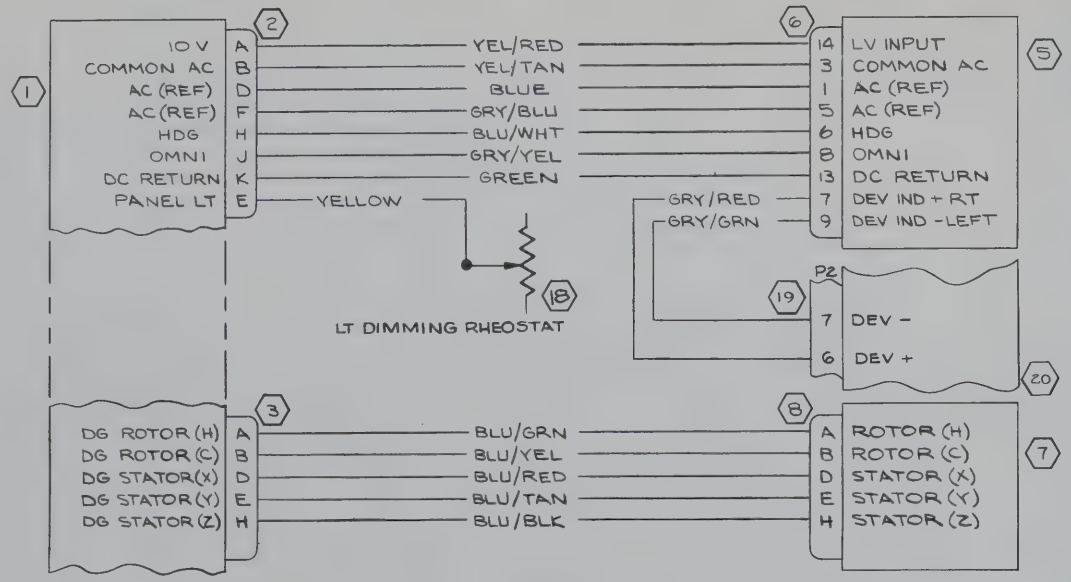

WIRE CODE NO.	GA	MATERIAL	LG	TERMINALS		SERIALS

WIRE TABLE

ITEM NO.	PART NO.	DESCRIPTION
		EQUIPMENT TABLE

CES-1000 IS APPLICABLE
VENDOR CODES PER S-1400
CES-XXXX=CESSNA SPEC. NO.
S-XXX OR CMXXXX=CESSNA
STD. NO.

SUPERSEDES: P14.1.1 & P14.1.2

SUPERSEDED BY:

CONTRACT NO:

	NAME	DATE
DESIGN	LAURIE	
GROUP	R. Wiw	5-24-68
DRAWN	YOUNGERS	5-7-68
CHECK	G IRVIN	5-10-68
STRESS	RJW	5-23-68
PROJECT	D.G. Kollen	5-27-68
APPD	SWANEY	5-10-68

Cessna AIRCRAFT CO.
COMMERCIAL AIRCRAFT DIV.
5800 E. PAWNEE
WICHITA, KANSAS

TITLE
WIRING DIAGRAM —
CESSNA 300 NAV-O-MATIC
AUTOPILOT (14VOLT)

SIZE	CODE IDENT. NO.	DWG NO.
C	71379	0700092

SCALE: NONE | 180-185 | PAGE: 14.4.1

FORM NO. 80-215A

EDERR 02325 (SR5751)

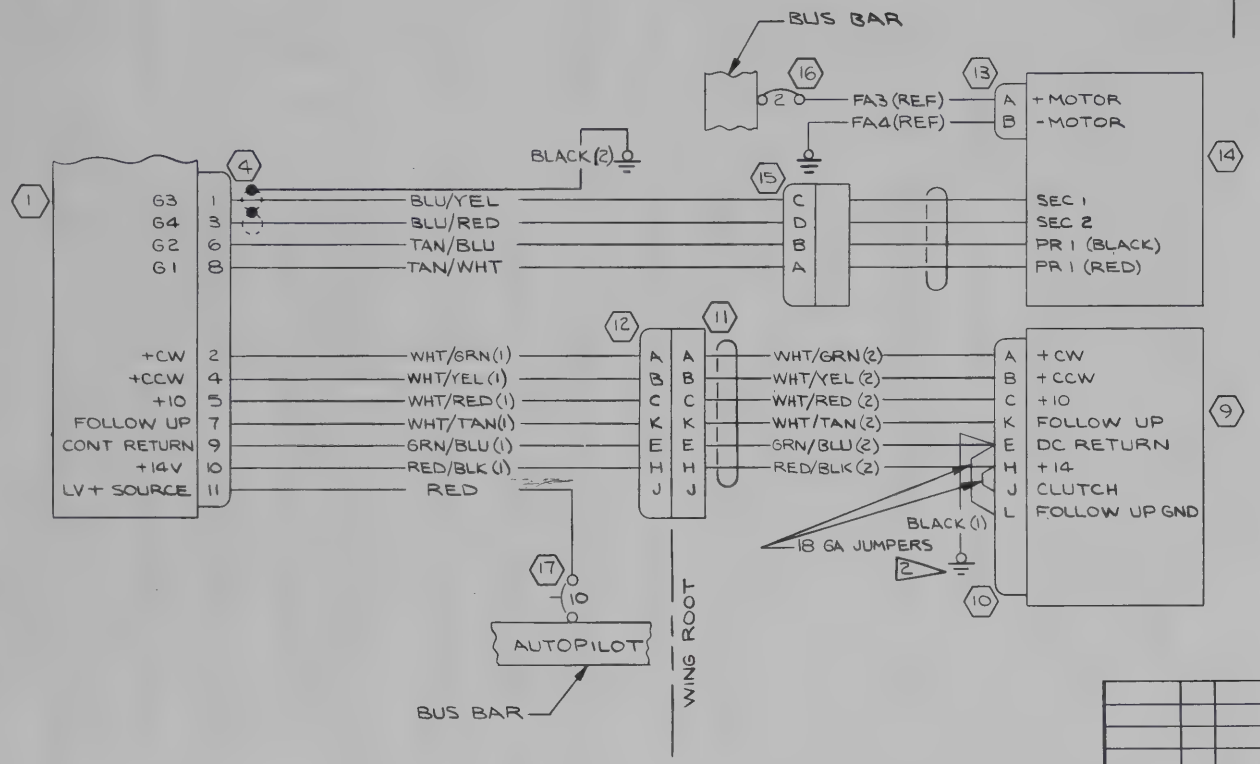

REVISION			
LET	DESCRIPTION	DATE	APPD

WIRE CODE NO.	GA	MATERIAL	LG	TERMINALS		SERIALS

WIRE TABLE

ITEM NO.	PART NO.	DESCRIPTION

EQUIPMENT TABLE

CES-1000 IS APPLICABLE
VENDOR CODES PER S-1400
CES-XXXX=CESSNA SPEC. NO.
S-XXX OR CMXXXX=CESSNA
STD. NO.

SUPERSEDES: P14.1.1 & P14.1.2

SUPERSEDED BY:

CONTRACT NO:

	NAME	DATE
DESIGN	LAURIE	
GROUP	H. Wiley	5-29-68
DRAWN	YOUNGERS	5-7-68
CHECK	G IRVIN	5-10-68
STRESS	RAW	5-23-68
PROJECT	D.C. Kolb	5-27-68
APPD	SWANEY	5-10-68

Cessna AIRCRAFT CO.
COMMERCIAL AIRCRAFT DIV.
5800 E. PAWNEE
WICHITA, KANSAS

TITLE
WIRING DIAGRAM —
CESSNA 300 NAV-O-MATIC
AUTOPILOT (14VOLT)

SIZE	CODE IDENT. NO.	DWG NO.
C	71379	0700092

SCALE: NONE | 180-185 | PAGE: 14.4.2

FORM NO. 80-215A

ED&RR 02325 (SR5751)

TABLE OF CONTENTS

PAGE NO.	TITLE	DATE ISSUED	REV
	182 SERIAL 18259306 & ON **A182 SERIAL A182-0117 & ON**		
2.0.2	Radio Spkr, Phone Jack, Mike, Light Rheo. & Pwr Ckts	8-16-68	NC
2.0.3	S. D. - Audio Junction Box, Internal Wiring	3-7-69	NC
2.3.1.4	Cessna 300 Nav/Com Type 540A, 517R with IN-525A & IN-514	8-16-68	NC
2.3.1.5	Cessna 300 Nav/Com (Type 540A, 517R with IN-525A & IN-514)	8-6-68	NC
2.4.2	Cessna 300 Marker Beacon (Type 502B)	8-16-68	NC
2.6.0.1	Cable Assy - Audio, Omni & Xmtr Selector Switches	8-30-68	A
2.6.1.1	W. D. - Audio Selector Switch	9-5-68	A
2.6.2.1	W. D. - Omni Audio Transmitter Switch	7-9-68	NC
2.6.3.1	W. D. - Transmitter Selector Switch	7-9-68	NC
2.6.4	Typical Switching - Narco Mark 12 & ADF	1-28-64	NC
2.6.8.1	W. D. - Typical Switching, Narco Mark 12A & ADF	12-5-68	NC
2.7.3	Cessna Com 300 (ARC Type 524A)	8-18-68	NC
2.12	W. D. - Cessna ADF 300 (ARC Type 521B)	8-16-68	B
2.20.1	W. D. - Cessna DME 300	8-16-68	B
2.25.2	Cable Assembly - Narco Mark 12A	8-16-68	NC
2.25.3	W. D. - Narco Mark 12A with VOA-8 & VOA-9	8-16-68	NC
2.36.2	W. D. - King KA-25C Audio Amplifier	8-16-68	NC
2.37.1	Narco UGR-2 Glideslope with Narco Mark 12A & VOA-9	11-28-67	A
2.38.1	W. D. - Cessna Glideslope 400 (ARC Type R-543B)	12-20-67	A
2.39.1	W. D. - Cessna 400 Glideslope (ARC Type R-543B)	12-20-67	A
2.40.0	Cable Assy - Audio & Transmitter Selector Switches	8-16-68	A
2.40.3	W. D. - Typical Switching, Narco Mark 12 A & ADF	8-16-68	NC
2.40.4	W. D. - Audio Switching - Narco Mark 12A	8-16-68	NC
2.41.3.1	W. D. - Cessna 400 Nav/Com (ARC Type RT-522A & RT-532A)	10-9-68	A
2.41.3.2	W. D. - Cessna 400 Nav/Com (ARC Type RT-522A & RT-532A)	10-9-68	A

TABLE OF CONTENTS

PAGE NO.	TITLE	DATE ISSUED	REV
2.44.1	W. D. - Mike Key - Control Wheel	8-16-68	NC
2.45.1.1	Cessna 300 HF (Type PT10-A)	7-9-68	A
2.45.1.3	W. D. - Cessna 300 HF (Type PT10-A)	7-9-68	NC
2.46.0	Cessna 400 Transponder (ARC Type 506A)	7-23-68	NC
2.47.1	W. D. - Cessna 400 ADF (ARC Type 324A)	8-2-68	NC
2.48.1	W. D. - Cessna 300 Transponder	2-3-69	A
2.49.0	W. D. - Cessna 400 ADF (ARC Type 324A)	9-5-68	A
	DRAWING NUMBER 0770610		
17.23.3	W. D. - Cessna 400 Nav-O-Matic (Opt.)	7-23-68	A
17.23.4	W. D. - Cessna 400 Nav-O-Matic (Opt.)	6-6-68	NC
17.23.5	W. D. - Nav-O-Matic 400 System (Opt.)	6-6-68	NC
17.26.1	W. D. - Cessna 300 Nav-O-Matic Autopilot (14-Volt)	7-23-68	A
17.26.2	W. D. - Cessna 300 Nav-O-Matic Autopilot (14-Volt)	6-6-68	NC

REVISION			
LET	DESCRIPTION	DATE	APPD

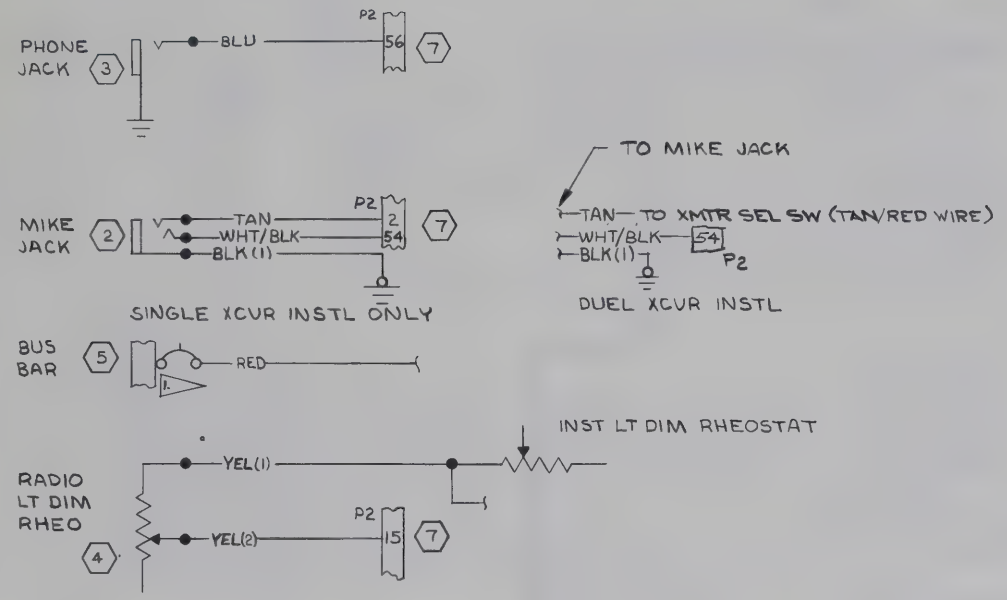

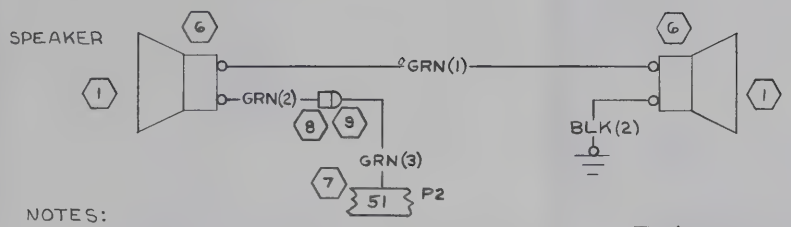

NOTES:

1. AMP RATING OF S-1360 CKT BKR TO BE DETERMINED BY INSTL
2. S-1635-1 PIN & S-1637-1 HOUSING-CAP
3. WIRES TO BE OF SUFICIENT LENGTH TO ALLOW CONNECTION TO ALL POSSIBLE RADIO COMBINATION TERMINALS TO ATTACH TO WIRES AS REQD BY THE VARIOUS RADIO INSTALLATIONS

ITEM NO.	PART NO.	DESCRIPTION
9	S-1637-2	HOUSING-PLUG
8	S-1637-1	HOUSING-CAP
7	S-1838-1	HOUSING
6	S-1829-1	TERMINAL
5	S-1360	CIRCUIT BKR
4	0413126-5	RHEOSTAT
3	S-1612-1	PHONE JACK
2	S-1102-1	MIKE JACK
1	C596505-0101	SPEAKER

EQUIPMENT TABLE

CES-1000 IS APPLICABLE VENDOR CODES PER S-1400
CES-XXXX=CESSNA SPEC. NO.
S-XXX OR CMXXXX=CESSNA STD. NO.

SUPERSEDES: R 2.0.1

SUPERSEDED BY:

WIRE CODE NO.	GA	MATERIAL	LG	TERMINALS			SERIALS
GRN(3)	20	-20-5		S-1837-1	S-1636-1		
WHT/BLK	22	-22-9-0		S-1837-1	SOLDER		
TAN	22	-22-10		S-1837-1	SOLDER		
RED	16	-16-2		3.	S-1367-2-6		
BLUE	22	-22-6		S-1837-1	SOLDER		
YEL(2)	18	-18-4		SOLDER	S-1837-1		
YEL(1)	18	-18-4		SOLDER	3.		
GRN(2)	20	-20-5		S-1635-1	S-1829-1		
GRN(1)	20	-20-5		S-1829-1	S-1829-1		
BLK(2)	22	-22-0		S-1829-1	S-1367-1-8		
BLK(1)	22	-22-0		S-1367-1-8	SOLDER		

WIRE TABLE

CONTRACT NO:

	NAME	DATE
DESIGN	SIPES VR	6/7/68
GROUP	H. Wind	8-19-68
DRAWN	SCRAPER	7-30-68
CHECK	HARRIS	8-1-68
STRESS	ASHER	8-6-68
PROJECT		8-21-68
APPD	MDS	8-1-68

Cessna AIRCRAFT CO.
COMMERCIAL AIRCRAFT DIV.
5800 E. PAWNEE
WICHITA, KANSAS

TITLE
WIRING DIAGRAM — RADIO SPEAKER, PHONE JACK, MIKE, LIGHT RHEO. & PWR CKTS

SIZE	CODE IDENT. NO.	DWG NO.
C	71379	0770750

SCALE: NONE | 182 | PAGE: 2.0.2

FORM NO. 80-215A

ED# RR 02391 (SR5852) II

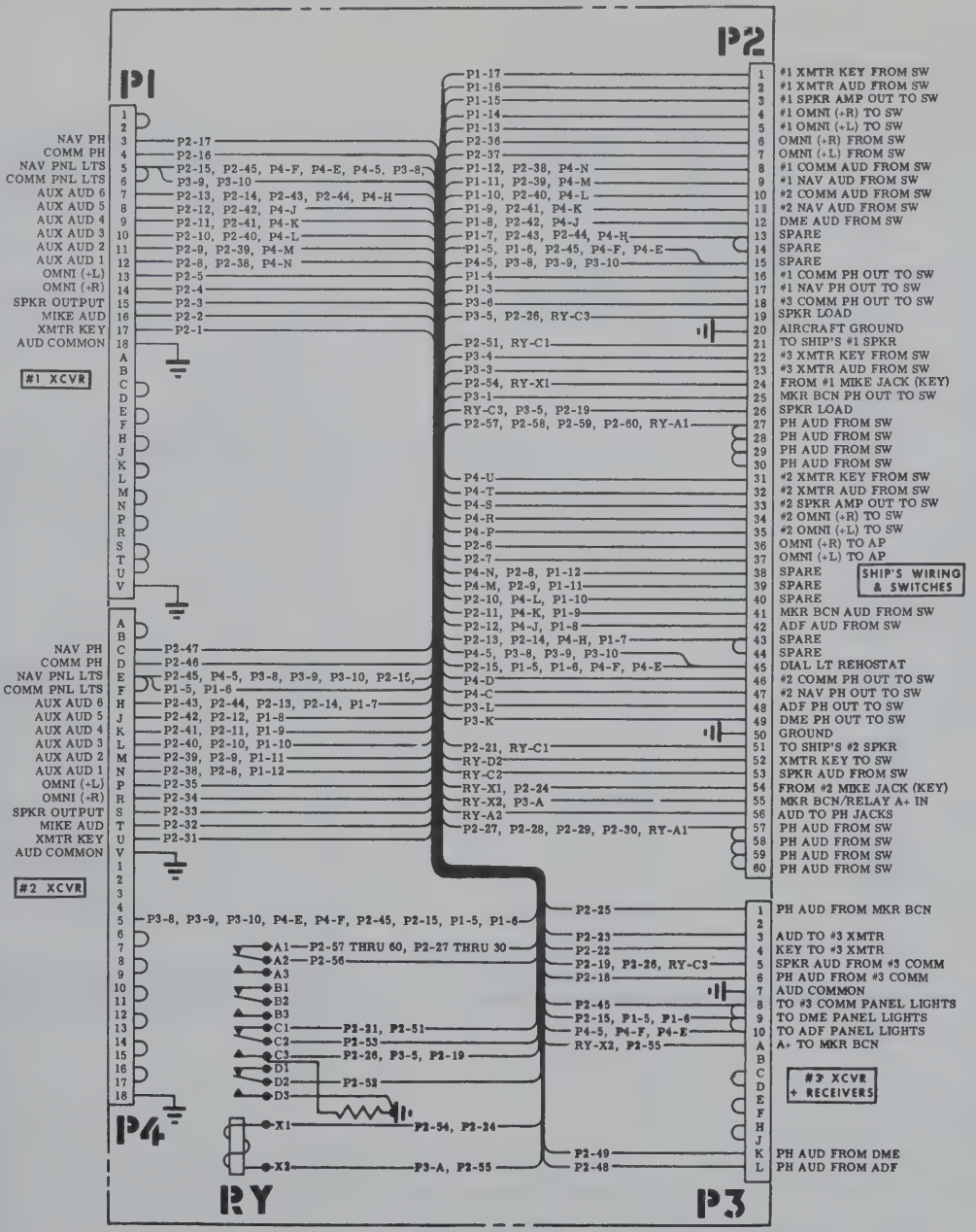

REVISIONS			
LTR	DESCRIPTION	DATE	APPROVED
A	BY REV: 465195-2 WAS 46195-2; ADD NOTE 8 EDRR 24170	DGP 4-5	

NOTES:

1. THIS DRAWING FOR TECHNICAL USE ONLY
2. P1 AND P4 MATE WITH S-1838-2 HOUSING (AMP 1-582191-5)
3. P2 MATES WITH S-1838-1 HOUSING (AMP 480146-7)
4. P3 MATES WITH S-1838-3 HOUSING (AMP 582963-2)
5. ALL THE ABOVE HOUSINGS USE S-1837-1 CONTACT PINS (AMP 42717-3LP) AND S-1836-1 KEYING PLUGS (AMP 582501-1)
6. CONTACTS CRIMP ON WITH AMP TOOL 90017
7. CONTACTS EXTRACT WITH AMP TOOL 465195-2
8. IF A CRIMPING TOOL IS NOT AVAILABLE WIRES MAY BE SOLDERED TO PINS IN LIEU OF CRIMPING

CONTRACT NO:	NAME	DATE
DESIGN	V R SIPES	1-17-69
GROUP	H. Wise	3-11-69
DRAWN	NUCKOLLS	2-7-69
CHECK	HARRIS	3-4-69
STRESS	W. DALE	3-7-69
PROJECT	H McCarter	3-11-69
APPD	M O'Leary	3-5-69

Cessna AIRCRAFT CO. — COMMERCIAL AIRCRAFT DIV. 5800 E. PAWNEE WICHITA, KANSAS

TITLE: SCHEMATIC DIAGRAM - AUDIO JUNCTION BOX, INTERNAL WIRING

SIZE	CODE IDENT. NO.	DWG NO.
C	71379	0770750

SCALE: NONE | 182 | PAGE: 2.0.3

ED & RR 10361 SER 18251994 & ON

NOTES:

1. CESSNA 300 NAV/COM AMPLIFIERS ARE OPERATED "ALWAYS HOT" SPKR OUTPUTS FROM EACH SYSTEM DRIVE EITHER 5Ω 10 WATT DUMMY LOAD OR THE SPKR AS DETERMINED BY TRANSMITTER SELECTED

REVISION			
LET	DESCRIPTION	DATE	APPD

WIRE CODE NO.	GA	MATERIAL	LG	TERMINALS		SERIALS
YEL	18	-18-4		SOLDER	S-1837-1	
WHT/YEL	22	-22-9-4			SOLDER	
WHT/TAN	22	-22-9-10			SOLDER	
WHT/GRN	22	-22-9-5			SOLDER	
WHT/BLK	22	-22-9-0			S-1837-1	
TAN	22	-22-10			S-1837-1	
RED/WHT	18	-18-2-9			S-1370-1	
RED/BLK	18	-18-2-0			S-1370-1	
RED	16	-16-2			S-1367-2-6	
GRY/RED(2)	22	-22-8-2			S-1837-1	
GRY/RED(1)	22	-22-8-2			SOLDER	
GRY/GRN(2)	22	-22-8-5			S-1837-1	
GRY/GRN(1)	22	-22-8-5			SOLDER	
GRN/WHT	20	-20-5-9			S-1837-1	
BLU/YEL	22S	S-1491-22-6-4			SOLDER	
BLU/WHT	22S	S-1491-22-6-9			SOLDER	
BLU/TAN(5)	22	-22-6-10			S-1837-1	
BLU/TAN(4)	22	-22-6-10				
BLU/TAN(3)	22	-22-6-10				
BLU/TAN(2)	22	-22-6-10				
BLU/TAN(1)	22	-22-6-10			S-1837-1	
BLU/RED	22S	S-1461-22-6-2			SOLDER	
BLU/BLK	22S	S-1461-22-6-0			SOLDER	
BLU	22	-22-6			S-1837-1	
BLK (2)	22	-22-0			S-1837-1	
BLK (1)	16	-16-0		SOLDER	S-1367-2-8	

WIRE TABLE

ITEM NO.	PART NO.	DESCRIPTION	
11	36120-1114	XCVR (TYPE 517R)	00781
10	31640-0000	IND (TYPE IN-514)	00781
9	32350-0000	IND (TYPE IN-525A)	00781
8	18397	CONNECTOR	00781
7	0570084-1	JUNCTION BOX	
6	S-1838-2	CONNECTOR	
5	29752	CONNECTOR	00781
4	29753	CONNECTOR	00781
3	S-1360-15	CIRCUIT BREAKER	
2	29747-0026	CONNECTOR	00781
1	37600-1114	XCVR (TYPE 540A)	00781

EQUIPMENT TABLE

CES-1000 IS APPLICABLE VENDOR CODES PER S-1400
CES-XXXX=CESSNA SPEC. NO.
S-XXX OR CMXXXX=CESSNA STD. NO.

SUPERSEDES: P.2.3.1.0, P.2.3.1.2

SUPERSEDED BY:

CONTRACT NO:

	NAME	DATE
DESIGN	SIPES VR	6/7/68
GROUP	H. Wind	8-19-68
DRAWN	SCRAPER	7-30-68
CHECK	HARRIS	8-1-68
STRESS	ASHER	8-6-68
PROJECT		8-21-68
APPD	MDS	8-1-68

Cessna AIRCRAFT CO.
COMMERCIAL AIRCRAFT DIV.
5800 E. PAWNEE
WICHITA, KANSAS

TITLE
WIRING DIAGRAM — CESSNA 300 NAV/COM (TYPE 540A, 517R WITH IN525A & IN-514)

SIZE	CODE IDENT. NO.	DWG NO.
C	71379	0770750

SCALE: NONE | 182 | PAGE: 2.3.1.4

FORM NO. 80-215A

ED&RR 02391 (SR5852) IX

REVISION			
LET	DESCRIPTION	DATE	APPD

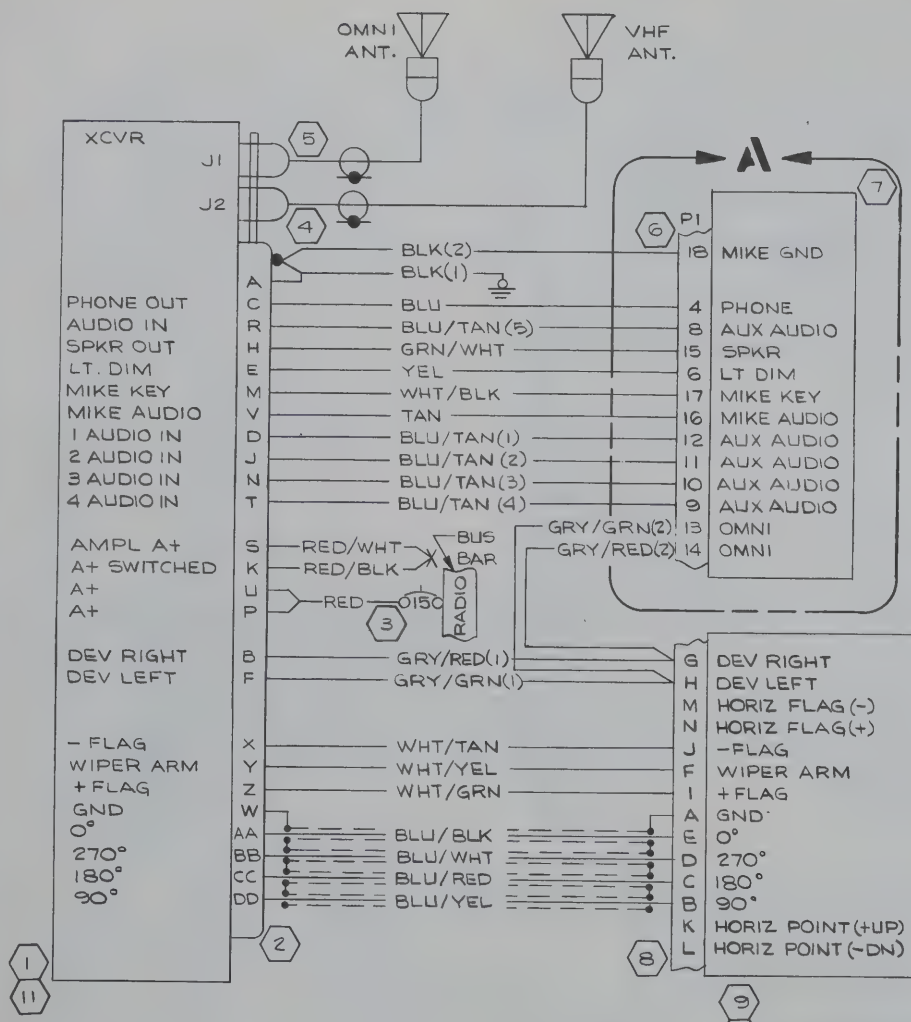

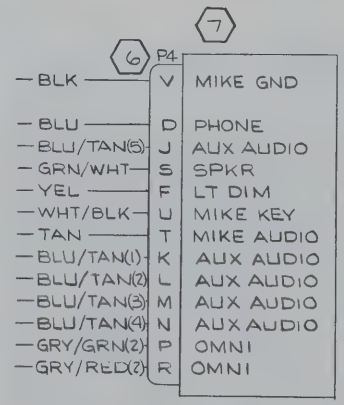

FOR OPTIONAL GLIDE-SLOPE CHANNEL SECTION

A	MC-A
B	MC-B
D	MC-D
E	MC-E
F	FREQ COMMON
C	MC-C
M	1/10 A
H	1/10 B
R	GND
J	1/10 C
K	1/10 D
N	OFF/ON CONTROL
P	G.S. LV +
L	1/10E

DETAIL A
2ND RADIO INSTL

WIRE CODE NO.	GA	MATERIAL	LG	TERMINALS		SERIALS

WIRE TABLE

ITEM NO.	PART NO.	DESCRIPTION
		EQUIPMENT TABLE

CES-1000 IS APPLICABLE VENDOR CODES PER S-1400
CES-XXXX=CESSNA SPEC. NO.
S-XXX OR CMXXXX=CESSNA STD. NO.

SUPERSEDES: P2.3.1.1 P2.3.1.3
SUPERSEDED BY:

CONTRACT NO:

	NAME	DATE
DESIGN	SIPES VR	6/7/68
GROUP	H Wilson	8-19-68
DRAWN	SCRAPER	7-30-68
CHECK	HARRIS	8-1-68
STRESS	WINNER	8-6-68
PROJECT		
APPD	MDS	8-1-68

Cessna AIRCRAFT CO.
COMMERCIAL AIRCRAFT DIV.
5800 E. PAWNEE
WICHITA, KANSAS

TITLE
WIRING DIAGRAM — CESSNA 300 NAV/COM (TYPE 540A, 517R WITH IN525A & IN514)

SIZE	CODE IDENT. NO.	DWG NO.
C	71379	0770750

SCALE: NONE | 182 | PAGE: 2.3.1.5

FORM NO. 80-215A

EDERR02391 (SR5856)IX

NOTES:

1. "PHONE" & "LO" FUNCTION TO BE ON KEY WAY SIDE OF SW
2. PART OF -290 CABLE ASSY

REVISION			
LET	DESCRIPTION	DATE	APPD
A	BY REV: ADD RED WIRE(REF), PIN A, 10 AMP CKT BKR, BUS BAR, S-1367-1-12, -290, -204 & NOTE 2; PIN 41 WAS PIN 10; PIN 60 WAS PIN 28; RELOCATE RED/GRN WIRE ED & RR 10387	DLB 2-17-68	WH mos WCD HW JDH WMC

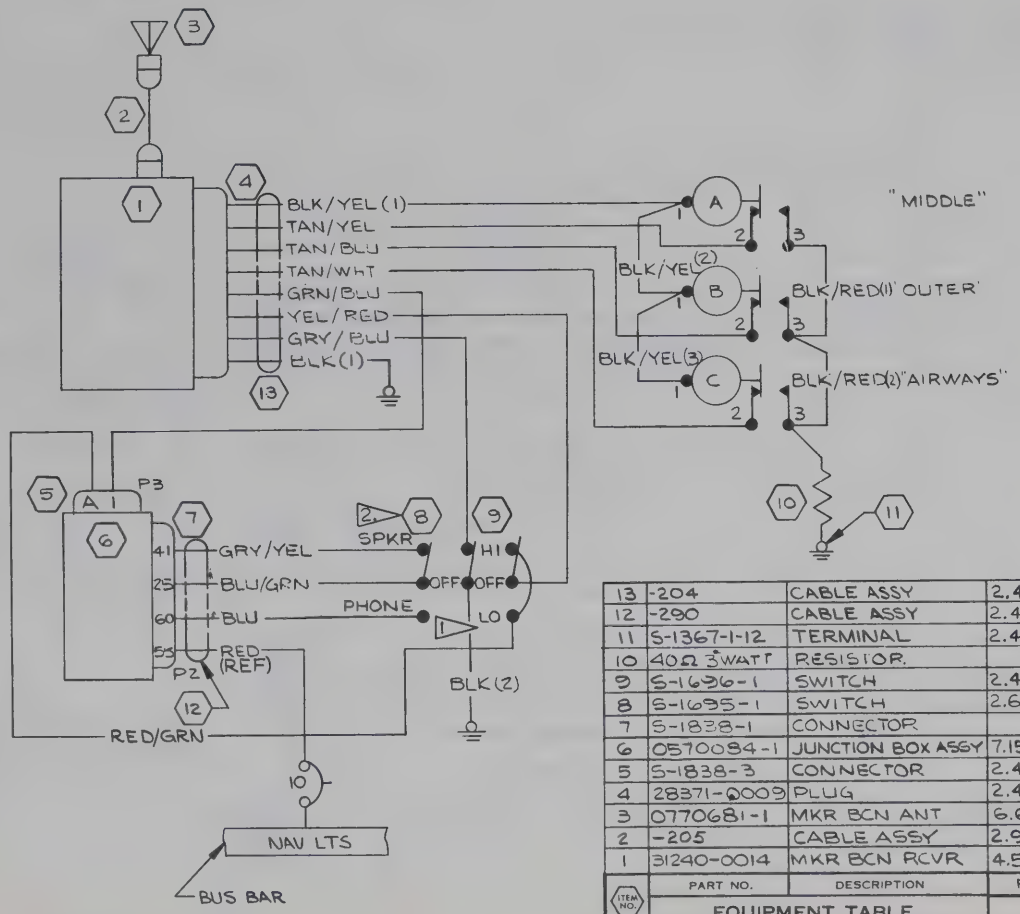

ITEM NO.	PART NO.	DESCRIPTION	PAGE
13	-204	CABLE ASSY	2.4.0
12	-290	CABLE ASSY	2.4.0
11	S-1367-1-12	TERMINAL	2.4.0
10	40Ω 3 WATT	RESISTOR	
9	S-1696-1	SWITCH	2.4.0
8	S-1695-1	SWITCH	2.6.0.1
7	S-1838-1	CONNECTOR	
6	0570084-1	JUNCTION BOX ASSY	7.15
5	S-1838-3	CONNECTOR	2.4.0
4	28371-0009	PLUG	2.4.0
3	0770681-1	MKR BCN ANT	6.6
2	-205	CABLE ASSY	2.9
1	31240-0014	MKR BCN RCVR	4.5

EQUIPMENT TABLE

WIRE CODE NO.	GA	MATERIAL	LG	TERMINALS		SERIALS
BLU/RED(2)	22	-22-0-2		SOLDER	SOLDER	
BLK/RED(1)	22	-22-0-4		SOLDER	SOLDER	
YEL/RED	20	-20-4-2		SOLDER	SOLDER	
TAN/YEL	22	-22-10-4			SOLDER	
TAN/WHT	22	-22-10-3			SOLDER	
TAN/BLU	22	-22-10-6			SOLDER	
RED/GRN	22	-22-2-5			S-1837-1	
GRY/YEL	22	-22-8-4			S-1837-1	
GRY/BLU	22	-22-8-6			SOLDER	
GRN/BLU	20	420-5-6			S-1837-1	
BLU/GRN	22	-22-6-5			S-1837-1	
BLU	22	-22-6			S-1837-1	
BLK/YEL(3)	22	-22-0-4			SOLDER	
BLK/YEL(2)	22	-22-0-4			SOLDER	
BLK/YEL(1)	22	-22-0-4			SOLDER	
BLK (2)	22	-22-0		SOLDER	S-1367-1-8	
BLK (1)	22	-22-0		SOLDER	S-1367-1-8	

WIRE TABLE

CES-1000 IS APPLICABLE VENDOR CODES PER S-1400 CES-XXXX=CESSNA SPEC. NO. S-XXX OR CMXXXX=CESSNA STD. NO.

SUPERSEDES: P. 2.4.1

SUPERSEDED BY:

CONTRACT NO:

	NAME	DATE
DESIGN	SIPES VR	6/7/68
GROUP	H. Wisd	8-19-68
DRAWN	SCRAPER	7-30-68
CHECK	HARRIS	8-1-68
STRESS	ASHER	8-6-68
PROJECT		8-21-68
APPD	MDS	8-1-68

Cessna AIRCRAFT CO.
COMMERCIAL AIRCRAFT DIV.
5800 E. PAWNEE
WICHITA, KANSAS

TITLE
WIRING DIAGRAM —
CESSNA 300 MARKER BEACON
(TYPE 502B)

SIZE C | CODE IDENT. NO. 71379 | DWG NO. 0770750

SCALE: NONE | 182 | PAGE: 2.4.2

FORM NO 80-215A

ED & RR 02391 SER 18259306 & ON

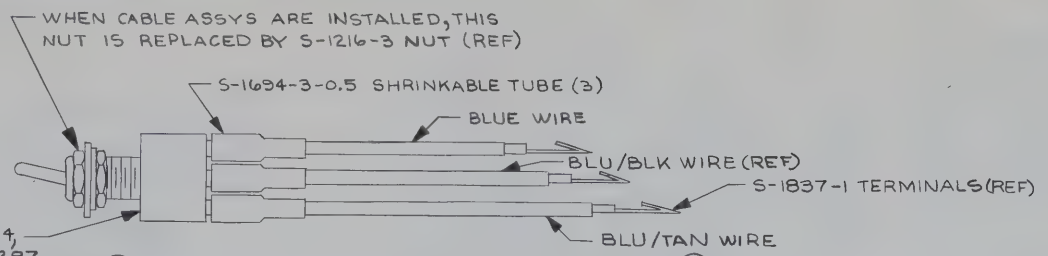

(273) CABLE ASSY – AUDIO SELECTOR SWITCH-COM 1
(274) CABLE ASSY – AUDIO SELECTOR SWITCH-NAV 1
(275) CABLE ASSY – AUDIO SELECTOR SWITCH-COM 2
(276) CABLE ASSY – AUDIO SELECTOR SWITCH-NAV 2
(286) CABLE ASSY – AUD SEL SW, DME
(287) CABLE ASSY – AUD SEL SW, ADF
(290) CABLE ASSY – MKR BCN SEL SW

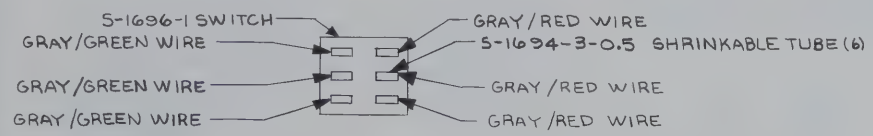

(277) CABLE ASSY-OMNI SELECTOR SWITCH (REAR VIEW)

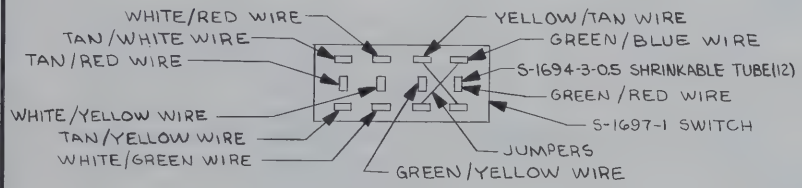

(278) CABLE ASSY-TRANSMITTER SELECTOR SW (REAR VIEW)

NOTES:

1. S-1694-3-0.5 TUBING INSTALLED ON ALL SWITCHES AS SHOWN ON AUDIO SELECTOR SWITCH
2. SWITCHES SHOWN WITH KEYWAY AT TOP
3. ALL WIRES ARE REFERENCED. REFER TO APPLICABLE WIRING DIAGRAM FOR FABRICATION INFORMATION

REVISION

LET	DESCRIPTION	DATE	APPD
A	BY REV: ADD -286, -287 & -290; COM 1 WAS SW #1; NAV 1 WAS SW #2; COM 2 WAS SW #3; NAV 2 WAS SW #4 ED & RR 10067 (SR5852) II	LES 8-26-68	JWH MDS A-A HRW VRS AKM
B	BY REV: S-1695-1/-290 WAS S-1695-2 ED & RR 10387	DLB 2-17-69	JWH JDW MDS WCD HRW

290	287	286	278	277	276	275	274	273	EFFECTIVE SERIALS	PAGE	PART NUMBER	DESCRIPTION
								1			S-1695-1	SWITCH
											-290	CABLE ASSY-MKR BCN SEL SW
											-287	CABLE ASSY-AUD SW, ADF
											-286	CABLE ASSY-AUD SW, DME
AR	AR	AR			AR	AR	AR	AR		2.6.1.1		WIRING
				AR						2.6.2.1		WIRING
			AR							2.6.3.1		WIRING
			1								S-1697-1	SWITCH
				1							S-1696-1	SWITCH
	1	1			1	1	1	1			S-1695-2	SWITCH
3	3	3	12	6	3	3	3	3			S-1694-3-0.5	SHRINKABLE TUBE
											-278	CABLE ASSY-XMTR SEL SW
											-277	CABLE ASSY-OMNI SEL SW
											-276	CABLE ASSY-AUD SW, NAV 2
											-275	CABLE ASSY-AUD SW, COM 2
											-274	CABLE ASSY-AUD SW, NAV 1
											-273	CABLE ASSY-AUD SW, COM 1
NO. REQD/NEXT ASSY												

LIST OF MATERIAL

DO NOT SCALE PRINT
BREAK ALL SHARP EDGES
A/R = AS REQD
CES-XXXX = CESSNA SPEC. NO.
S-XXX OR CMXXXX = CESSNA STD. NO.
$ = APPROX EQUAL SPACES
CES-1000 IS APPLICABLE VENDOR CODES PER S-1400

UNLESS OTHERWISE SPECIFIED
DIMENSIONS ARE IN INCHES
TOLERANCES ARE
DECIMALS: .00 ±.03, .000 ±.010 | ANGLES: MACH ±0 30' | FORMED ±2°
FOR HOLES, CSINKS, ETC., SEE CES 1012
FOR BASIC CODES SEE NAS 523
BJ=MS20470AD | BB=MS20426AD

SUPERSEDES: P. 2.6.0
SUPERSEDED BY:

CONTRACT NO:

	NAME	DATE
DESIGN	SIPES VR	6/3/68
GROUP	N. Wise	7-3-68
DRAWN	SCRAPER	6-25-68
CHECK	G. IRVIN	6-28-68
STRESS	R.F. GEIDE	7-1-68
PROJECT	[illegible]	7-8 [illegible]
APPD	SWANEY	6-28-68

Cessna AIRCRAFT CO.
COMMERCIAL AIRCRAFT DIV.
5800 E. PAWNEE
WICHITA, KANSAS

TITLE: CABLE ASSY – AUDIO, OMNI & XMTR SELECTOR SWITCHES

SIZE	CODE IDENT. NO.	
C	71379	0770750

SCALE: NONE | 182 | PAGE: 2.6.0.1

FORM NO. 80-221

ED & RR 02384 SER 18259306 & ON

NOTES:
1. SPEAKER FUNCTION ON KEYWAY SIDE OF SWITCH

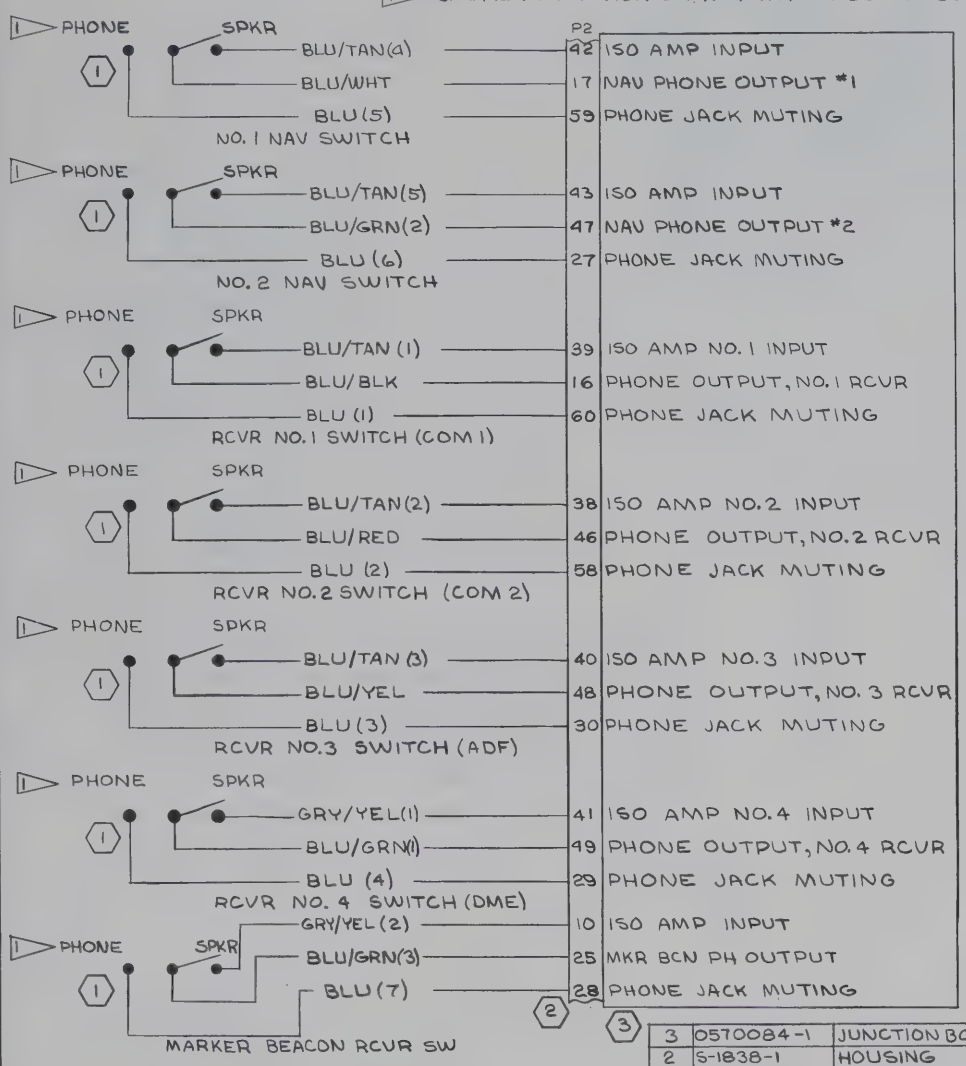

REVISION			
LET	DESCRIPTION	DATE	APPD
A	BY REV: ADD #1 NAV SW, #2 NAV SW, MKR BCN RCVR SW, BLU/TAN(4), BLU/TAN(5), GRY/YEL(2), BLU/WHT, BLU/GRN(2), BLU/GRN(3), BLU(5), BLU(6), BLU(7); 49 WAS 25; 29 WAS 28 28 (SR5852) IX	LES 8-26-68	JWH MDS ALA RFW

WIRE CODE NO.	GA	MATERIAL	LG	TERMINALS		SERIALS
BLU(7)	22	-22-6		SOLDER	S-1837-1	
BLU(6)		-22-6				
BLU(5)		-22-6				
BLU/WHT		-22-6-8				
BLU/TAN(5)		-22-6-10				
BLU/TAN(4)		-22-6-10				
BLU/GRN(3)		-22-6-5				
BLU/GRN(2)		-22-6-5				
GRY/YEL(2)		-22-8-4				
GRY/YEL(1)	22	-22-8-4		SOLDER	S-1837-1	
BLU/YEL		-22-6-4				
BLU/GRN(1)		-22-6-5				
BLU/TAN(3)		-22-6-10				
BLU/TAN(2)		-22-6-10				
BLU/TAN(1)		-22-6-10				
BLU/RED		-22-6-2				
BLU/BLK		-22-6-0				
BLU(4)		-22-6				
BLU(3)		-22-6				
BLU(2)		-22-6				
BLU(1)	22	-22-6		SOLDER	S-1837-1	

WIRE TABLE

ITEM NO.	PART NO.	DESCRIPTION	PAGE
3	0570084-1	JUNCTION BOX ASSY	7.15
2	S-1838-1	HOUSING	
1	S-1695-2	SWITCH	2.6.0.1

EQUIPMENT TABLE

CES-1000 IS APPLICABLE VENDOR CODES PER S-1400
CES-XXXX=CESSNA SPEC. NO.
S-XXX OR CMXXXX=CESSNA STD. NO.

SUPERSEDES: P2.6.1

SUPERSEDED BY:

CONTRACT NO:

	NAME	DATE
DESIGN	SIPES VR	6/3/68
GROUP	N. Wise	7-3-68
DRAWN	SCRAPER	6-25-68
CHECK	G. IRVIN	6-28-68
STRESS	R.F. GEIDE	7-1-68
PROJECT	[illegible]	7-5-68
APPD	SWANEY	6-28-68

Cessna AIRCRAFT CO.
COMMERCIAL AIRCRAFT DIV.
5800 E. PAWNEE
WICHITA, KANSAS

TITLE
WIRING DIAGRAM — AUDIO SELECTOR SWITCH

SIZE	CODE IDENT. NO.	DWG NO.
C	71379	0770750

SCALE: NONE | 182 | PAGE: 2.6.1.1

FORM NO. 80-215A

ED&RR02384 (SR5852) IX

NOTES:

1. OMNI 2 FUNCTION TO BE ON KEYWAY SIDE OF SWITCH

REVISION			
LET	DESCRIPTION	DATE	APPD

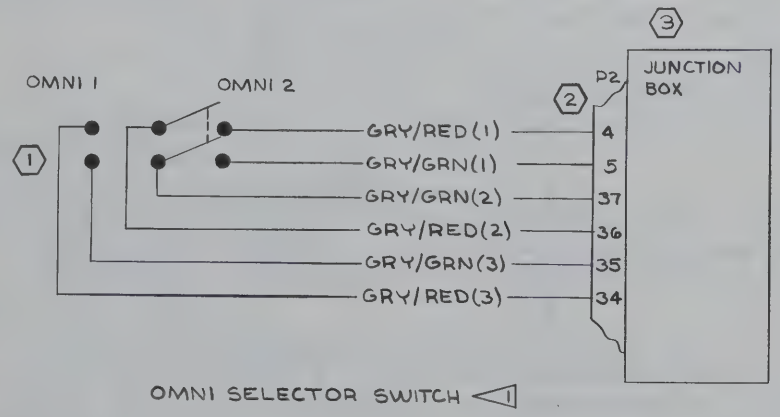

WIRE CODE NO.	GA	MATERIAL	LG	TERMINALS			SERIALS
GRY/RED(3)	22	-22-8-2		SOLDER	S-1837-1		
GRY/RED(2)	22	-22-8-2					
GRY/RED(1)	22	-22-8-2					
GRY/GRN(3)	22	-22-8-5					
GRY/GRN(2)	22	-22-8-5					
GRY/GRN(1)	22	-22-8-5		SOLDER	S-1837-1		

WIRE TABLE

ITEM NO.	PART NO.	DESCRIPTION
3	0570084-1	JUNCTION BOX ASSY
2	S-1838-1	CONNECTOR
1	S-1696-1	SWITCH

EQUIPMENT TABLE

CES-1000 IS APPLICABLE VENDOR CODES PER S-1400
CES-XXXX=CESSNA SPEC. NO.
S-XXX OR CMXXXX=CESSNA STD. NO.

SUPERSEDES: P 2.6.2

SUPERSEDED BY:

CONTRACT NO:

	NAME	DATE
DESIGN	SIPES V R	6/3/68
GROUP	W. Wisl	7-3-68
DRAWN	SCRAPER	6-25-68
CHECK	G IRVIN	6-28-68
STRESS	R.EGEIDE	7-1-68
PROJECT	[illegible]	7-8-68
APPD	SWANEY	6-28-68

Cessna AIRCRAFT CO.
COMMERCIAL AIRCRAFT DIV.
5800 E. PAWNEE
WICHITA, KANSAS

TITLE
WIRING DIAGRAM — OMNI AUDIO TRANSMITTER SWITCH

SIZE	CODE IDENT. NO.	DWG NO.
C	71379	0770750

SCALE: NONE | 182 | PAGE: 2.6.2.1

FORM NO. 80-218A

ED&RR 02384 (SR5852) II

REVISION			
LET	DESCRIPTION	DATE	APPD

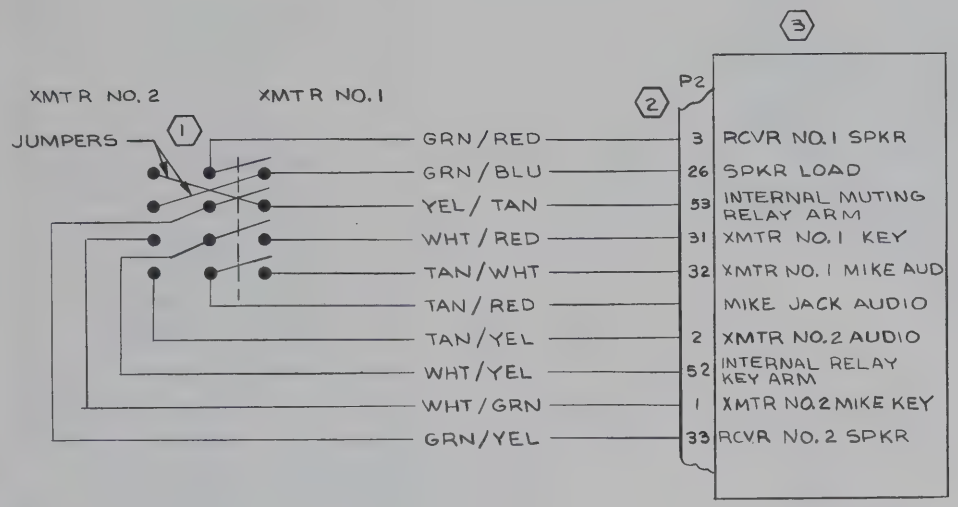

WIRE CODE NO.	GA	MATERIAL	LG	TERMINALS			SERIALS
YEL/TAN	20	20-4-10		SOLDER	S-1837-1		
WHT/YEL	22	22-9-4					
WHT/RED	22	22-9-2					
WHT/GRN	22	22-9-5					
TAN/YEL	22	22-10-4					
TAN/WHT	22	22-10-9					
TAN/RED	22	22-10-2					
GRN/YEL	20	20-5-4					
GRN/RED	20	20-5-2					
GRN/BLU	20	20-5-6		SOLDER	S-1837-1		

WIRE TABLE

NOTES:

1. TRANSMITTER NO. 1 IS ON KEYWAY SIDE OF SWITCH

ITEM NO.	PART NO.	DESCRIPTION
3	0570084-1	JUNCTION BOX ASSY
2	S-1831-1	CONNECTOR
1	S-1697-1	SWITCH

EQUIPMENT TABLE

CES-1000 IS APPLICABLE VENDOR CODES PER S-1400
CES-XXXX=CESSNA SPEC. NO.
S-XXX OR CMXXXX=CESSNA STD. NO.

SUPERSEDES: P2.6.3

SUPERSEDED BY:

CONTRACT NO:

	NAME	DATE
DESIGN	SIPES VR	6/3/68
GROUP	H. Wild	7-3-68
DRAWN	SCRAPER	6-25-68
CHECK	G. IRVIN	6-28-68
STRESS	R.F GEIDE	7-1-68
PROJECT	R Parker	7-2-68
APPD	SWANEY	6-28-68

Cessna AIRCRAFT CO.
COMMERCIAL AIRCRAFT DIV.
5800 E. PAWNEE
WICHITA, KANSAS

TITLE
WIRING DIAGRAM — TRANSMITTER SELECTOR SWITCH

SIZE	CODE IDENT. NO.	DWG NO.
C	71379	0770750

SCALE: NONE | 182 | PAGE: 2.6.3.1

FORM NO. 80-215A

ED&RR 02384 (SR5852) IX

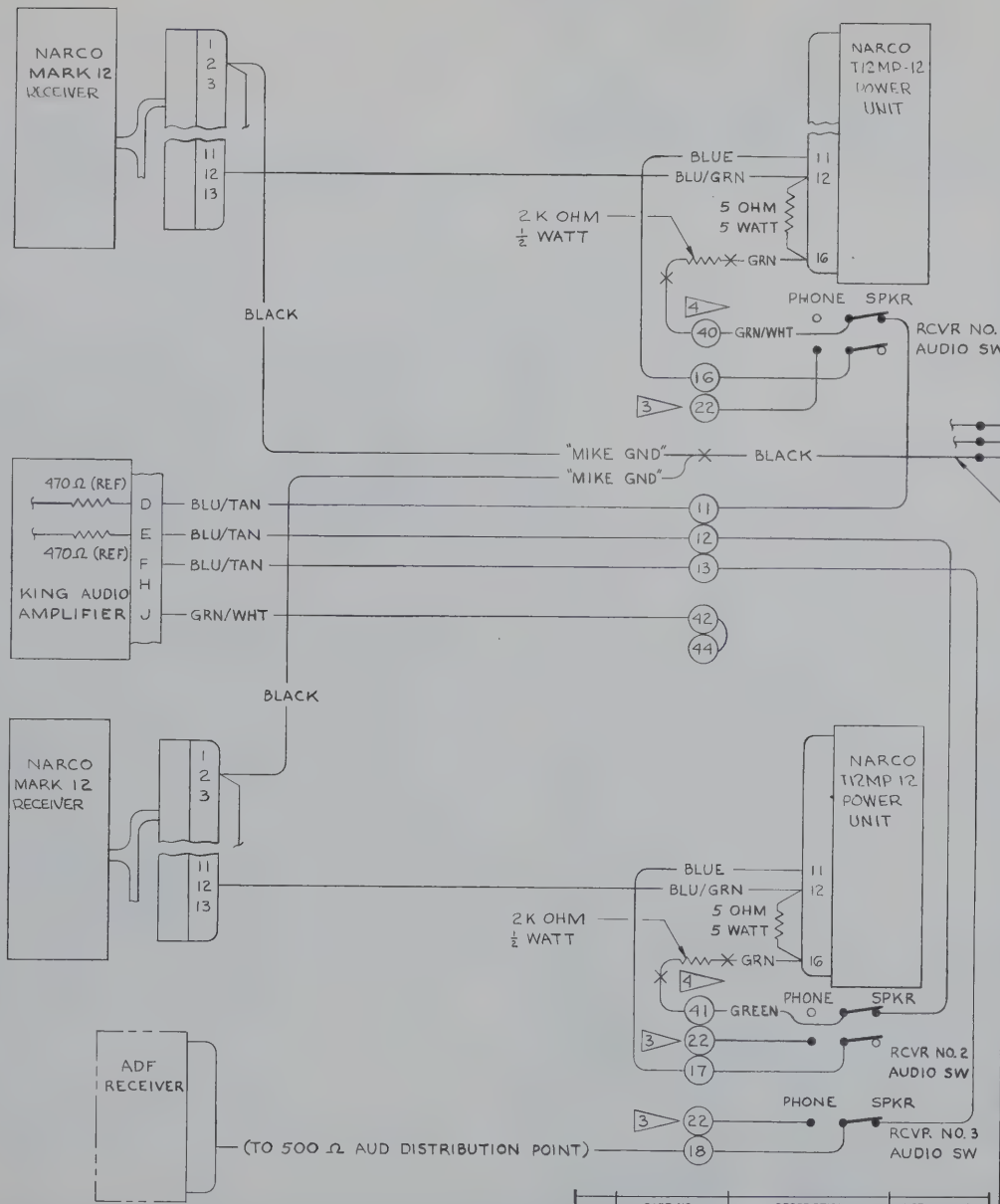

CHG LET	REVISION	BY DATE	CHK APPD

NOTES:

1. ◯ ARE NUMBERS ON TERMINAL BOARD.
2. ON SINGLE MARK 12 & ADF INSTL AUDIO SW NO. 3 WILL NOT BE USED.

3 ▷ PHONE TERMINAL MAY BE JUMPERED TO ADJACENT AUDIO SWITCH PHONE TERMINAL INSTEAD OF BEING ROUTED TO TERMINAL BOARD.

4 ▷ REMOVE EXISTING WIRES FROM (40) & (41) (GRN/RED & GRN/YEL RESPECTIVELY) & TERMINATE WITH S-1557-1 CAP.

5. THIS IS A REFERENCE PRINT ONLY.

INACTIVE 18257626

ITEM NO	PART NO.	DESCRIPTION	INSTALLED ON

EQUIPMENT TABLE

WIRE CODE NO.	GA	MATERIAL	LG	TERMINALS		SERIALS

WIRE TABLE

CESSNA AIRCRAFT CO., COMMERCIAL AIRCRAFT DIVISION, WICHITA, KANSAS

	NAME	DATE
DRAWN	G WOOD	1-26-65
GROUP		1-28-65
CHECK		1-27-65
PROJ		1-27-65

T-TLE: WIRING DIAGRAM— TYPICAL SWITCHING- NARCO MARK 12 & ADF

Cessna®

DWG NO: 0770750

SUPERSEDED BY:	SUPERSEDES:	MODEL: 182	REV: A	PAGE: 2.6.4

FORM NO. 80-161A

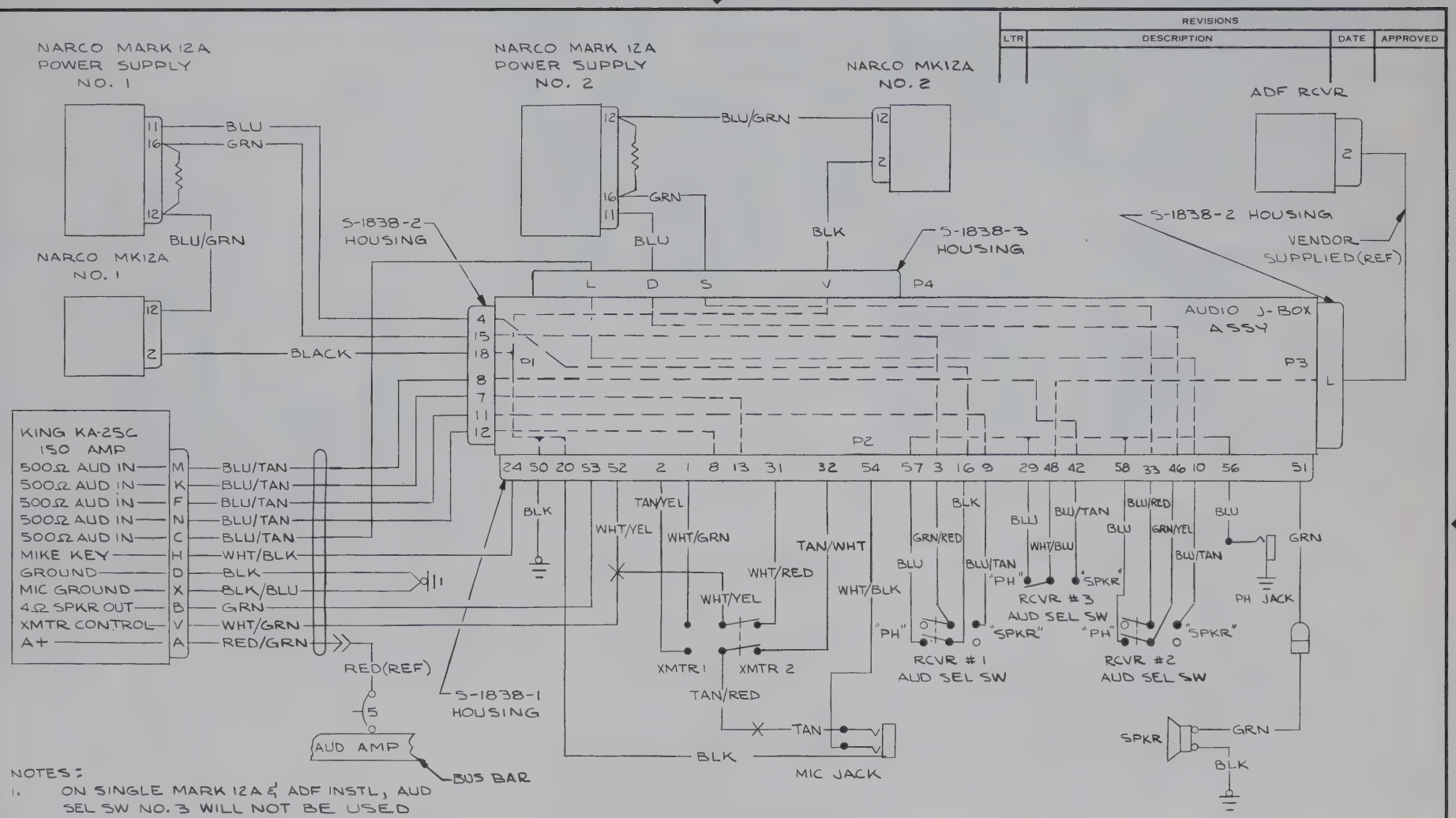

REVISIONS			
LTR	DESCRIPTION	DATE	APPROVED

NOTES:

1. ON SINGLE MARK 12A & ADF INSTL, AUD SEL SW NO. 3 WILL NOT BE USED
2. THIS PAGE IS A REFERENCE PRINT ONLY
3. REFER TO 0770750 PAGE 2.36.2 FOR KING KA-25C ISOLATION AMPLIFIER WIRING DIAGRAM

CONTRACT NO:		
	NAME	DATE
DESIGN	HENSHAW	12-3-68
GROUP	[illegible]	12-5-68
DRAWN	HENSHAW	12-3-68
CHECK	HARRIS	12-3-68
STRESS		
PROJECT	[illegible]	
APPD		

SUPERSEDES: P. 2.6.8

Cessna AIRCRAFT CO.
COMMERCIAL AIRCRAFT DIV.
5800 E. PAWNEE
WICHITA, KANSAS

TITLE: WIRING DIAGRAM — TYPICAL SWITCHING, NARCO MARK 12A & ADF

SIZE	CODE IDENT. NO.	DWG NO.
C	71379	0770750

SCALE: NONE | 182 | PAGE: 2.6.8.1

FORM NO. 80-216

SER 182599306

REVISION			
LET	DESCRIPTION	DATE	APPD

NOTES:

1. ON SINGLE CESSNA COMM INSTL, RED/BLK WIRE (PIN K) IS CONNECTED TO RED/WHT WIRE (PIN S) WITH AN S-1370-1 SPLICE, & BLUE WIRE (PIN C) IS CONNECTED TO BLUE/TAN WIRE (PIN R) WITH S-1370-1 SPLICE. WHEN 300 COMM IS INSTL WITH OTHER RADIOS, RED/WHT WIRE CONNECTS TO CKT BKR AS SHOWN. RED/BLK WIRE IS TERMINATED WITH S-1557-1 CAP.
2. BLACK 16 GA. WIRE IS HALVED, 1/2 SOLDERS TO (PIN A), 1/2 SOLDERS TO GND LUG

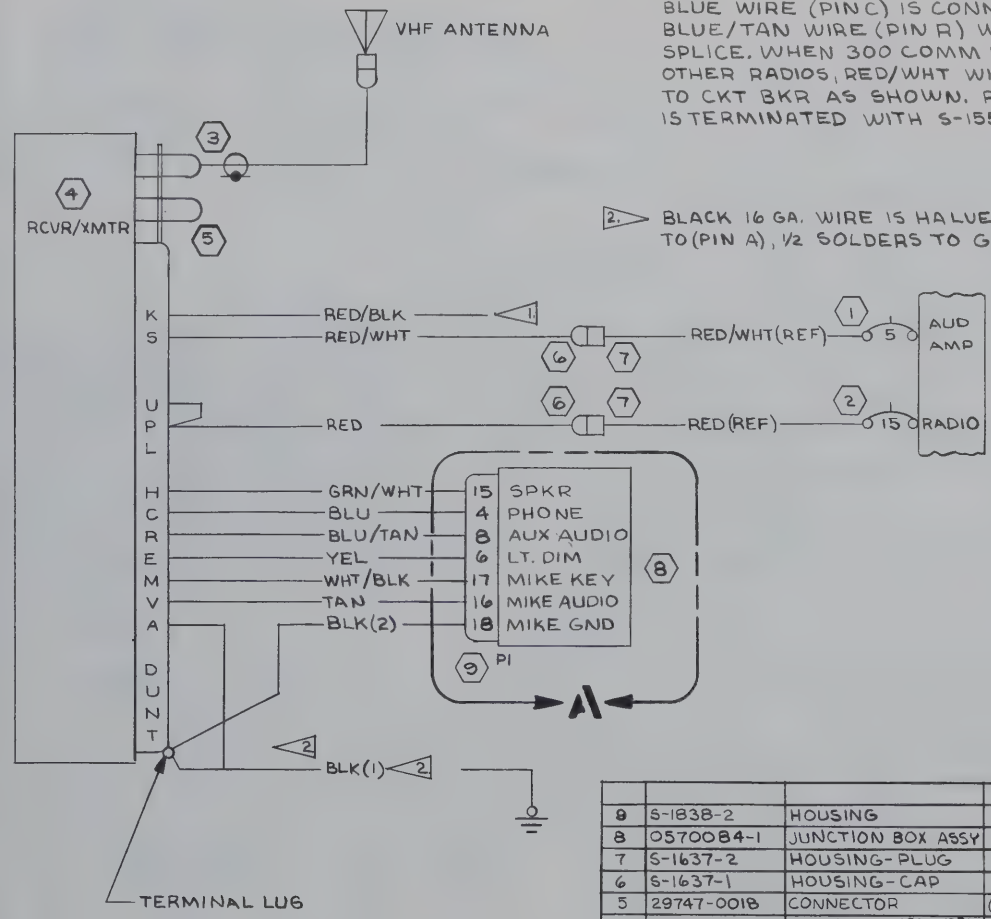

YEL	18	-18-4		SOLDER	S-1837-1		
WHT/BLK	22	-22-9-0		SOLDER	S-1837-1		
TAN	22	-22-10		SOLDER	S-1837-1		
RED/WHT	18	-18-2-9		SOLDER	S-1635-1		
RED/BLK	18	-18-2-0		SOLDER	1.		
RED	16	-16-2			S-1635-1		
GRN/WHT	20	-20-5-9			S-1837-1		
BLU/TAN	22	-22-6-10			S-1837-1		
BLU	22	-22-6			S-1837-1		
BLK(2)	22	-22-0			S-1837-1		
BLK(1)	16	-16-0		SOLDER	S-1367-2-8		
WIRE CODE NO.	GA	MATERIAL	LG	TERMINALS			SERIALS

WIRE TABLE

8	S-1838-2	HOUSING	
8	0570084-1	JUNCTION BOX ASSY	
7	S-1637-2	HOUSING-PLUG	
6	S-1637-1	HOUSING-CAP	
5	29747-0018	CONNECTOR	(00781)
4	31390-1514	RCVR/XMTR (ARC TYPE 524A)	(00781)
3	29753	CONNECTOR	(00781)
2	S-1360-15	CIRCUIT BKR	
1	S-1360-5	CIRCUIT BKR	
ITEM NO.	PART NO.	DESCRIPTION	VENDOR

EQUIPMENT TABLE

CES-1000 IS APPLICABLE VENDOR CODES PER S-1400
CES-XXXX=CESSNA SPEC. NO.
S-XXX OR CMXXXX=CESSNA STD. NO.

SUPERSEDES: P 2.7.2

SUPERSEDED BY:

CONTRACT NO:

	NAME	DATE
DESIGN	SIPESVR	6/7/68
GROUP	R. Wind	8-19-68
DRAWN	SCRAPER	7-30-68
CHECK	HARRIS	8-1-68
STRESS	ASHER	8-6-68
PROJECT	[illegible]	8-21-68
APPD	MDS	8-1-68

Cessna AIRCRAFT CO.
COMMERCIAL AIRCRAFT DIV.
5800 E. PAWNEE
WICHITA, KANSAS

TITLE
WIRING DIAGRAM—
CESSNA COMM 300
(ARC TYPE 524A)

SIZE	CODE IDENT. NO.	DWG NO.
C	71379	0770750

SCALE: NONE | 182 | PAGE: 2.7.3

FORM NO. 90-219A

ED-AR02391 (SR5852) IX

(SR4451)

CHG LET	REVISION	BY DATE	CHK APPD
A	ADDED: 263 CHOKE IN A+LINE, 33827, & NOTE 2. 32880-1000 WAS 32881-1000	SKH 9-10-65	
B	BY REV: ADD DETAIL A, S-1636-1, S-1635-1, S-1637-1, S-1637-2, S-1838-3, & 0570084-1; 35700-1000 R-521B WAS 28340-1500 R-521A-15; 32880-0100 WAS 32880-1000 L-521B-10; 35700-1100 R-521B WAS 28340-1400 R-521A-14; XR6637 WAS R-12½-75-RS34 ED&RR02391 (SR5852) II	LES 7-30-68	

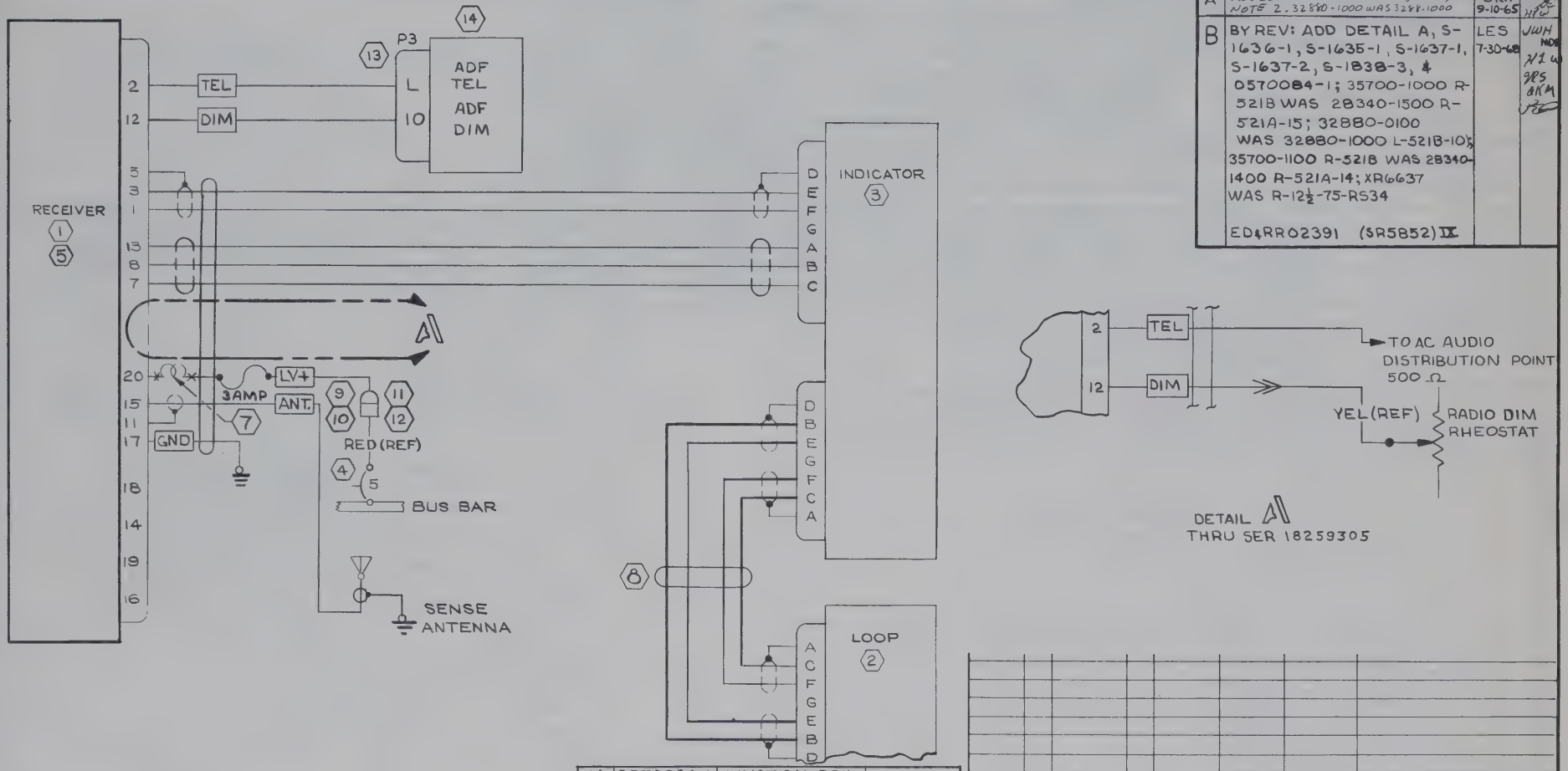

DETAIL A1
THRU SER 18259305

NOTES:

1. CONNECTIONS SHOWN ARE FOR TOP MOUNTED SENSE & BOTTOM MOUNTED LOOP ANTENNA.
2. ALL WIRES ARE VENDOR FURNISHED WITH RCVR, EXCEPT CHOKE IN CIRCUIT BETWEEN PIN 20 & THE FUSEHOLDER WHICH MUST BE ADDED ON INSTL IN ACFT.

ITEM NO	PART NO.	DESCRIPTION	INSTALLED ON
14	0570084-1	JUNCTION BOX	
13	S-1838-3	HOUSING	
12	S-1637-2	HOUSING-PLUG	
11	S-1637-1	HOUSING-CAP	
10	S-1635-1	PIN	
9	S-1636-1	SOCKET	
8	33827	LOOP CABLE (ARC)	(00779)
7	A-263	CHOKE	(23939)
6	XR6637	RHEOSTAT	(83777)
5	35700-1100	RCVR (WITH BFO)	(ARC R-521B)
4	S-1360-5	CIRCUIT BREAKER	
3	32680-0000	INDICATOR (ARC)	(ARC IN-521B)
2	32880-0100	LOOP (ARC)	(00779)
1	35700-1000	RCVR (WITHOUT BFO)	(ARC R-521B)

EQUIPMENT TABLE

WIRE CODE NO	GA	MATERIAL	LG	TERMINALS		SERIALS

WIRE TABLE

CESSNA AIRCRAFT CO., COMMERCIAL AIRCRAFT DIVISION, WICHITA, KANSAS

	NAME	DATE
DRAWN	BREEN	8-5-64
GROUP	[illegible]	9-1-64
CHECK	[illegible]	8-25-64
PROJ	[illegible]	8-24-64

TITLE: WIRING DIAGRAM — CESSNA ADF 300 (ARC TYPE 521B)

Cessna.

DWG NO 0770750

SUPERSEDED BY	SUPERSEDES	PAGE	MODEL	REV	PAGE
	0770610	175	182	B	2.12

FORM NO. 80-161

REVISION			
LET	DESCRIPTION	DATE	APPD
C	BY REV: REVISED & REDRAWN; DELETE NOTE 1; C582602-0201 WAS C582602-0101; KA-32 WAS KA-15; -286 WAS 030-24-00; -2001 WAS 030-0021-01; -235 WAS 024-0001-00, ADD NOTE 2 & S-1880-4 WAS XR6637 ED; RR 10381	FER 2-18-69	JWH MDS JDH

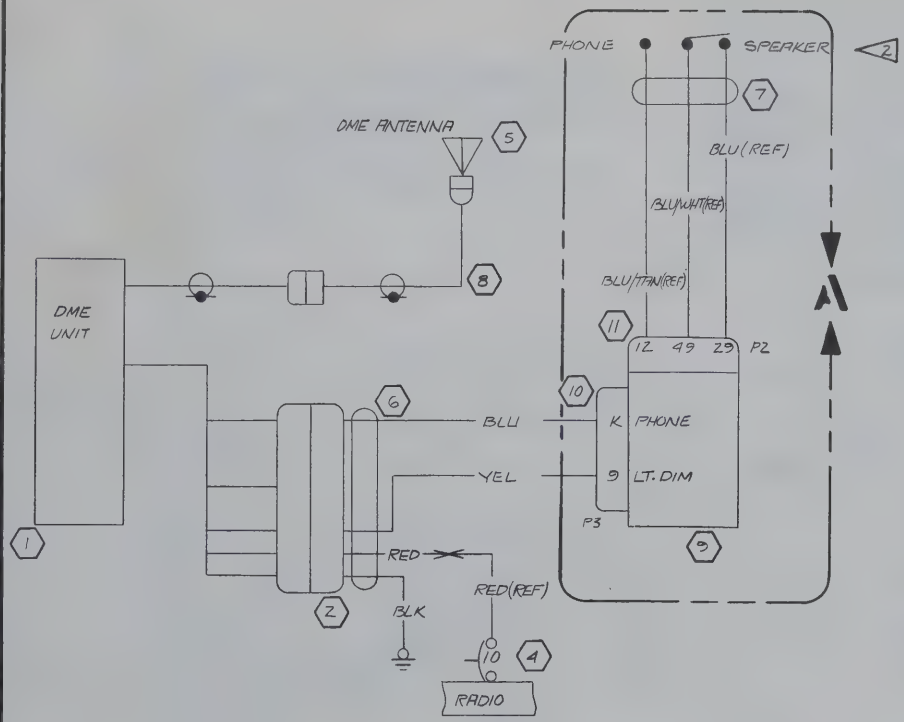

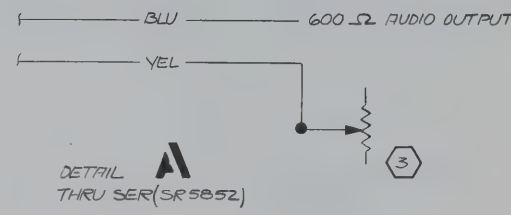

NOTES:

1. ITEMS 6, 7 & 8 ARE SUPPLIED AS PART OF KING INSTL KIT NO. 056-4052-00.
2. SPEAKER FUNCTION ON KEYWAY SIDE OF SWITCH

ITEM NO.	PART NO.	DESCRIPTION	PAGE
	EQUIPMENT TABLE		
11	S-1838-1	HOUSING	
10	S-1838-3	HOUSING	2.20.2
9	0570084-1	JUNCTION BOX	7.15
8	-235	CABLE ASSY	2.22
7	-286	CABLE ASSY	2.6.0.1
6	-2001	CABLE ASSY	2.20.2
5	KA-32	ANTENNA	6.10
4	S-1360-10	CIRCUIT BKR	3.12
3	S-1880-4	RHEOSTAT	7.2
2	030-2043-00	CONNECTOR	2.20.3
1	C582602-0201	DME UNIT	3.12

CES-1000 IS APPLICABLE VENDOR CODES PER S-1400
CES-XXXX=CESSNA SPEC. NO.
S-XXX OR CMXXXX=CESSNA STD. NO.

SUPERSEDES: 2.20.1

SUPERSEDED BY:

WIRE CODE NO.	GA	MATERIAL	LG	TERMINALS		SERIALS
RED	16	-16-2		SOLDER	S-1370-2	
YEL	18	-18-4		SOLDER	S-1837-1	SER(SR5852) & ON
BLU	22	-22-6			S-1837-1	SER(SR5852) & ON
BLU	22	-22-6			S-1370-2	THRU SER(SR5852)
RED	16	-16-2			S-1370-2	
YEL	18	-18-4			S-1370-1	THRU SER(SR5852)
BLACK	16	-16-0		SOLDER	S-1367-2-8	

WIRE TABLE

CONTRACT NO:

	* NAME	DATE
DESIGN		
GROUP	G. ENGEL	11-24-69
DRAWN	BREEN	5-30-69
CHECK	R. STUCK	11-20-69
STRESS		
PROJECT	H. WISE	11-2-69
APPD	JWW	

Cessna AIRCRAFT CO.
COMMERCIAL AIRCRAFT DIV.
5800 E. PAWNEE
WICHITA, KANSAS

TITLE
WIRING DIAGRAM — CESSNA DME 300

SIZE	CODE IDENT. NO.	DWG NO.
C	71379	0770750

SCALE: NONE | 182 | PAGE: 2.20.1

FORM NO. 60-215A

REVISION			
LET	DESCRIPTION	DATE	APPD

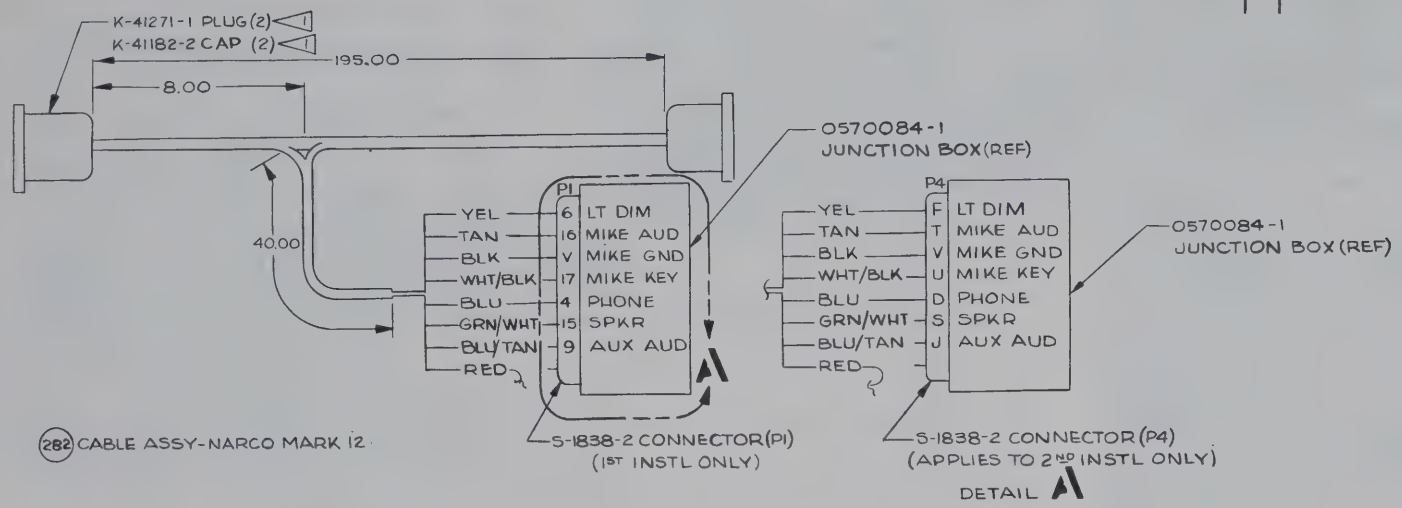

(282) CABLE ASSY-NARCO MARK 12

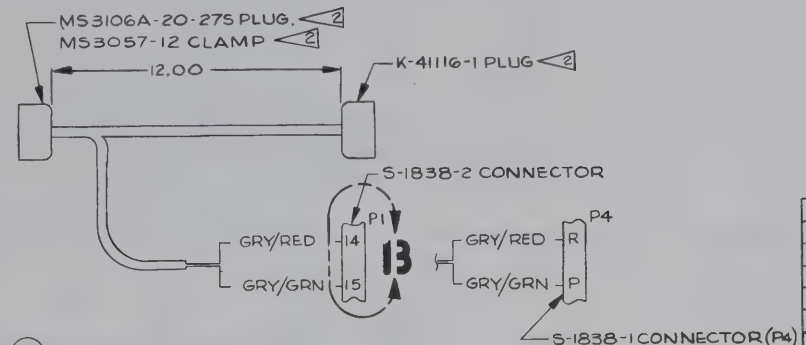

(283) CABLE ASSY-INDICATOR NARCO 12A

NOTES:
1. PLUGS & CAPS ARE PART OF NORCO CONN KIT EL-2052 FOR MK12 OR EL-3077-502 FOR MK12A (NOT SUPPLIED WITH MK12A INSTL KIT)
2. K-41116-1 PLUG (93493) SUPPLIED WITH MK12A MS3106A-20-27S PLUG & MS3057-12 CLAMP ARE SUPPLIED WITH VOA-8 OR VOA-9 INDICATOR

NO. REQD/NEXT ASSY		EFFECTIVE SERIALS	PAGE	PART NUMBER	DESCRIPTION
AR	AR		2.25.3		WIRING
1	1			S-1838-2	CONNECTOR
	2			K-41271-1	PLUG
	2			K-41182-2	CAP
1				K-41116-1	PLUG
1				MS3057-12	CLAMP
1				MS3106A-20-27S	PLUG
				-283	CABLE ASSY
				-282	CABLE ASSY
283	282				

LIST OF MATERIAL

DO NOT SCALE PRINT
BREAK ALL SHARP EDGES
A/R = AS REQD
CES-XXXX=CESSNA SPEC. NO.
S-XXX OR CMXXXX=CESSNA STD. NO.
$=APPROX EQUAL SPACES
CES-1000 IS APPLICABLE
VENDOR CODES PER S-1400

UNLESS OTHERWISE SPECIFIED
DIMENSIONS ARE IN INCHES
TOLERANCES ARE
DECIMALS: .00 ±.03, .000 ±.010 | ANGLES: MACH ±0.30', FORMED ±2°
FOR HOLES, CSNKS, ETC., SEE CES 1012
FOR BASIC CODES SEE NAS 523
BJ-MS20470AD | BB-MS20426AD

SUPERSEDES: PG 2.25.0
SUPERSEDED BY:

CONTRACT NO:

	NAME	DATE
DESIGN	SPES VR	6/10/68
GROUP	Hardin	7-14-68
DRAWN	SCRAPER	7-30-68
CHECK	HARRIS	8-1-68
STRESS	ASHER	8-6-68
PROJECT		8-16-68
APPD	MDS	8-1-68

Cessna AIRCRAFT CO.
COMMERCIAL AIRCRAFT DIV.
5800 E. PAWNEE
WICHITA, KANSAS

TITLE: CABLE ASSEMBLY-NARCO MARK 12A

SIZE: C | CODE IDENT. NO.: 71379 | 0770750
SCALE: NONE | 182 | PAGE: 2.25.2

FORM NO. 80-221

REVISION			
LET	DESCRIPTION	DATE	APPD

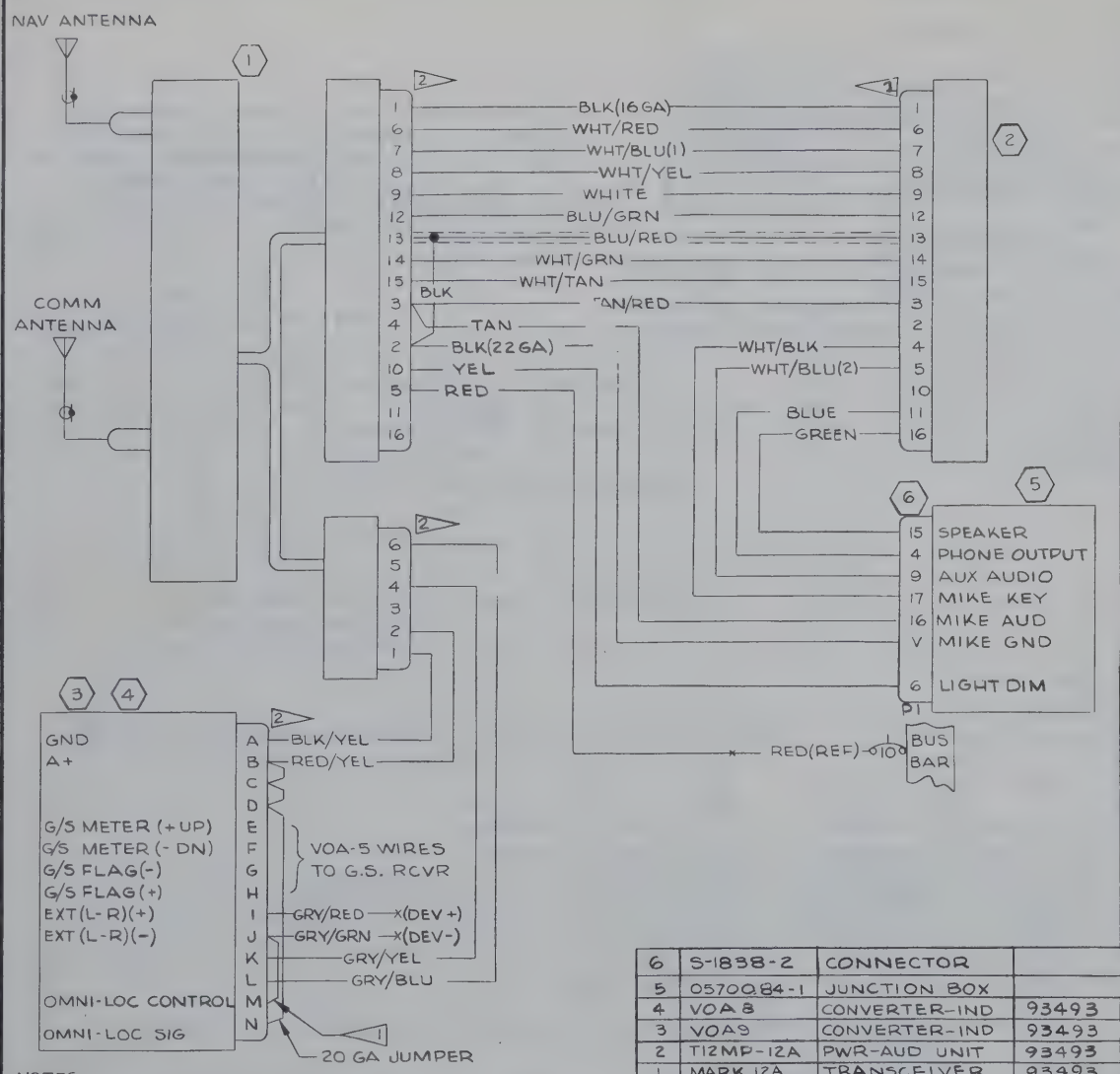

NOTES:

1. THIS JUMPER USED ONLY WHEN DUAL INSTALLATIONS ARE REQUIRED WITH CESSNA NAV-O-MATIC SYSTEMS
2. NARCO PLUGS SUPPLIED WITH NARCO INSTL KIT & INDICATOR

ITEM NO.	PART NO.	DESCRIPTION	VENDOR
6	S-1838-2	CONNECTOR	
5	0570084-1	JUNCTION BOX	
4	VOA 8	CONVERTER-IND	93493
3	VOA9	CONVERTER-IND	93493
2	T12MP-12A	PWR-AUD UNIT	93493
1	MARK 12A	TRANSCEIVER	93493

EQUIPMENT TABLE

CES-1000 IS APPLICABLE
VENDOR CODES PER S-1400
CES-XXXX=CESSNA SPEC. NO.
S-XXX OR CMXXXX=CESSNA STD. NO.

SUPERSEDES: PG. 225.1

SUPERSEDED BY:

WIRE CODE NO.	GA	MATERIAL	LG	TERMINALS		SERIALS
GREEN	20	-20-5		S-1837-1	SOLDER	
GRY/BLU	22	-22-8-6		SOLDER		
GRY/YEL		-22-8-4		SOLDER		
GRY/GRN		-22-8-5		S-1557-1		
GRY/RED		-22-8-2		S-1557-1		
RED/YEL		-22-2-4		SOLDER		
BLK/YEL		-22-0-4		SOLDER		
BLACK		-22-0		S-1837-1		
TAN		-22-10		S-1837-1		
WHT/TAN		-22-9-10		SOLDER		
WHT/GRN	22	-22-9-5		SOLDER		
BLU/RED	22S	-22-6-2		SOLDER		
BLU/GRN	22	-22-6-5		SOLDER		
BLUE		-22-6		S-1837-1		
WHT/YEL		-22-9-4		SOLDER		
WHT/BLU(2)		-22-9-6		S 1837-1		
WHT/RED		-22-9-2		SOLDER		
WHT/BLU(1)		-22-6-9		S-1557-1		
WHT/BLK		-22-9-0		S 1837-1		
TAN/RED	22	-22-10-2		SOLDER		
YELLOW	18	-18-4		S-1837-1		
RED	16	-16-2		S-1370-2		
BLACK	16	-16-0		SOLDER		
WHITE	14	-14-9		SOLDER	SOLDER	

WIRE TABLE

CONTRACT NO:

	NAME	DATE
DESIGN	SIPES VR	6/10/68
GROUP	Hardin	8/14/68
DRAWN	SCRAPER	7-30-68
CHECK	HARRIS	8-1-68
STRESS	MSH:12	8-6-68
PROJECT	[illegible]	[illegible]
APPD	MDS	8-1-68

Cessna AIRCRAFT CO.
COMMERCIAL AIRCRAFT DIV.
5800 E. PAWNEE
WICHITA, KANSAS

TITLE: WIRING DIAGRAM — NARCO MARK 12A WITH VOA 8 & VOA9

SIZE: C | CODE IDENT. NO.: 71379 | DWG NO.: 0770750

SCALE: NONE | 182 | PAGE: 225.3

FORM NO 60 215A

(SR 5852)IX ED&RR 02394

REVISION			
LET	DESCRIPTION	DATE	APPD

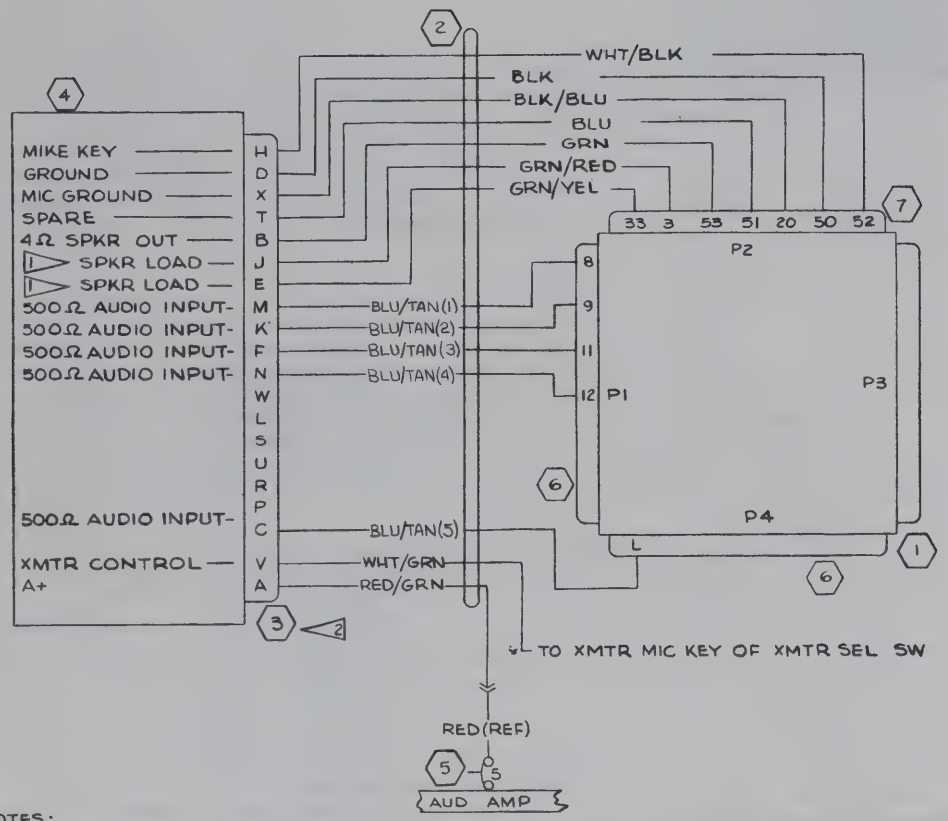

NOTES:

1. THESE CIRCUITS PROVIDE A 4Ω, 5 WATT SPEAKER LOAD WHEN REQ'D BY THE RADIO INSTL.
2. CONNECTOR IS FURNISHED WITH KA-25C.
3. TERMINAL BLOCK NO.S TO BE STAMPED ON WIRES PER CES 1015.

WIRE CODE NO.	GA	MATERIAL	LG	TERMINALS			SERIALS
WHT/GRN	22	-22-9-5		S-1567-1-8	SOLDER		
WHT/BLK	22	-22-9-0		S-1837-1			
RED/GRN	20	-20-2-5		S-341-2			
GRN/YEL	20	-20-5-4		S-1837-1			
GRN/RED	20	-20-5-2					
GRN	20	-20-5					
BLU/TAN(5)	22	-22-6-10					
BLU/TAN(4)	22	-22-6-10					
BLU/TAN(3)	22	-22-6-10					
BLU/TAN(2)	22	-22-6-10					
BLU/TAN(1)	22	-22-6-10					
BLU	22	-22-6					
BLK/BLU	22	-22-0-6					
BLK	18	-18-0		S-1837-1	SOLDER		

WIRE TABLE

ITEM NO.	PART NO.	DESCRIPTION	VENDOR
7	S-1838-1	HOUSING	
6	S-1838-2	HOUSING	
5	S-1360-5	CIRCUIT BREAKER	
4	KA-25C	AUDIO AMPLIFIER	(22373)
3	030-2002-00	PLUG	(22373)
2	-288	CABLE ASSY	
1	0570084-1	JUNCTION BOX	

EQUIPMENT TABLE

CES-1000 IS APPLICABLE VENDOR CODES PER S-1400
CES-XXXX=CESSNA SPEC. NO.
S-XXX OR CMXXXX=CESSNA STD. NO.

SUPERSEDES: PG. 2.36.1

SUPERSEDED BY:

CONTRACT NO:

	NAME	DATE
DESIGN	SIPESYR	6/10/68
GROUP	Jardin	7-10-68
DRAWN	SCRAPER	7-30-68
CHECK	HARRIS	8-5-68
STRESS	ASHER	8-6-68
PROJECT	Bailey	8-15-68
APPD	MDS	8-5-68

Cessna AIRCRAFT CO.
COMMERCIAL AIRCRAFT DIV.
5800 E. PAWNEE
WICHITA, KANSAS

TITLE
WIRING DIAGRAM —
KING KA-25C AUDIO AMPLIFIER

SIZE	CODE IDENT. NO.	DWG NO.
C	71379	0770750

SCALE: NONE | 182 | PAGE: 2.36.2

FORM NO. 60-215A

ED&RR 02394 (SR 5852) IX

NOTES:

1. WIRE MATERIAL PER S-1460

CHG LET	REVISION	BY / DATE	CHK / APPD
A	BY REV: IN TITLE & ON FIELD "VOA-9 WAS VOA-5" ED&RR 00944 (SR 5595)	MRL 11-21-67	MDS

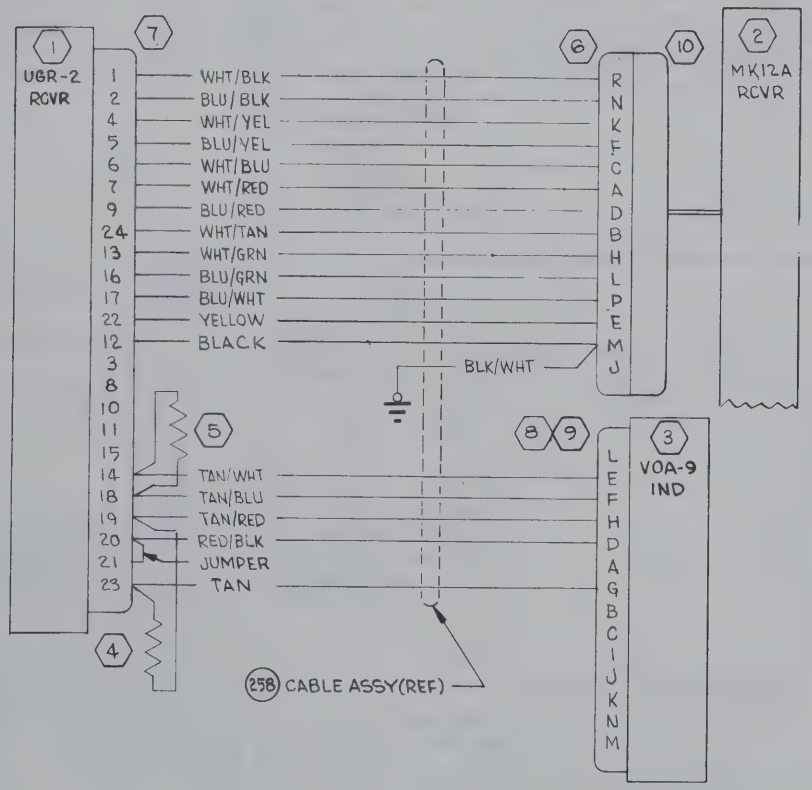

ITEM NO	PART NO.	DESCRIPTION	INSTALLED ON
10	MRA-14S	PIG TAIL(93493)	
9	41228-6	CLAMP (93493)	
8	41223-2	PLUG (93493)	
7	41291-101	CONNECTOR(93493)	
6	41247-102	CONNECTOR(93493)	
5	470Ω, 1/4 WATT	RESISTOR(93493)	
4	1000Ω, 1/4 WATT	RESISTOR(93493)	
3	VOA-9	INDICATOR(93493)	
2	MARK 12A	XCVR (93493)	
1	UGR-2	RCVR (93493)	

EQUIPMENT TABLE

WIRE CODE NO.	GA	MATERIAL	LG	TERMINALS			SERIALS
BLK/WHT	18	-18-0-9		SOLDER	S-1367-1-6		
BLACK	18	-18-0			SOLDER		
YELLOW	18	-18-4					
RED/BLK	18	-18-2-0					
TAN/RED	22	-22-10-2					
TAN/BLU	22	-22-10-6					
TAN/WHT	22	-22-10-9					
BLU/WHT	22	-22-6-9					
BLU/GRN	22	-22-6-5					
BLU/RED	22	-22-6-2					
BLU/YEL	22	-22-6-4					
BLU/BLK	22	-22-6-0					
WHT/TAN	22	-22-9-10					
WHT/GRN	22	-22-9-5					
WHT/RED	22	-22-9-2					
WHT/BLU	22	-22-9 6					
WHT/YEL	22	-22-9-4					
WHT/BLK	22	-22-9-0					
TAN		-22-10		SOLDER	SOLDER		

WIRE TABLE

CESSNA AIRCRAFT CO. COMMERCIAL AIRCRAFT DIVISION, WICHITA, KANSAS

	NAME	DATE
DRAWN	W COOK	11-20-67
GROUP	H. Wise	11-27-67
CHECK	SWANEY	11-20-67
PROJ	[illegible]	11-27-67

TITLE: WIRING DIAGRAM — NARCO UGR-2 GLIDESLOPE WITH NARCO MARK 12A & VOA-9

Cessna.

DWG NO: 0770750

SUPERSEDED BY | SUPERSEDES 0770750, P 226.1 | MODEL: 182 | REV: A | PAGE: 2.37.1

FORM NO. 80-161

CHG LET	REVISION	BY / DATE	CHK / APPD
A	BY REV: R-543B WAS R-543A & TITLE WAS CESSNA GLIDESLOPE (ARC TYPE R-543A); 36440-0000 WAS 34340 (ED&RR 00952) (SR5632)	RLY 12-7-67	MDS

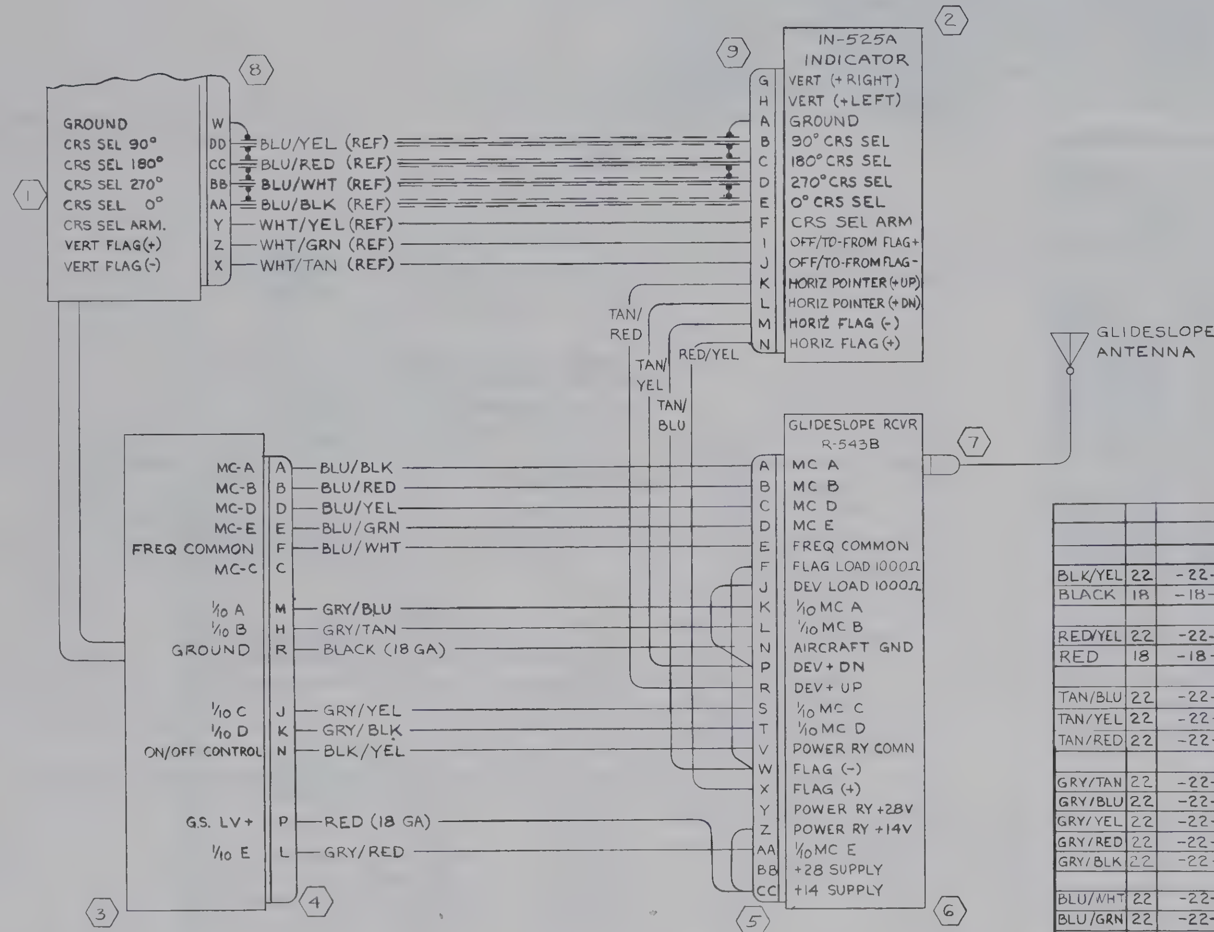

WIRE CODE NO.	GA	MATERIAL	LG	TERMINALS		SERIALS
BLK/YEL	22	-22-0-4		SOLDER	SOLDER	
BLACK	18	-18-0		SOLDER	SOLDER	
RED/YEL	22	-22-2-4		SOLDER	SOLDER	
RED	18	-18-2				
TAN/BLU	22	-22-10-6				
TAN/YEL	22	-22-10-4				
TAN/RED	22	-22-10-2				
GRY/TAN	22	-22-8-10				
GRY/BLU	22	-22-8-6				
GRY/YEL	22	-22-8-4				
GRY/RED	22	-22-8-2				
GRY/BLK	22	-22-8-0				
BLU/WHT	22	-22-6-9				
BLU/GRN	22	-22-6-5				
BLU/YEL	22	-22-6-4				
BLU/RED	22	-22-6-2				
BLU/BLK	22	-22-6-0		SOLDER	SOLDER	

WIRE TABLE

ITEM NO	PART NO	DESCRIPTION	INSTALLED ON
9	27826	CONNECTOR	
8	29/47-0026	CONNECTOR	
7	11337	CONNECTOR	
6	36440-0000	GLIDESLOPE RCVR	(ARC TYPE R-543B)
5	36194	CONNECTOR KIT	
4	36195	CONNECTOR KIT	
3	36300	CABLE HARNESS KIT	
2	32350	INDICATOR (ARC TYPE IN-525A)	
1	36150-1114	RCVR/XMTR (ARC TYPE RT515R-1)	

EQUIPMENT TABLE

CESSNA AIRCRAFT CO., COMMERCIAL AIRCRAFT DIVISION, WICHITA, KANSAS

	NAME	DATE
DRAWN	G WOOD	11-10-66
GROUP	H. Wiese	1-31-67
CHECK	YOKSHIN	2-1-67
PROJ	[illegible]	3-67

TITLE: WIRING DIAGRAM— CESSNA 400 GLIDESLOPE (ARC TYPE R-543B)

Cessna®

DWG NO: 0770750

SUPERSEDED BY: | SUPERSEDES: | MODEL: 182 | REV. A | PAGE: 2.38.1

A FORM NO 80 161A

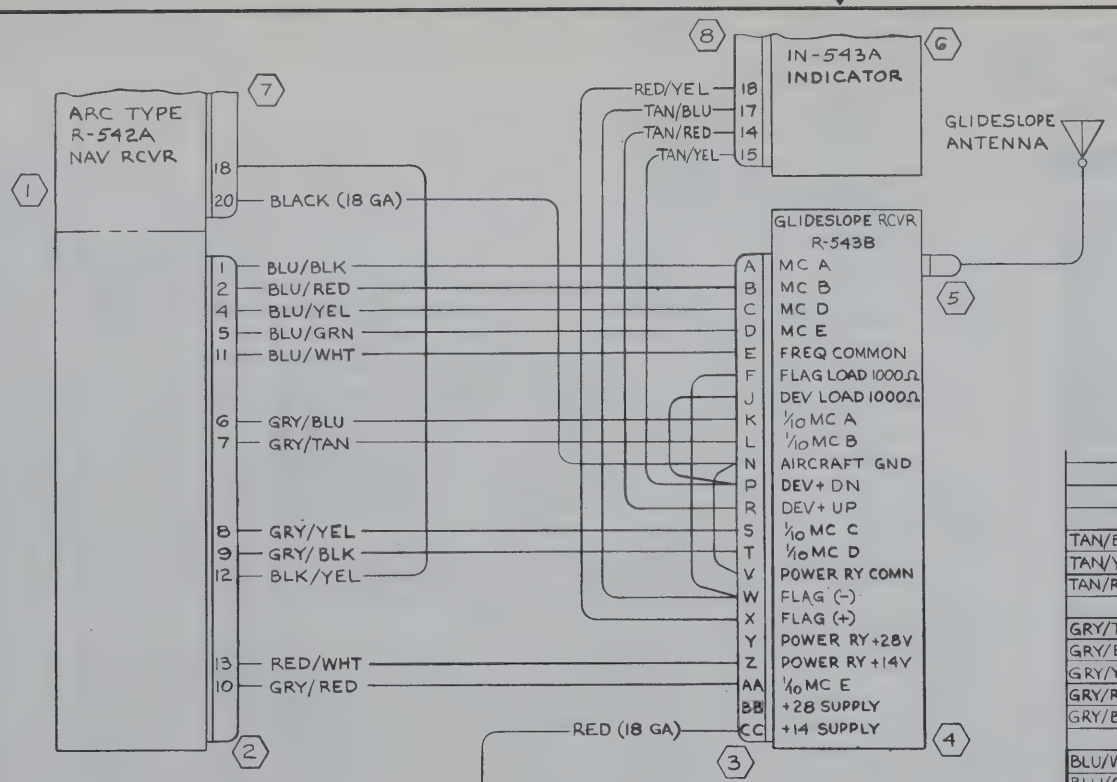

REVISIONS			
LTR	DESCRIPTION	DATE	APPROVED
A	BY REV: R-543B WAS R-543A & TITLE WAS "CESSNA GLIDESLOPE" (ARC TYPE R-543A); 36440-0000 WAS 34340 (ED & RR 00952) (SR5632)	RLY 12-7-67	MDS N/A N/W PROD

WIRE CODE NO.	GA	MATERIAL	LG	TERMINALS		SERIALS
TAN/BLU	22	-22-10-6		SOLDER	SOLDER	
TAN/YEL	22	-22-10-9		SOLDER	SOLDER	
TAN/RED	22	-22-10-2		SOLDER	SOLDER	
GRY/TAN	22	-22-8-10		SOLDER	SOLDER	
GRY/BLU	22	-22-8-6		↓	↓	
GRY/YEL	22	-22-8-4		↓	↓	
GRY/RED	22	-22-8-2		↓	↓	
GRY/BLK	22	-22-8-0		SOLDER	SOLDER	
BLU/WHT	22	-22-6-9		SOLDER	SOLDER	
BLU/GRN	22	-22-6-5		↓	↓	
BLU/YEL	22	-22-6-4		↓	↓	
BLU/RED	22	-22-6-2		↓	↓	
BLU/BLK	22	-22-6-0		↓	↓	
RED/YEL	22	-22-2-4		↓	↓	
RED/WHT		-22-2-9		SOLDER	↓	
RED	18	-18-2		S-13671-8	SOLDER	
BLK/YEL	22	-22-0-4		SOLDER	SOLDER	
BLACK	18	-18-0		SOLDER	SOLDER	

WIRE TABLE

ITEM NO.	PART NO.	DESCRIPTION
8	34294-0425	CONNECTOR
7	35693-0004	CONNECTOR
6	34290	IN-543 INDICATOR(00781)
5	11337	CONNECTOR
4	36440-0000	GLIDESLOPE RCVR
3	36194	CONNECTOR KIT(00781)
2	35548-0225	CONNECTOR(00781)
1	33560	NAV RCVR (00781)

EQUIPMENT TABLE

CONTRACT NO:

	NAME	DATE
DESIGN	G WOOD	1-9-67
GROUP	N. Wise	1-31-67
DRAWN	G WOOD	1-9-67
CHECK	YAKSHAW	2-1-67
STRESS	R.P. Worthington	2-1-67
PROJECT	NMI	2-3-67
APPD		

Cessna AIRCRAFT CO.
COMMERCIAL AIRCRAFT DIV.
5800 E. PAWNEE
WICHITA, KANSAS

TITLE
WIRING DIAGRAM —
CESSNA 400
GLIDESLOPE
(ARC TYPE R-543B)

SIZE	CODE IDENT. NO.	DWG NO.
C	71379	0770750

SCALE: NONE

PAGE: 2.39.1 A

FORM NO. 80-215

CHG LET	REVISION	BY / DATE	CHK / APPD
A	BY REV: ADD S-1837-1 TO FIELD ED & RR 02394 (SK5852) IX	LES 8-1-68	JWH MDS ALA WHH VAS

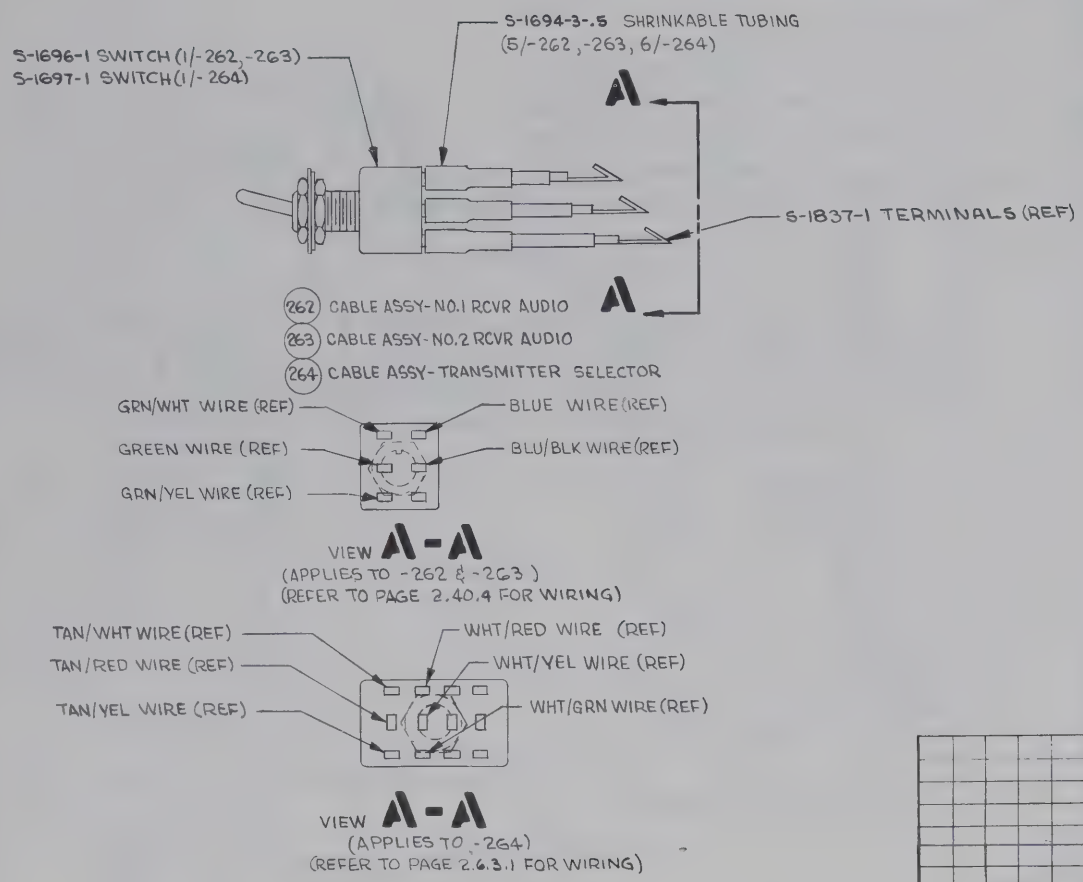

					A/R				2.6.3.1		WIRING
						A/R	A/R		2.40.4		WIRING
					6	5	5			S-1694-3-.5	SHRINKABLE TUBING
					1					S-1697-1	SWITCH
						1	1			S-1696-1	SWITCH
								SER 18257626 & ON		-264	ASSY-XMTR SEL
								SER 18257626 & ON		-263	ASSY-AUD SEL #2
								SER 18257626 & ON		-262	ASSY-AUD SEL #1
					264	263	262	EFFECTIVE SERIALS	PAGE NO.	PART NUMBER	DESCRIPTION
NO REQD/NEXT ASSY									LIST OF MATERIALS		

UNLESS OTHERWISE SPECIFIED
DIMENSIONS ARE IN INCHES
TOLERENCES ARE

DECIMALS	ANGLES	
.00 ± .03	MACH	FORMED
.000 ± .010	± 0.30	± 2°

DO NOT SCALE PRINT

CES 1000 IS APPLICABLE

CESSNA AIRCRAFT CO., COMMERCIAL AIRCRAFT DIVISION, WICHITA, KANSAS

	NAME	DATE
DRAWN	W COOK	11-22-67
GROUP	H. Wise	12-5-67
CHECK	SWANEY	11-22-67
STRESS	ASHER	12-5-67
PROJ	[illegible]	12-6-67

TITLE: CABLE ASSEMBLY – AUDIO & TRANSMITTER SELECTOR SWITCHES

Cessna.

DWG NO 0770750

SUPERSEDED BY | SUPERSEDES | SCALE 2:1 | REV | PAGE 2.40.0

FORM NO. 80-186

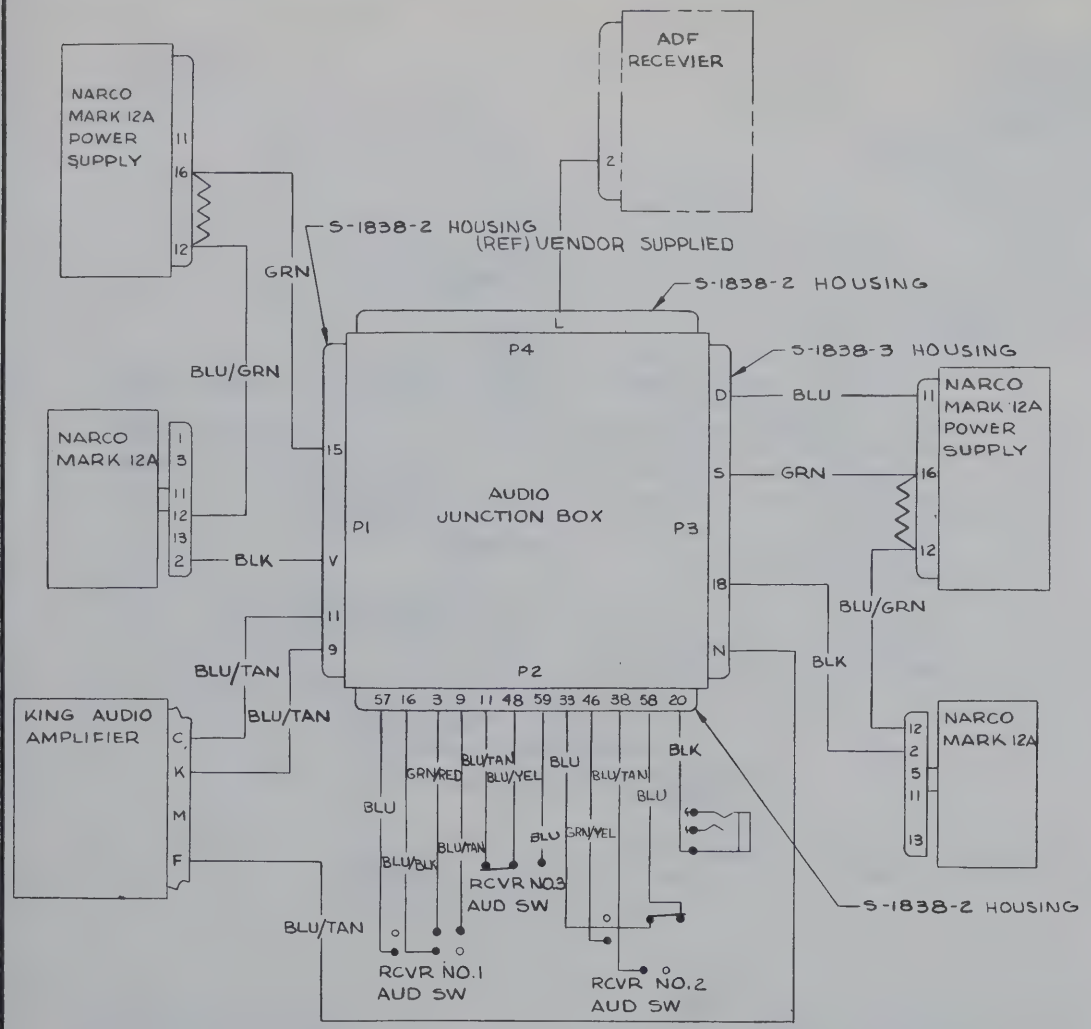

NOTES
1. ON SINGLE MARK 12 & ADF INSTL, AUDIO SW NO. 3 WILL NOT BE USED
2. THIS IS A REFERANCE PRINT ONLY.

REVISION			
LET	DESCRIPTION	DATE	APPD

WIRE CODE NO.	GA	MATERIAL	LG	TERMINALS		SERIALS

WIRE TABLE

EQUIPMENT TABLE			
ITEM NO.	PART NO.	DESCRIPTION	

CES-1000 IS APPLICABLE
VENDOR CODES PER S-1400
CES-XXXX=CESSNA SPEC. NO.
S-XXX OR CMXXXX=CESSNA
STD. NO.

SUPERSEDES: P. 2.40.1 & 2.40.2

SUPERSEDED BY:

CONTRACT NO:

	NAME	DATE
DESIGN	SIPES VR	6/10/68
GROUP	Hardin	7-11-68
DRAWN	SCRAPER	7-30-68
CHECK	HARRIS	8-1-68
STRESS	ASHER	8-6-68
PROJECT		
APPD	MDS	8-16-68

Cessna AIRCRAFT CO.
COMMERCIAL AIRCRAFT DIV.
5800 E. PAWNEE
WICHITA, KANSAS

TITLE
WIRING DIAGRAM —
TYPICAL SWITCHING, NARCO
MARK 12A & ADF

SIZE	CODE IDENT. NO.	DWG NO.
C	71379	0770750

SCALE: NONE | 182 | PAGE: 2.40.3

FORM NO 80-218A

ED & RR 02394 (SR 5852) IX

REVISION			
LET	DESCRIPTION	DATE	APPD

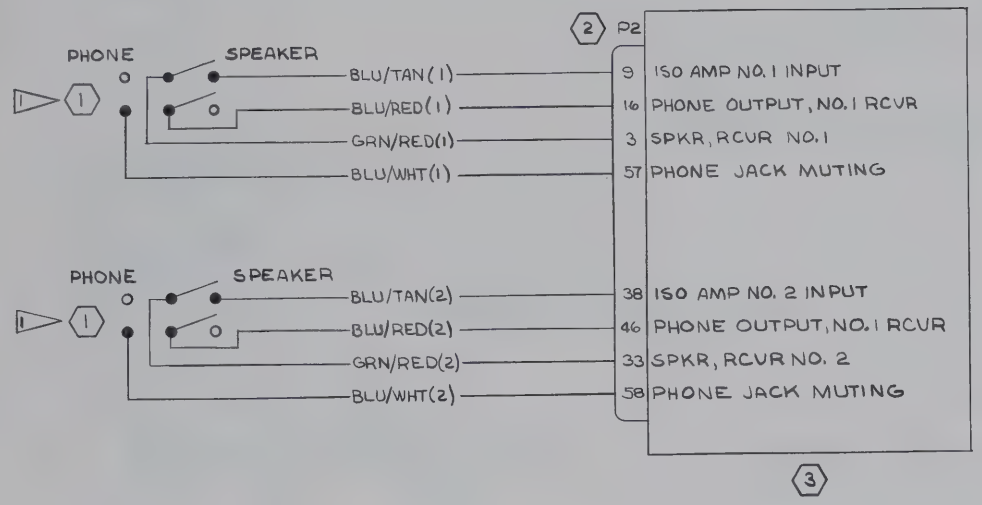

NOTES:

1. SPKR FUNCTION ON KEY WAY SIDE OF SWITCH

WIRE CODE NO.	GA	MATERIAL	LG	TERMINALS			SERIALS
BLU/WHT(2)	22	-22-6-9		SOLDER	S-1837-1		
BLU/WHT(1)		-22-6-9					
GRN/RED(2)		-22-5-2					
GRN/RED(1)		-22-5-2					
BLU/RED(2)		-22-6-2					
BLU/RED(1)		-22-6-2					
BLU/TAN(2)		-22-6-10					
BLU/TAN(1)	22	-22-6-10		SOLDER	S-1837-1		

WIRE TABLE

ITEM NO.	PART NO.	DESCRIPTION
3	0570084-1	JUNCTION BOX
2	S-1838-1	HOUSING
1	S-1686-1	SWITCH

EQUIPMENT TABLE

CES-1000 IS APPLICABLE VENDOR CODES PER S-1400
CES-XXXX=CESSNA SPEC. NO.
S-XXX OR CMXXXX=CESSNA STD. NO.

SUPERSEDES: P. 2.40.1

SUPERSEDED BY:

CONTRACT NO:

	NAME	DATE
DESIGN	SIPES VR	6/10/68
GROUP	[illegible]	6/14/68
DRAWN	SCRAPER	7-30-68
CHECK	HARRIS	8-5-68
STRESS	ASHER	8-6-68
PROJECT	[illegible]	8/6/68
APPD	MDS	8-5-68

Cessna AIRCRAFT CO.
COMMERCIAL AIRCRAFT DIV.
5800 E. PAWNEE
WICHITA, KANSAS

TITLE
WIRING DIAGRAM — AUDIO SWITCHING — NARCO MARK 12A

SIZE C | CODE IDENT. NO. 71379 | DWG NO. 0770750

SCALE: NONE | 182 | PAGE: 2.40.4

FORM NO. 80-215A

ED#RR02391 (SR5852) IX

REVISION			
LET	DESCRIPTION	DATE	APPD
A	REFER TO P 2.41.3.0		

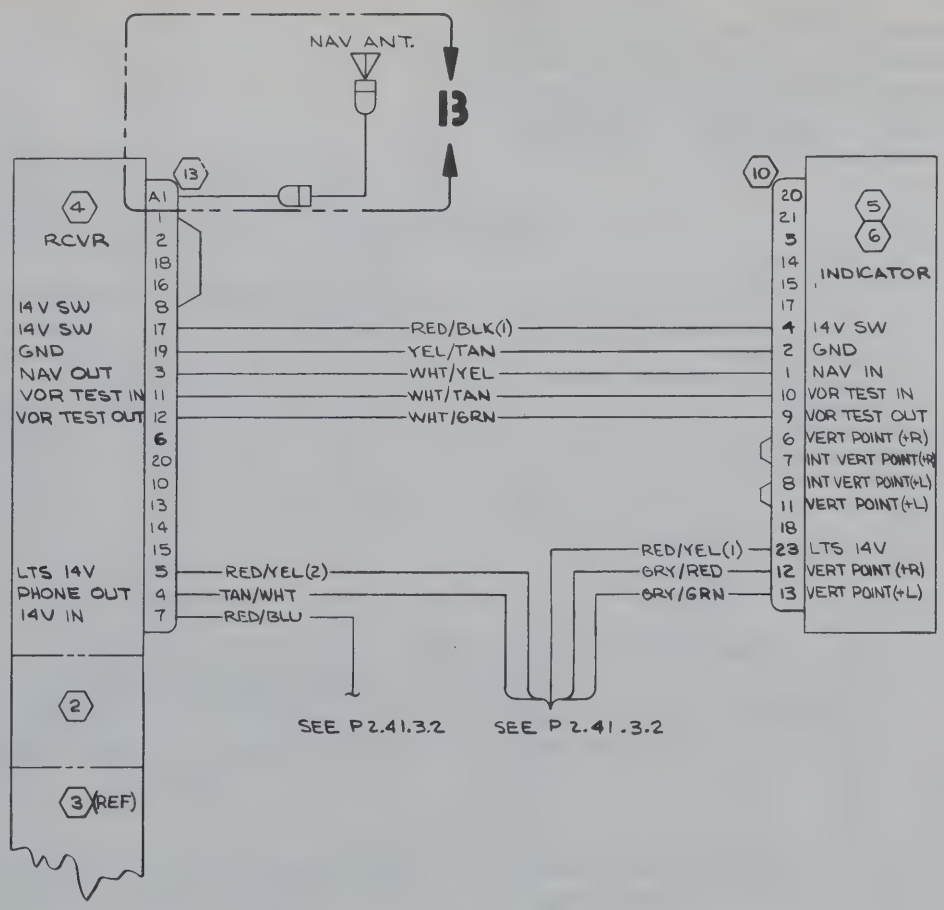

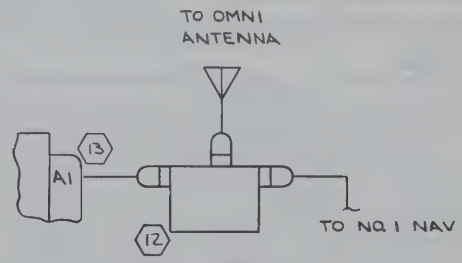

DETAIL 13
2ND INSTL

WIRE CODE NO.	GA	MATERIAL	LG	TERMINALS		SERIALS

WIRE TABLE

ITEM NO.	PART NO.	DESCRIPTION

EQUIPMENT TABLE

CES-1000 IS APPLICABLE VENDOR CODES PER S-1400
CES-XXXX=CESSNA SPEC. NO.
S-XXX OR CMXXXX=CESSNA STD. NO.

SUPERSEDES: PG 2.41.2.1

SUPERSEDED BY:

CONTRACT NO:

	NAME	DATE
DESIGN	SIPES VR	6/10/68
GROUP		6-14-68
DRAWN	SCRAPER	7-30-68
CHECK	HARRIS	8-1-68
STRESS	ASHER	8-6-68
PROJECT		8-16-68
APPD	MDS	8-1-68

Cessna AIRCRAFT CO.
COMMERCIAL AIRCRAFT DIV.
5800 E. PAWNEE
WICHITA, KANSAS

TITLE
WIRING DIAGRAM —
CESSNA 400 NAV/COM
(ARC TYPE RT-522A & RT-532A)

SIZE	CODE IDENT. NO.	DWG NO.
C	71379	07 70750

SCALE: NONE | 182 | PAGE: 2.41.3.1

FORM NO. 80-215A

ED&RR 02394 (SR5852) II

REVISION			
LET	DESCRIPTION	DATE	APPD
A	REFER TO P 2.41.3.0		

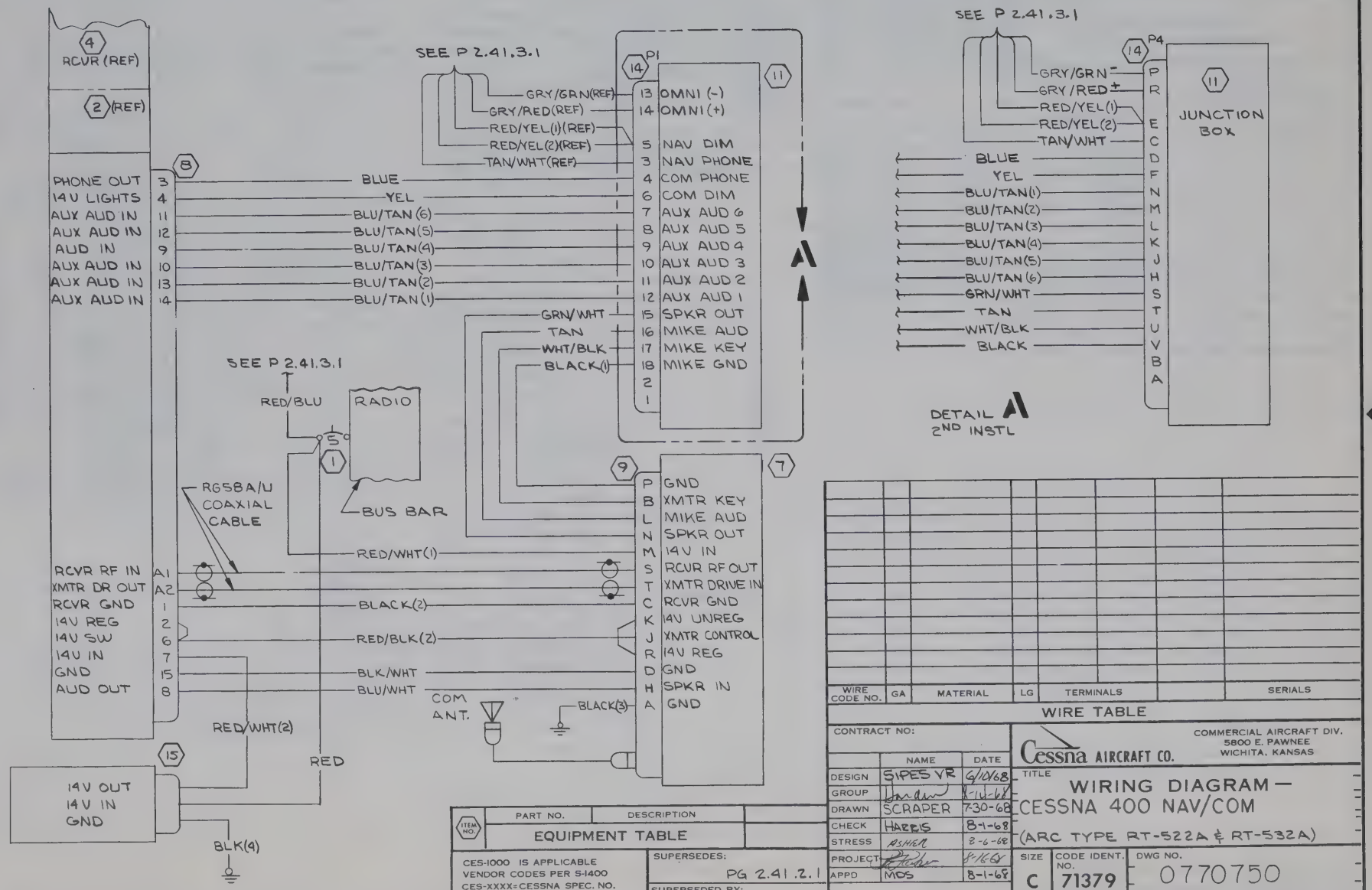

WIRE CODE NO.	GA	MATERIAL	LG	TERMINALS		SERIALS

WIRE TABLE

ITEM NO.	PART NO.	DESCRIPTION

EQUIPMENT TABLE

CES-1000 IS APPLICABLE
VENDOR CODES PER S-1400
CES-XXXX=CESSNA SPEC. NO.
S-XXX OR CMXXXX=CESSNA
STD. NO.

SUPERSEDES: PG 2.41.2.1

SUPERSEDED BY:

CONTRACT NO:

	NAME	DATE
DESIGN	SIPES VR	6/10/68
GROUP		7-11-68
DRAWN	SCRAPER	7-30-68
CHECK	HARRIS	8-1-68
STRESS	ASHER	8-6-68
PROJECT		8/16/68
APPD	MDS	8-1-68

Cessna AIRCRAFT CO.
COMMERCIAL AIRCRAFT DIV.
5800 E. PAWNEE
WICHITA, KANSAS

TITLE
WIRING DIAGRAM —
CESSNA 400 NAV/COM
(ARC TYPE RT-522A & RT-532A)

SIZE	CODE IDENT. NO.	DWG NO.
C	71379	0770750

SCALE: NONE | 182 | PAGE: 2.41.3.2

FORM NO. MD-215A

ED&RR02394 (SR5852) IX

REVISION			
LET	DESCRIPTION	DATE	APPD

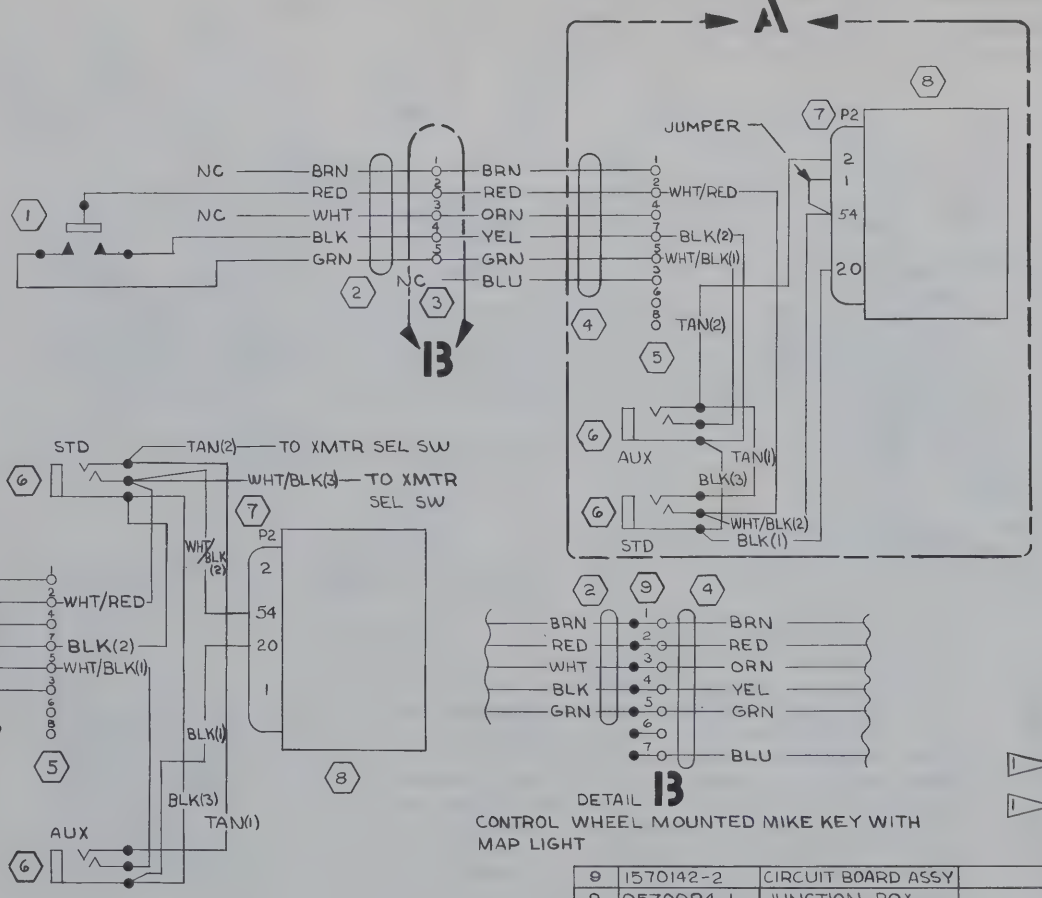

DETAIL **B**
CONTROL WHEEL MOUNTED MIKE KEY WITH MAP LIGHT

DETAIL **A**
2nd INSTALLATION

NOTES:

1. ON SECOND INSTALLATION WHT/BLK(3) & TAN(2) WIRES SOLDER TO XMTR SELECTOR SWITCH & PIN 54 TO 1 JUMPER IS OMITTED.
2. 5-171 TERM BLOCK IS REPLACED BY 1570142-2 CIRCUIT BOARD ASSY WHEN A MAP LIGHT IS INSTALLED

ITEM NO.	PART NO.	DESCRIPTION	VENDOR
9	1570142-2	CIRCUIT BOARD ASSY	
8	0570084-1	JUNCTION BOX	
7	S-1838-1	CONNECTOR	
6	S-1102-1	JACK	
5	8-171	TERM BLOCK	71785
4	SF-1030-8X	CABLE	08261
3	5-171	TERM BLOCK	71785
2	8445	CABLE	70903
1	A8002	SWITCH	HETH

EQUIPMENT TABLE

CES-1000 IS APPLICABLE VENDOR CODES PER S-1400
CES-XXXX=CESSNA SPEC. NO.
S-XXX OR CMXXXX=CESSNA STD. NO.

SUPERSEDES: P2.44.0
SUPERSEDED BY:

	WIRE CODE NO.	GA	MATERIAL	LG	TERMINALS		SERIALS
	WHT/BLK(3)	22	-22-9-0		SOLDER	SOLDER	
	WHT/RED	22	-22-9-2		SOLDER	S-1367-1-8	
1	WHT/BLK(2)	22	-22-9-0			S-1837-1	
	WHT/BLK(1)	22	-22-9-0			S-1367-1-8	
1	TAN(2)	22	-22-10			S-1837-1	
	TAN(1)	22	-22-10			SOLDER	
	BLK(3)	22	-22-0			SOLDER	
	BLK(2)	22	-22-0			S-1367-1-8	
	BLK(1)	22	-22-0		SOLDER	S-1837-1	

WIRE TABLE

CONTRACT NO:

	NAME	DATE
DESIGN	SPES VR	6/10/68
GROUP		8-14-68
DRAWN	SCRAPER	7-31-68
CHECK	HARRIS	8-1-68
STRESS	ASAKR	8-6-68
PROJECT		8-16-68
APPD	MDS	8-1-68

Cessna AIRCRAFT CO.
COMMERCIAL AIRCRAFT DIV.
5800 E. PAWNEE
WICHITA, KANSAS

TITLE
WIRING DIAGRAM — MIKE KEY-CONTROL WHEEL

SIZE	CODE IDENT. NO.	DWG NO.
C	71379	0770750

SCALE: NONE | 182 | PAGE: 2.44.1

FORM NO. 80-215A

ED#RR02394 (SR5852)II

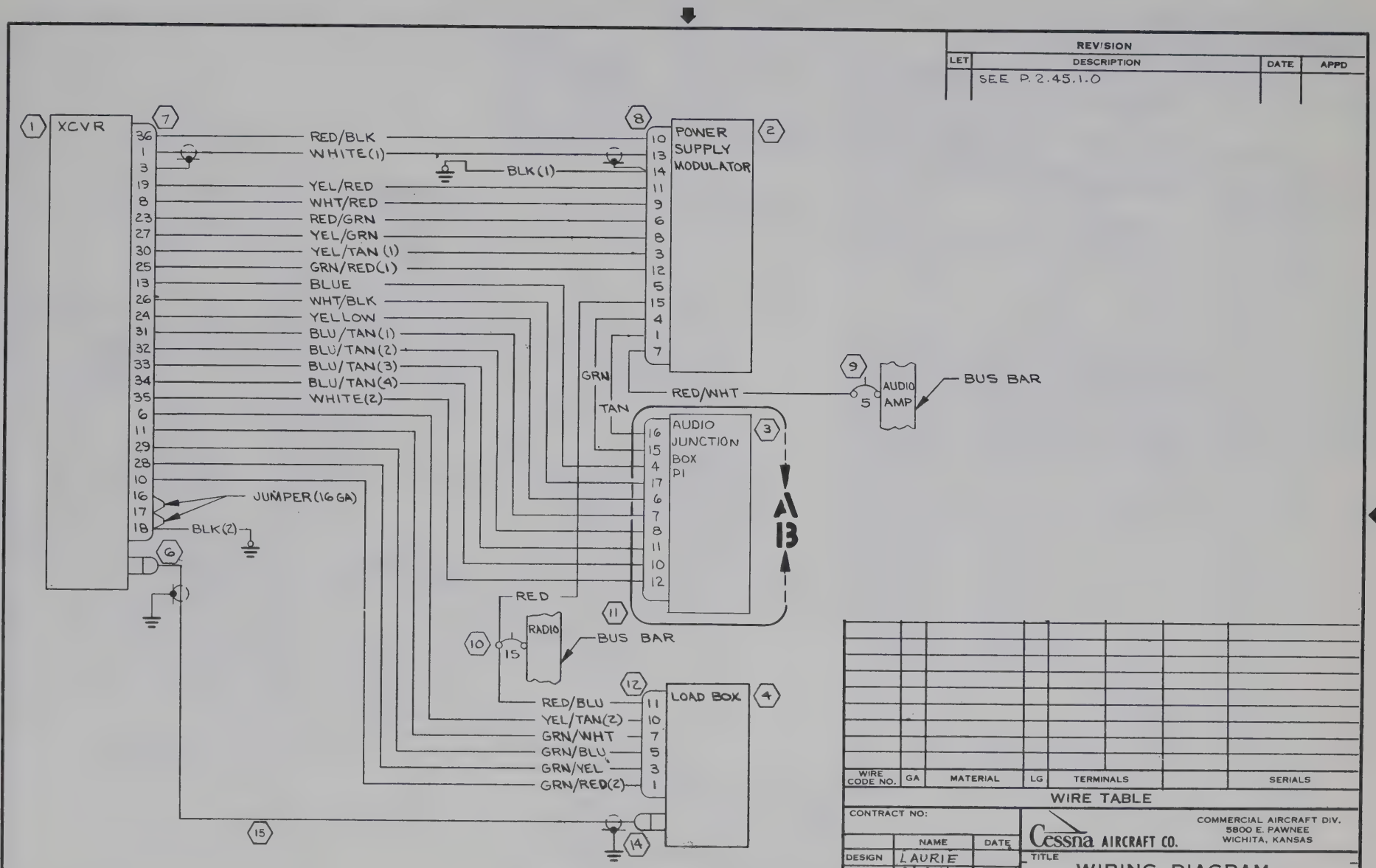

ED&RR 01978 & 01979

REVISION			
LET	DESCRIPTION	DATE	APPD

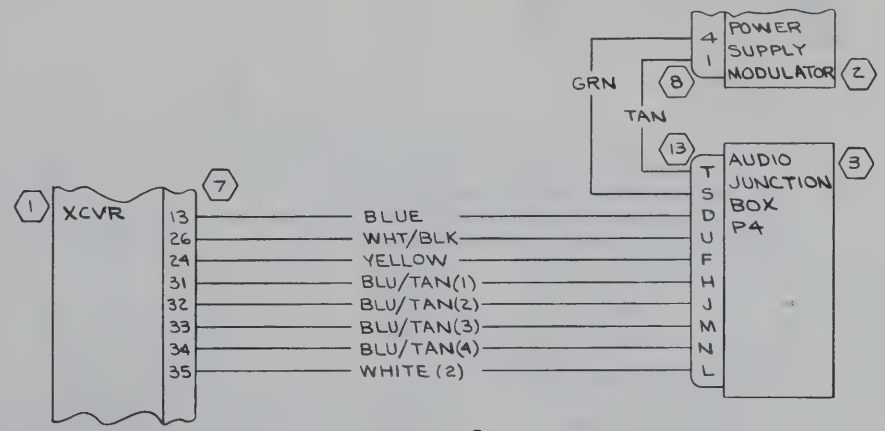

DETAIL A
2ND INSTL

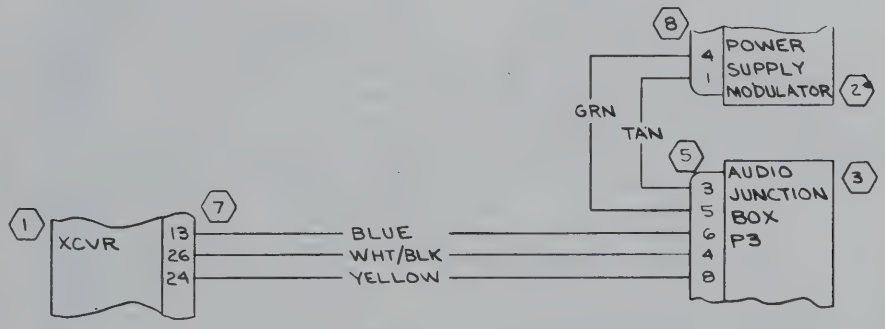

DETAIL B
3RD INSTL
(BLU/TAN WIRES TO BE CAPPED ON 3RD INSTL)

WIRE CODE NO.	GA	MATERIAL	LG	TERMINALS		SERIALS

WIRE TABLE

ITEM NO.	PART NO.	DESCRIPTION

EQUIPMENT TABLE

CES-1000 IS APPLICABLE VENDOR CODES PER S-1400
CES-XXXX=CESSNA SPEC. NO.
S-XXX OR CMXXXX=CESSNA STD. NO.

SUPERSEDES: P 2.45.1.2

SUPERSEDED BY:

CONTRACT NO:

	NAME	DATE
DESIGN	SIPES VR	6/3/68
GROUP	R. Wise	7-3-68
DRAWN	SCRAPER	6-25-68
CHECK	G. IRVIN	6-28-68
STRESS	R.F. GEIDE	7-1-68
PROJECT	[illegible]	28-68
APPD	SWANEY	6-28-68

Cessna AIRCRAFT CO.
COMMERCIAL AIRCRAFT DIV.
5800 E. PAWNEE
WICHITA, KANSAS

TITLE
WIRING DIAGRAM —
CESSNA 300 HF
(TYPE PT10-A)

SIZE	CODE IDENT. NO.	DWG NO.
C	71379	0770750

SCALE: NONE | 182 | PAGE: 2.45.1.3

EDCRR 02384 (SR5852) IX

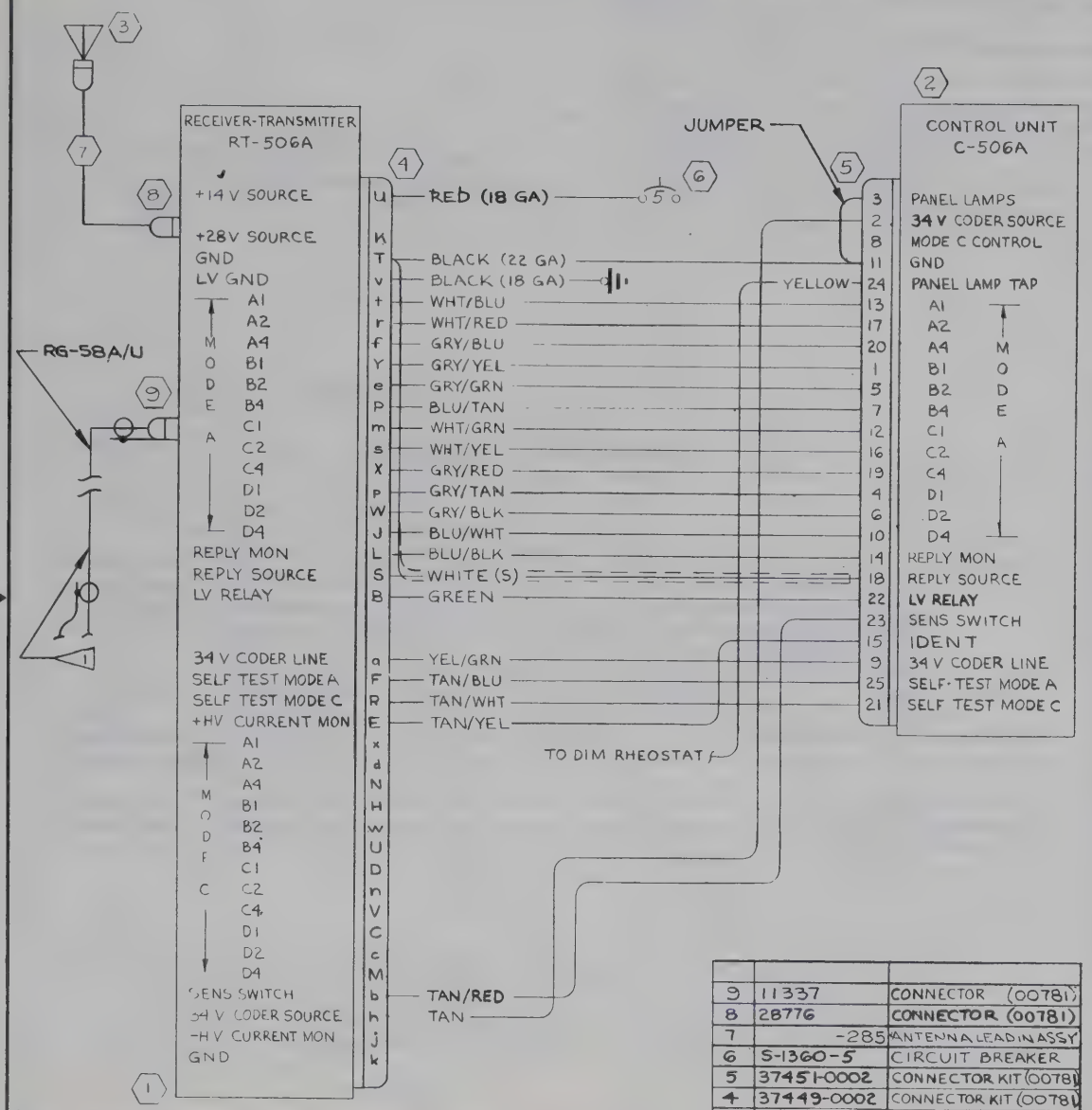

REVISIONS			
LTR	DESCRIPTION	DATE	APPROVED

WIRE CODE NO.	GA	MATERIAL	LG	TERMINALS			SERIALS
TAN/YEL	22	-22-10-4		SOLDER	SOLDER		
CABLE		RG-58A/U		UG-88C/U	1		
TAN/WHT	22	-22-10-9		SOLDER	SOLDER		
TAN/BLU	22	-22-10-6					
TAN/RED	22	-22-10-2					
TAN	22	-22-10					
WHT/BLU	22	-22-9-6					
WHT/GRN	22	-22-9-5					
WHT/YEL	22	-22-9-4					
WHT/RED	22	-22-9-2					
GRY/TAN	22	-22-8-10					
GRY/BLU	22	-22-8-6					
GRY/GRN	22	-22-8-5					
GRY/YEL	22	-22-8-4					
GRY/RED	22	-22-8-2					
GRY/BLK	22	-22-8-0					
BLU/TAN	22	-22-6-10					
BLU/WHT	22	-22-6-9					
WHITE	20(S)	S-1461-20-9					
BLU/BLK	22	-22-6-0					
YEL/GRN	20	-20-4-5					
GREEN	20	-20-5					
YELLOW	20	-20-4			SOLDER		
RED	18	-18-2			S-1367-2-8		
BLACK	18	-18-0			S-1367-2-8		
BLACK	22	-22-0		SOLDER	SOLDER		

WIRE TABLE

ITEM NO	PART NO.	DESCRIPTION
9	11337	CONNECTOR (00781)
8	28776	CONNECTOR (00781)
7	-285	ANTENNA LEAD IN ASSY
6	S-1360-5	CIRCUIT BREAKER
5	37451-0002	CONNECTOR KIT (00781)
4	37449-0002	CONNECTOR KIT (00781)
3	34970-0000	ANTENNA (00781)
2	34960-0000	CONTROL UNIT (00781)
1	34950-0014	RCVR/XMTR (00781)

EQUIPMENT TABLE

1. SUPRESSOR CABLE ROUTES WITH CABLE TO CONTROL PANEL. CENTER CONDUCTOR CONNECTS TO PIN 4 OF 300 DME CABLE & SHIELD CONNECTS TO PIN 8. CENTER CONDUCTOR TERMINATED WITH END CAP WHEN NOT USED.

CONTRACT NO:

	NAME	DATE
DESIGN	G WOOD	7-22-68
GROUP	H. Wise	7-20-68
DRAWN	SCRAPER	7-18-68
CHECK	HARRIS	7-18-68
STRESS		
PROJECT		
APPD	R.E. Moore	7-19-68

Cessna AIRCRAFT CO.
COMMERCIAL AIRCRAFT DIV.
5800 E. PAWNEE
WICHITA, KANSAS

TITLE
WIRING DIAGRAM — CESSNA 400 TRANSPONDER (ARC TYPE 506A)

SIZE C | CODE IDENT. NO. 71379 | DWG NO. 0770750

SCALE NONE | 182 | PAGE 2.46.0

FORM NO. 80715

FD&RR 10003 (SR5852) IX

REVISION			
LET	DESCRIPTION	DATE	APPD

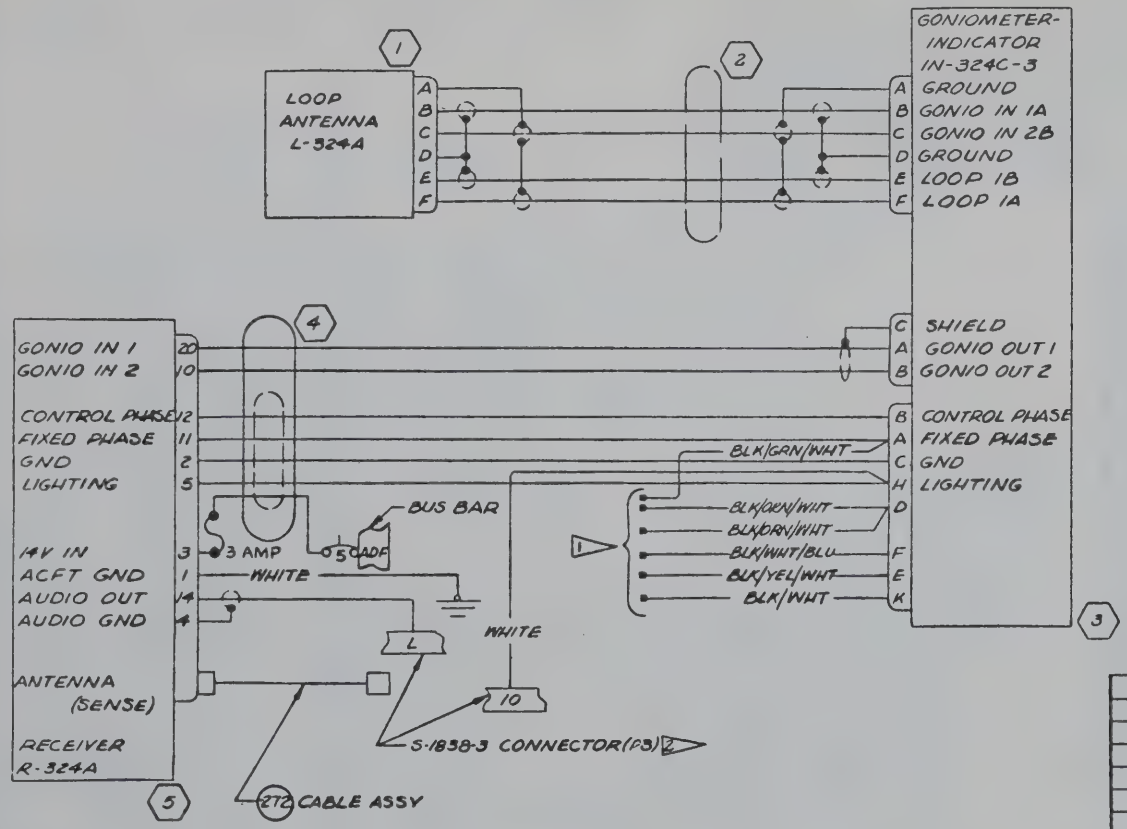

NOTES:
1. THESE WIRES TO BE CUT & CAPPED APPROX 2" FROM PLUG.
2. WIRE TERMINALS S-1897-1

WIRE CODE NO.	GA	MATERIAL	LG	TERMINALS		SERIALS

WIRE TABLE

ITEM NO.	PART NO.	DESCRIPTION
5	36380-1000	RECEIVER
4	38422-0014	CABLE ASSY
3	38450-0003	GONIOMETER IND.
2	33827	LOOP CABLE ASSY
1	36420-1100	LOOP ANTENNA

EQUIPMENT TABLE

CES-1000 IS APPLICABLE VENDOR CODES PER S-1400
CES-XXXX=CESSNA SPEC. NO.
S-XXX OR CMXXXX=CESSNA STD. NO.

SUPERSEDES:

SUPERSEDED BY:

CONTRACT NO:

	NAME	DATE
DESIGN	G. WOOD	8-1-68
GROUP	H. Wiel	7-29-68
DRAWN	E. YARBROUGH	7-24-68
CHECK	HARRIS	7-24-68
STRESS	N.F. GEIDE	7-29-68
PROJECT		7-26-68
APPD	MDS	7-26-68

Cessna AIRCRAFT CO.
COMMERCIAL AIRCRAFT DIV.
5800 E. PAWNEE
WICHITA, KANSAS

TITLE
WIRING DIAGRAM — CESSNA 400 ADF (ARC TYPE 324A)

SIZE	CODE IDENT. NO.	DWG NO.
C	71379	0770750

SCALE: NONE | 182 | PAGE: 2.47.1

(SR 5852)II ED & AR 02388

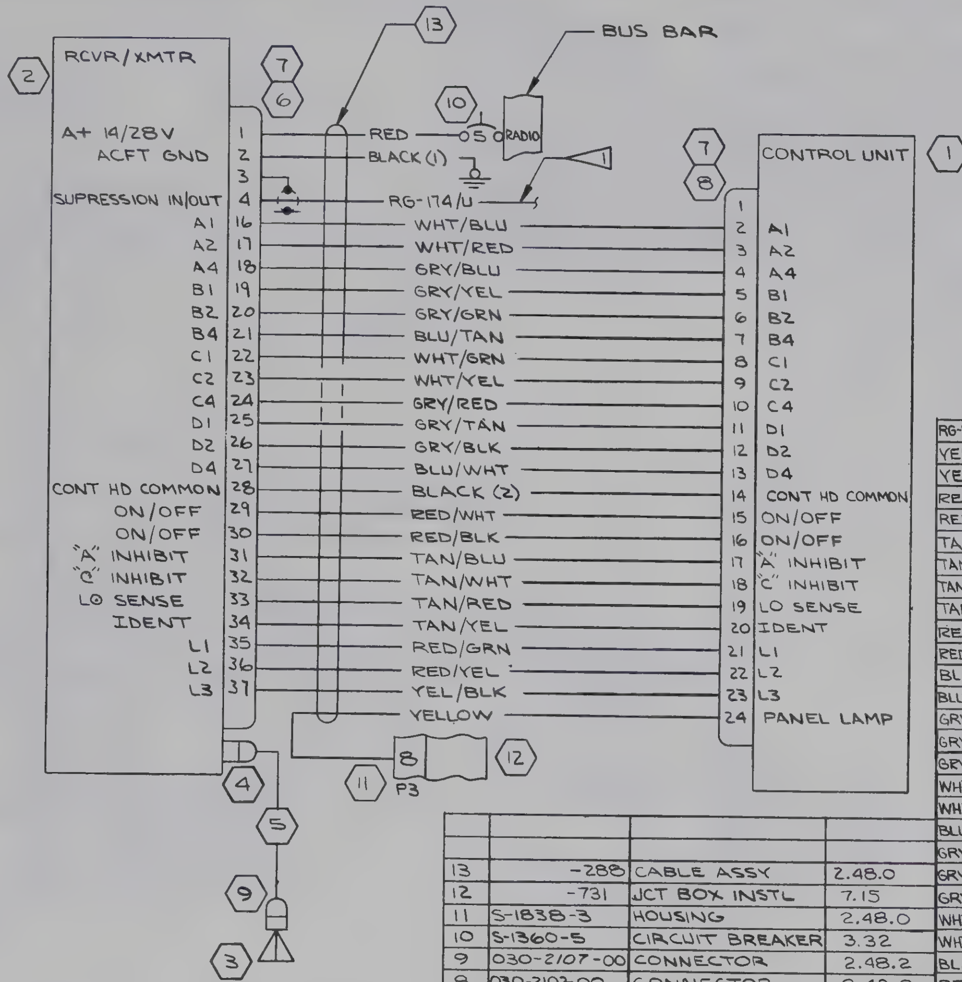

REVISION			
LET	DESCRIPTION	DATE	APPD
A	BY REV: GRY/RED WAS GRY/GRN(2), RED/WHT WAS RED(1), RED/BLK WAS RED(2), RED/YEL WAS YEL/WHT, YELLOW WAS GRY/YEL(2), GRY/YEL WAS GRY/YEL(1), GRY/GRN WAS GRY/GRN(1) RED WAS RED(3) ED&RR 10333 (SR 5905)	RLY 1-23-69	JWH mps

NOTES:

1. SUPRESSOR CABLE ROUTES WITH CABLE TO CONTROL PANEL. CENTER CONDUCTOR CONNECTS TO PIN 4 OF 300 DME CABLE & SHIELD CONNECTS TO PIN 8. CENTER CONDUCTOR TERMINATED WITH END CAP WHEN NOT USED

WIRE CODE NO.	GA	MATERIAL	LG	TERMINALS		SERIALS
RG-174/U		CABLE		SOLDER	◁1	
YELLOW	20	-20-4		SOLDER	S-1837-1	
YEL/BLK	22	-22-4-0			SOLDER	
RED/YEL	22	-22-2-4				
RED/GRN	22	-22-2-5				
TAN/YEL	22	-22-10-4				
TAN/RED	22	-22-10-2				
TAN/WHT	22	-22-10-9				
TAN/BLU	22	-22-10-6				
RED/BLK	18	-18-2-0				
RED/WHT	18	-18-2-9				
BLACK(2)	20	-20-0				
BLU/WHT	22	-22-6-9				
GRY/BLK	22	-22-8-0				
GRY/TAN	22	-22-8-10				
GRY/RED	22	-22-8-2				
WHT/YEL	22	-22-9-4				
WHT/GRN	22	-22-9-5				
BLU/TAN	22	-22-6-10				
GRY/GRN	22	-22-8-5				
GRY/YEL	22	-22-8-4				
GRY/BLU	22	-22-8-6				
WHT/RED	22	-22-9-2				
WHT/BLU	22	-22-9-6			SOLDER	
BLACK(1)	18	-18-0			S-1367-2-8	
RED	18	-18-2		SOLDER	S-1367-2-8	

WIRE TABLE

ITEM NO.	PART NO.	DESCRIPTION	PAGE
13	-288	CABLE ASSY	2.48.0
12	-731	JCT BOX INSTL	7.15
11	S-1838-3	HOUSING	2.48.0
10	S-1360-5	CIRCUIT BREAKER	3.32
9	030-2107-00	CONNECTOR	2.48.2
8	030-2102-00	CONNECTOR	2.48.0
7	030--1019-00	CA CLAMP HALF	3.32
6	030-2109-00	CONNECTOR	2.48.0
5	-289	CABLE ASSY	2.48.0
4	030-0060-00	CONNECTOR	2.48.2
3	C589505-0101	ANTENNA	6.17
2	C589504-0101	RCVR/XMTR UNIT 12V	4.28
1	C589503-0101	CONTROL PANEL 12V	3.32

EQUIPMENT TABLE

CES-1000 IS APPLICABLE
VENDOR CODES PER S-1400
CES-XXXX=CESSNA SPEC. NO.
S-XXX OR CMXXXX=CESSNA STD. NO.

SUPERSEDES:

SUPERSEDED BY:

CONTRACT NO:

	NAME	DATE
DESIGN	V R SIPES	8/9/68
GROUP	H. Wied	11-12-68
DRAWN	YOUNGERS	10-30-68
CHECK	HARRIS	11-5-68
STRESS	W. DALE	11-11-68
PROJECT	N. McClintic	11-15-68
APPD	SWANEY	11-7-68

Cessna AIRCRAFT CO.
COMMERCIAL AIRCRAFT DIV.
5800 E. PAWNEE
WICHITA, KANSAS

TITLE
WIRING DIAGRAM — CESSNA 300 TRANSPONDER

SIZE	CODE IDENT. NO.	DWG NO.
C	71379	0770750

SCALE: NONE | 182 | PAGE: 2.48.1

ED&RR 10045 (SR5905)

FORM NO 80-219A

REVISION			
LET	DESCRIPTION	DATE	APPD
A	BY REV: P.2.49.0 WAS P 2.47.1 (SR5852) IX	LES 8-26-68	JWH MDS ALA HJW

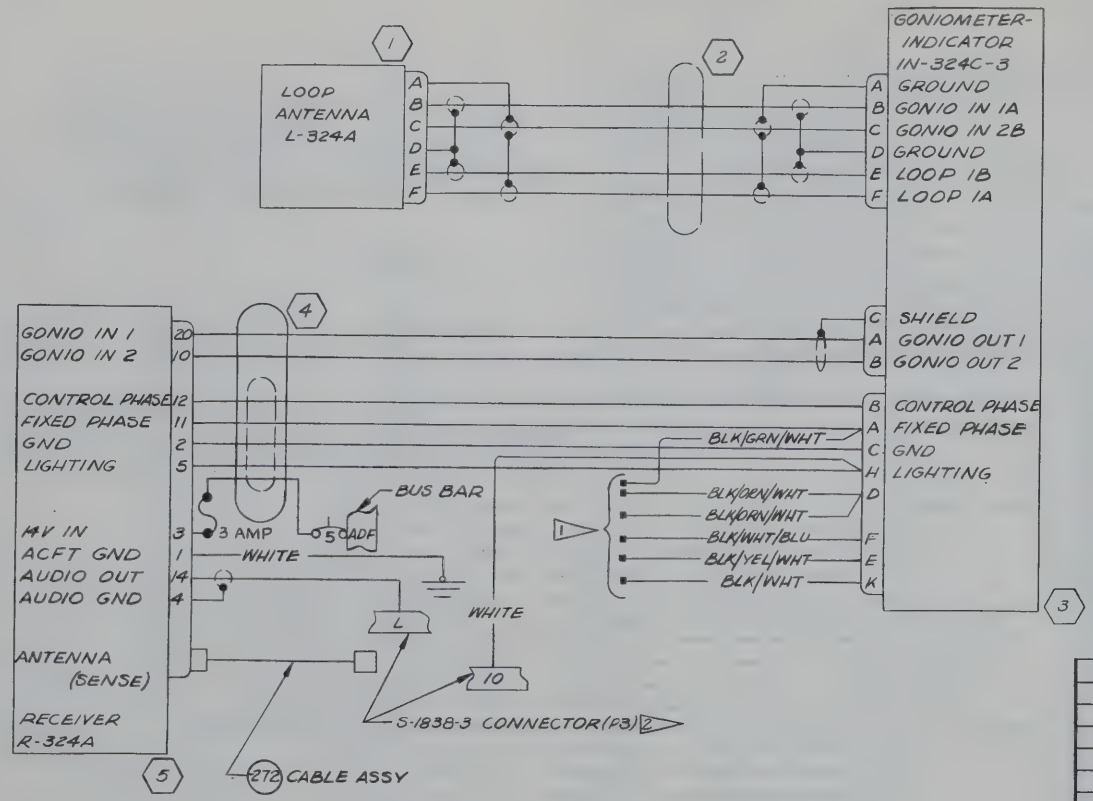

NOTES:

1. THESE WIRES TO BE CUT & CAPPED APPROX 2" FROM PLUG.
2. WIRE TERMINALS S-1837-1

ITEM NO.	PART NO.	DESCRIPTION	PAGE
5	36380-1000	RECEIVER	3.30
4	38422-0014	CABLE ASSY	3.30
3	38450-0003	GONIOMETER IND.	3.30
2	33827	LOOP CABLE ASSY	6.11
1	36420-1100	LOOP ANTENNA	6.11

EQUIPMENT TABLE

CES-1000 IS APPLICABLE
VENDOR CODES PER S-1400
CES-XXXX=CESSNA SPEC. NO.
S-XXX OR CMXXXX=CESSNA STD. NO.

SUPERSEDES:

SUPERSEDED BY:

WIRE CODE NO.	GA	MATERIAL	LG	TERMINALS		SERIALS

WIRE TABLE

CONTRACT NO:

	NAME	DATE
DESIGN	G WOOD	8-1-68
GROUP	H. Wise	7-29-68
DRAWN	E. YARBROUGH	7-24-68
CHECK	HARRIS	7-24-68
STRESS	R.F. GEIDE	7-29-68
PROJECT	[illegible]	8-2-68
APPD	MDS	7-26-68

Cessna AIRCRAFT CO.
COMMERCIAL AIRCRAFT DIV.
5800 E. PAWNEE
WICHITA, KANSAS

TITLE
WIRING DIAGRAM — CESSNA 400 ADF (ARC TYPE 324A)

SIZE	CODE IDENT. NO.	DWG NO.
C	71379	0770750

SCALE: NONE | 182 | PAGE: 2.49.0

FORM NO. 80-218A

(SR 5852) IX ED & RR 02388

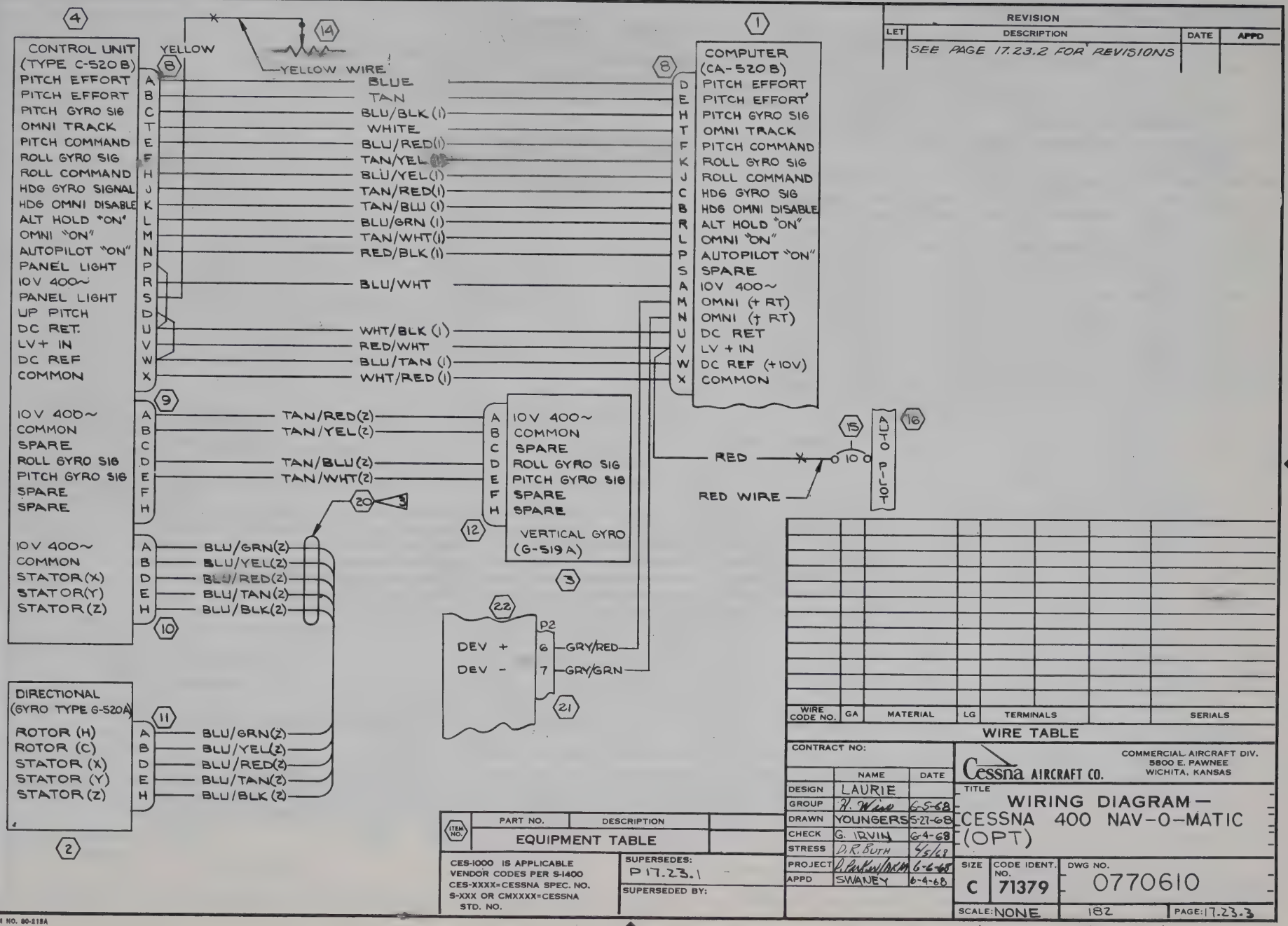

REVISION			
LET	DESCRIPTION	DATE	APPD
	SEE PAGE 17.23.2 FOR REVISIONS		

WIRE CODE NO.	GA	MATERIAL	LG	TERMINALS		SERIALS

WIRE TABLE

ITEM NO.	PART NO.	DESCRIPTION
		EQUIPMENT TABLE

CES-1000 IS APPLICABLE
VENDOR CODES PER S-1400
CES-XXXX=CESSNA SPEC. NO.
S-XXX OR CMXXXX=CESSNA
STD. NO.

SUPERSEDES: P17.23.1

SUPERSEDED BY:

CONTRACT NO:

	NAME	DATE
DESIGN	LAURIE	
GROUP	R. Wise	6-5-68
DRAWN	YOUNGERS	5-27-68
CHECK	G. IRVIN	6-4-68
STRESS	D.R. Buth	6/5/68
PROJECT	D. Parker/MKM	6-6-68
APPD	SWANEY	6-9-68

Cessna AIRCRAFT CO.
COMMERCIAL AIRCRAFT DIV.
5800 E. PAWNEE
WICHITA, KANSAS

TITLE
WIRING DIAGRAM —
CESSNA 400 NAV-O-MATIC
(OPT)

SIZE	CODE IDENT. NO.	DWG NO.
C	71379	0770610

SCALE: NONE | 182 | PAGE: 17.23.3

FORM NO. 80-2158A

ED&RR 02329 (SR5752)

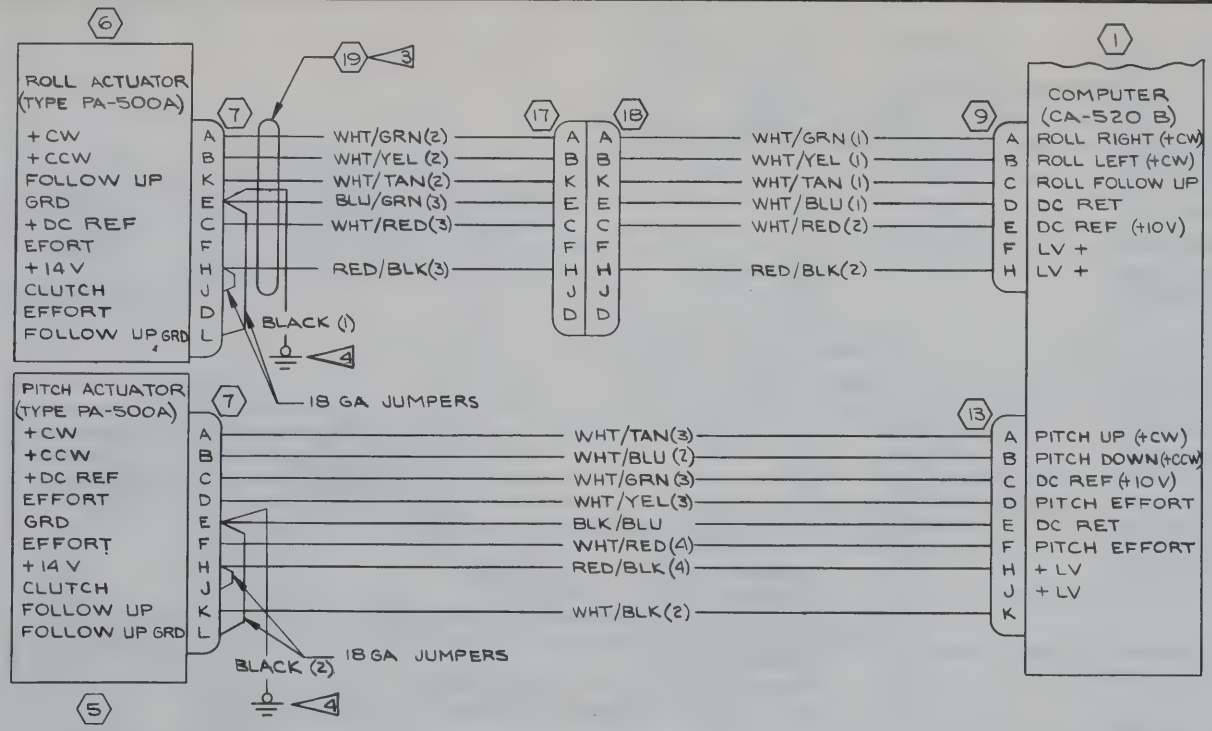

REVISION			
LET	DESCRIPTION	DATE	APPD

WIRE CODE NO.	GA	MATERIAL	LG	TERMINALS		SERIALS

WIRE TABLE

ITEM NO.	PART NO.	DESCRIPTION
		EQUIPMENT TABLE

CES-1000 IS APPLICABLE VENDOR CODES PER S-1400
CES-XXXX=CESSNA SPEC. NO.
S-XXX OR CMXXXX=CESSNA STD. NO.

SUPERSEDES: P 17.23.1

SUPERSEDED BY:

CONTRACT NO:

	NAME	DATE
DESIGN	LAURIE	
GROUP	H. Wind	6-5-68
DRAWN	YOUNGERS	5-21-68
CHECK	G. IQUIN	6-4-68
STRESS	O.R. BUTH	6/5/68
PROJECT	[illegible]	6-6-68
APPD	SWANEY	6-4-68

Cessna AIRCRAFT CO.
COMMERCIAL AIRCRAFT DIV.
5800 E. PAWNEE
WICHITA, KANSAS

TITLE
WIRING DIAGRAM—
CESSNA 400 NAV-O-MATIC
(OPT)

SIZE	CODE IDENT. NO.	DWG NO.
C	71379	0770610

SCALE: NONE | 182 | PAGE: 17.23.4

FORM NO. 80-215A

ED&RR 02329 (SRS752)

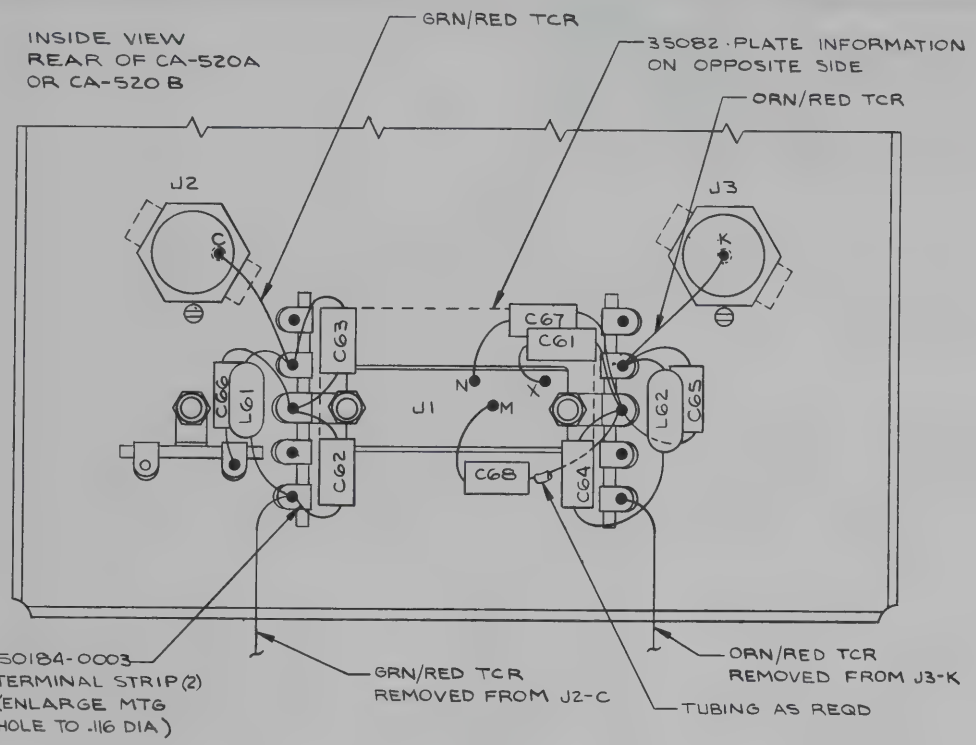

REVISION			
LET	DESCRIPTION	DATE	APPD.

SCHEMATIC DIAGRAM

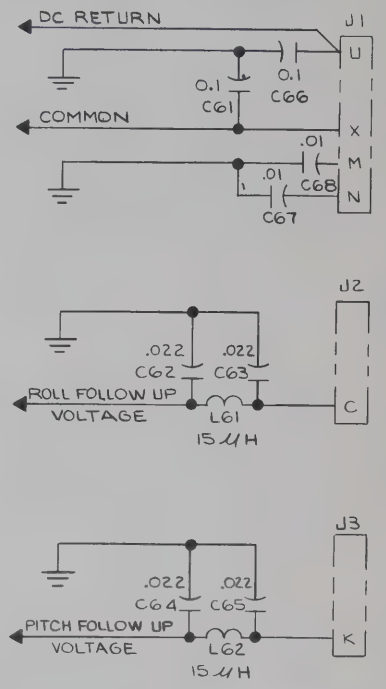

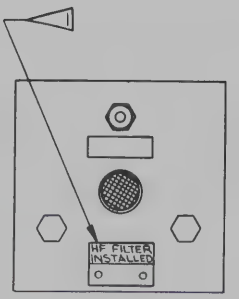

NOTES:

1. TO BE MOUNTED WITH EXISTING SCREWS WHEN MODIFICATION HAS BEEN COMPLETED
2. REMOVE NUTS FROM CONNECTOR J1, BACK OUT CONNECTOR, INSTALL INFORMATION PLATE 35082 REPLACE CONNECTOR ON CHASSIS THEN INSTALL TWO TERMINAL STRIPS 50184-0003 AS SHOWN USING CONNECTOR MTG SCREWS, REINSTALL NUTS
3. INSTALL CAPACITORS AND CHOKES AS SHOWN IN WIRING AND SCHEMATIC DIAGRAMS
4. UNSOLDER WIRES FROM J2-C AND J3-K AND RESOLDER TO NEW LOCATIONS AS SHOWN
5. CONTACTING SURFACES BETWEEN COMPUTER AND SHELF MUST BE CLEAN AND FREE OF CONTAMINANTS IN ORDER TO MAKE POSITIVE ELECTRICAL COTACT

FILTER KIT

ITEM NO.	ARC PART NO.	DESCRIPTION	QTY
1	32423-9223	.022 μF CAPACITOR	4
2	32423-9103	.010 μF CAPACITOR	2
3	32423-9102	.100 μF CAPACITOR	2
4	31193-0150	15 μH CHOKE	2
5	50184-0003	TERMINAL STRIP	2
6	35082	INFORMATION PLATE	1
7	21471-0502 (3")	GREEN/RED WIRE	1
8	21471-0302 (3")	ORANGE/RED WIRE	1
9	8800-0032 (6")	TUBING	1
10	35094	DRAWING	1

ITEM NO.	PART NO.	DESCRIPTION
	EQUIPMENT TABLE	

CES-1000 IS APPLICABLE VENDOR CODES PER S-1400
CES-XXXX=CESSNA SPEC. NO.
S-XXX OR CMXXXX=CESSNA STD. NO.

SUPERSEDES: P17.23.1.1

SUPERSEDED BY:

CONTRACT NO:	NAME	DATE
DESIGN	LAURIE	
GROUP	H. Wied	6-5-68
DRAWN	YOUNGERS	5-27-68
CHECK	G. IRVIN	6-4-68
STRESS	D.R. BUTH	6/5/68
PROJECT	[illegible]	6-6-68
APPD	SWANEY	6-4-68

Cessna AIRCRAFT CO.
COMMERCIAL AIRCRAFT DIV.
5800 E. PAWNEE
WICHITA, KANSAS

TITLE
WIRING DIAGRAM — NAV-O-MATIC 400 SYSTEM (OPT)

SIZE	CODE IDENT. NO.	DWG NO.
C	71379	0770610

SCALE: NONE | 182 | PAGE: 17.23.5

FORM NO. 60-218A

EDRR 02329 (SR 5752)

REVISION			
LET	DESCRIPTION	DATE	APPD
	SEE PAGE 17.26.0 FOR REVISIONS		

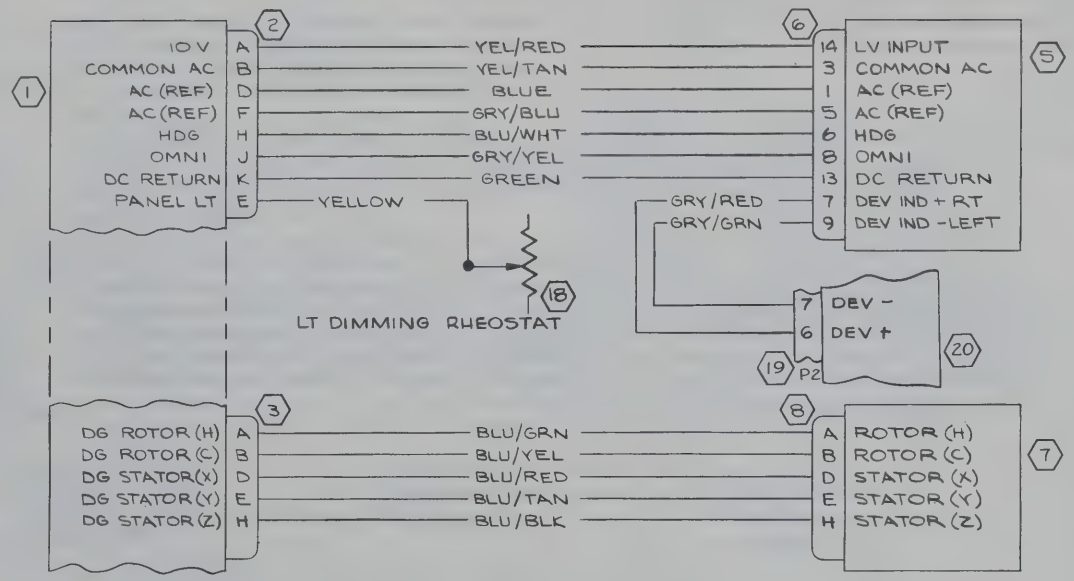

WIRE CODE NO.	GA	MATERIAL	LG	TERMINALS		SERIALS

WIRE TABLE

ITEM NO.	PART NO.	DESCRIPTION
		EQUIPMENT TABLE

CES-1000 IS APPLICABLE
VENDOR CODES PER S-1400
CES-XXXX=CESSNA SPEC. NO.
S-XXX OR CMXXXX=CESSNA
STD. NO.

SUPERSEDES: P17.25.0 & P17.25.1

SUPERSEDED BY:

CONTRACT NO:

	NAME	DATE
DESIGN	LAURIE	
GROUP	R. Wise	5-29-68
DRAWN	YOUNGERS	5-7-68
CHECK	G IRVIN	5-10-68
STRESS	D.R. BUTH	5/23/68
PROJECT	P.E. Parker	5/27/68
APPD	SWANEY	5-10-68

Cessna AIRCRAFT CO.
COMMERCIAL AIRCRAFT DIV.
5800 E. PAWNEE
WICHITA, KANSAS

TITLE
WIRING DIAGRAM —
CESSNA 300 NAV-O-MATIC
AUTOPILOT (14VOLT)

SIZE	CODE IDENT. NO.	DWG NO.
C	71379	0770610

SCALE: NONE | 182 | PAGE: 17.26.1

FORM NO. 80-215A

ED & RR 02325 (SR5751)

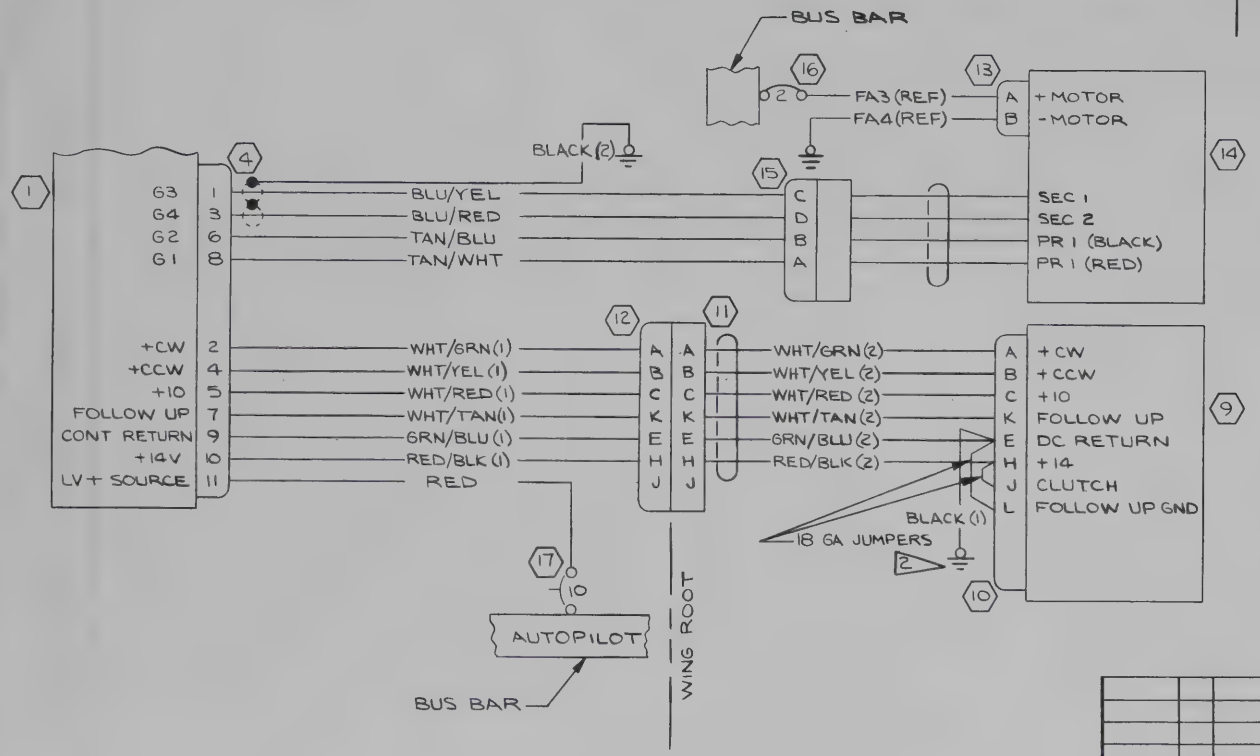

REVISION			
LET	DESCRIPTION	DATE	APPD

WIRE CODE NO.	GA	MATERIAL	LG	TERMINALS		SERIALS

WIRE TABLE

ITEM NO.	PART NO.	DESCRIPTION

EQUIPMENT TABLE

CES-1000 IS APPLICABLE
VENDOR CODES PER S-1400
CES-XXXX=CESSNA SPEC. NO.
S-XXX OR CMXXXX=CESSNA STD. NO.

SUPERSEDES: P17.25.0 & P17.25.1

SUPERSEDED BY:

CONTRACT NO:

	NAME	DATE
DESIGN	LAURIE	
GROUP	R. Wind	5-24-68
DRAWN	YOUNGERS	5-7-68
CHECK	G IRVIN	5-10-68
STRESS	D.R. BUTH	5/23/68
PROJECT	J. Parker	5/31/68
APPD	SWANEY	5-10-68

Cessna AIRCRAFT CO.
COMMERCIAL AIRCRAFT DIV.
5800 E. PAWNEE
WICHITA, KANSAS

TITLE
WIRING DIAGRAM —
CESSNA 300 NAV-O-MATIC
AUTOPILOT (14VOLT)

SIZE	CODE IDENT. NO.	DWG NO.
C	71379	0770610

SCALE: NONE | 182 | PAGE: 17.26.2

FORM NO. 80-215A

EDERR 02325 (SR57511)

TABLE OF CONTENTS

PAGE NO.	TITLE	DATE ISSUED	REV
	188 SERIAL 188-0471 & ON **A188 SERIAL A188-0471 & ON**		
2.2.1	W.D. - Cessna Transceiver 300 (ARC Type 524A)	6-13-68	C
2.3.1	Cessna 400 Transceiver (ARC Type 532A)	6-13-68	A
2.3.2	Cessna 400 Transceiver (ARC Type 532A) 24 Volt	6-13-68	A

SER 188-0001 & ON

CHG LET	REVISION	BY / DATE	CHK / APPD
A	ADD BLACK SPKR GRD WIRE XR6085-20 WAS 0413126-9	JH 4-14-66	[illegible]
B	BY REV: ADD S-1360-8, & R12½-50-RS 34. (SR5148) IX	JWH 6-7-67	YAK [illegible]
C	BY REV: ADD DETAIL A AND SER OUT 0770731-1; ADD 12 & 13; DELETE NOTES 1 & 2; S-1880-2 WAS X126085-20, GRN WAS GRN (REF), BLK(4) WAS BLK(REF) ED & RR 02478 (SR5550) IX	SEM 6-7-68	GKI MDS [illegible] DGK

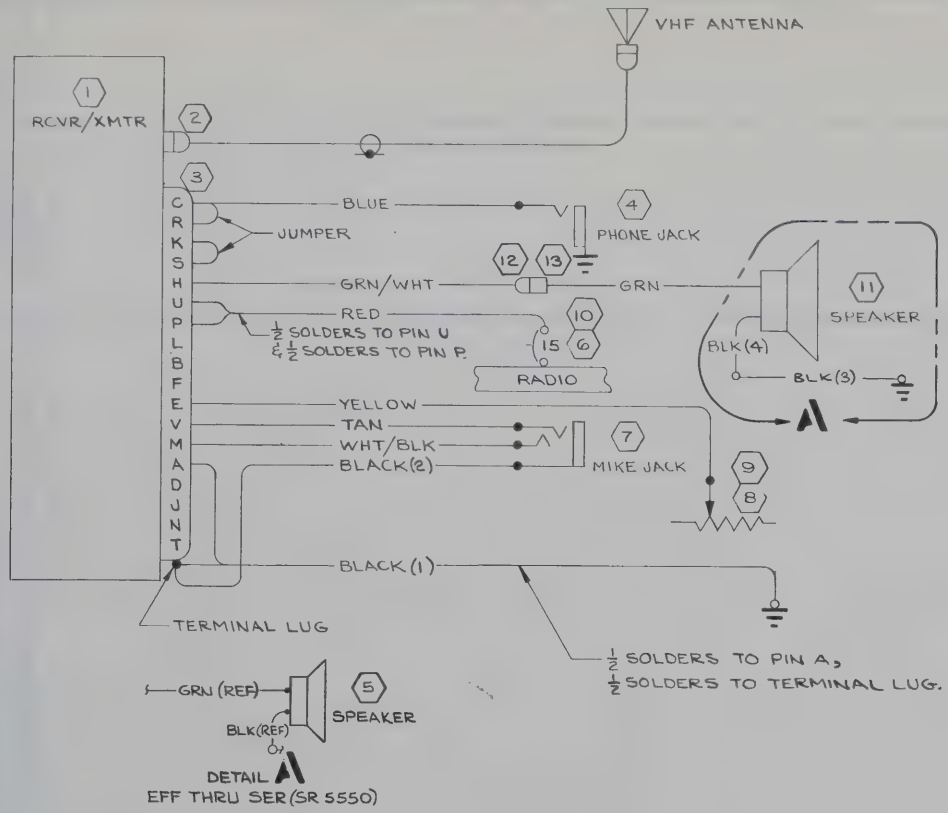

NOTES:

1. ~~WIRE MATERIAL PER S-1460.~~
2. ~~S-1635-1 PIN & S-1637-1 HOUSING-CAP.~~
3. YELLOW WIRE TERMINATES WITH S-1557-1 CAP. WHEN OPTIONAL MAP & INSTRUMENT LIGHT IS INSTALLED WITH CESSNA TRANSCEIVER 300 THE YELLOW WIRE SOLDERS TO THE LT DIM RHEOSTAT AS SHOWN.

ITEM NO	PART NO.	DESCRIPTION	INSTALLED ON
13	S-1637-2	HOUSING-PLUG	
12	S-1637-1	HOUSING-CAP	
11	C596505-0101	SPEAKER	
10	S-1360-8	CIRCUIT BREAKER	24 VOLT
9	R12½-50-RS34	RHEOSTAT (94310)	24 VOLT
8	S-1880-2	RHEOSTAT	12 VOLT
7	S-1102-1	MIKE JACK	
6	S-1360-15	CIRCUIT BREAKER	12 VOLT
5	0770731-1	SPEAKER ASSY	
4	S-1612-1	PHONE JACK	
3	29747-0018	CONNECTOR (ARC)	
2	29753	CONNECTOR (ARC)	
1	31390-1114	RCVR/XMTR (ARC TYPE RT-524A)	

EQUIPMENT TABLE

WIRE CODE NO.	GA	MATERIAL	LG	TERMINALS			SERIALS
BLK(4)	20	-20-0		S-1829-1	S-1367-2-8		
GRN	20	-20-5		S-1637-2	S-1829-1		
BLK(3)	20	-20-0		S-1367-2-8	S-1367-2-8		
YELLOW	18	-18-4		SOLDER	3		
BLK(1)	16	-16-0			S-1367-2-8		
BLK(2)	22	-22-0			SOLDER		
WHT/BLK	22	-22-9-0			SOLDER		
TAN	22	-22-10			SOLDER		
RED	16	-16-2			S-1367-2-6		
GRN/WHT	20	-20-5-9			S-1635-1		
BLUE	22	-22-6		SOLDER	SOLDER		

WIRE TABLE

CESSNA AIRCRAFT CO., COMMERCIAL AIRCRAFT DIVISION, WICHITA, KANSAS

	NAME	DATE
DRAWN	RIDDER	10-28-65
GROUP	H. Wise	12-6-65
CHECK	R. Stick	12-9-65
PROJ	[illegible]	12-13-65

TITLE: WIRING DIAGRAM— CESSNA TRANSCEIVER 300 (ARC TYPE 524A)

Cessna®

DWG NO: 1670001

SUPERSEDED BY: | SUPERSEDES: | MODEL: 188 | REV: C | PAGE: 2.2.1

FORM NO 80 161A

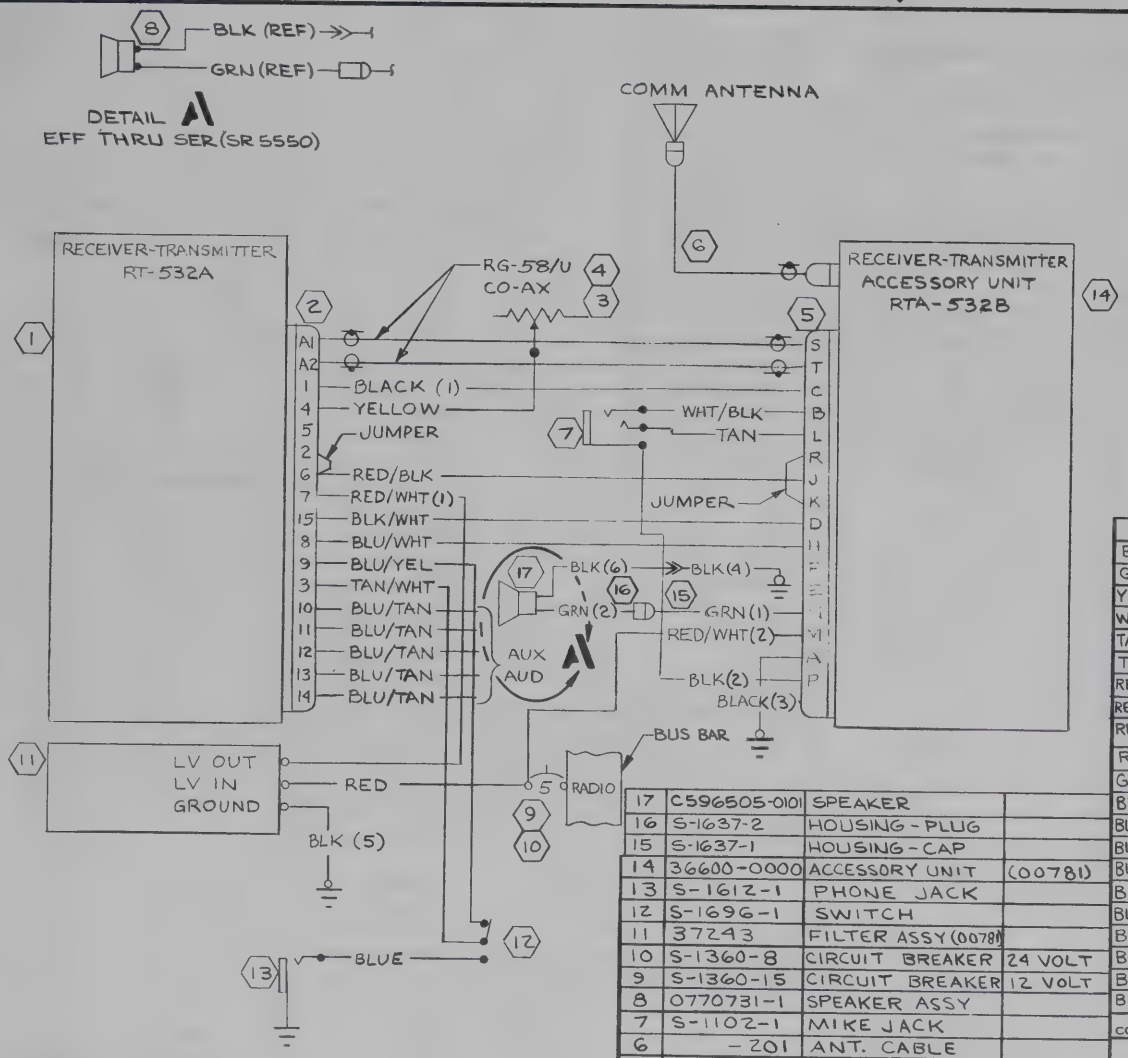

REVISION			
LET	DESCRIPTION	DATE	APPD
A	BY REV: ADD DETAIL A AND SER OUT 0770731-1; DELETE NOTE 1; ADD 15 & 16; S-1880-2 WAS XR6085-20, GRN(2) WAS GRN(REF), BLK(6) WAS BLK(REF); ADD MATERIAL TO WIRE TABLE ED & RR 02478. (SR 5550) IX	SEM 6-7-68	GW NADS RSED N.P.W DGK

WIRE CODE NO.	GA	MATERIAL	LG	TERMINALS		SERIALS
BLK(6)	18	18-0		S-1829-1	S-341-1	
GRN(2)	18	18-5		S-1637-2	S-1829-1	
YELLOW	18	18-4		SOLDER	3	
WHT/BLK	22	22-9-0			SOLDER	
TAN/WHT	22	22-10-9				
TAN	22	22-10		SOLDER		
RED/WHT(2)	18	18-2-9		S-1367-2-6		
RED/WHT(1)	18	18-2-9		SOLDER		
RED/BLK	18	18-2-0		SOLDER	SOLDER	
RED	18	18-2		S-1367-2-6	S-1367-2-8	
GRN(1)	18	18-5		SOLDER	S-1635-1	
BLK/WHT	18	18-0-9			SOLDER	
BLU/YEL	22	22-6-4			SOLDER	
BLU/WHT	18	18-6-9			SOLDER	
BLU/TAN	18	18-6-10		SOLDER	S-1635-1	
BLUE	22	18-6		SOLDER	SOLDER	
BLK(5)	18	18-0		S-1367-2-8	S-1367-2-8	
BLK(4)	18	18-0		S-341-1	S-1367-2-8	
BLK(3)	18	18-0		SOLDER	S-1367-2-8	
BLK(2)	22	18-0		SOLDER	SOLDER	
BLK(1)	18	18-0		SOLDER	SOLDER	

WIRE TABLE

ITEM NO.	PART NO.	DESCRIPTION	
17	C596505-0101	SPEAKER	
16	S-1637-2	HOUSING - PLUG	
15	S-1637-1	HOUSING - CAP	
14	36600-0000	ACCESSORY UNIT	(00781)
13	S-1612-1	PHONE JACK	
12	S-1696-1	SWITCH	
11	37243	FILTER ASSY (00781)	
10	S-1360-8	CIRCUIT BREAKER	24 VOLT
9	S-1360-15	CIRCUIT BREAKER	12 VOLT
8	0770731-1	SPEAKER ASSY	
7	S-1102-1	MIKE JACK	
6	-201	ANT. CABLE	
5	35525-0003	CONN (00781)	
4	R12½-50-RS34	RHEOSTAT (94310)	24 VOLT
3	S-1880-2	RHEOSTAT	12 VOLT
2	35693-0003	CONN (00781)	
1	33570-1000	XCVR (00781)	

EQUIPMENT TABLE

NOTES:

2 ~~S596505-0101 SPEAKER 0770731-1 HOUSING-CAP~~
YELLOW WIRE TERMINATES WITH S-1557-1 CAP. WHEN OPTIONAL MAP & INSTRUMENT LIGHT IS INSTALLED WITH CESSNA 400 XCVR, THE YELLOW WIRE SOLDERS TO THE LT DIM RHEOSTAT AS SHOWN

CES-1000 IS APPLICABLE VENDOR CODES PER S-1400
CES-XXXX=CESSNA SPEC. NO.
S-XXX OR CMXXXX=CESSNA STD. NO.

SUPERSEDES:

SUPERSEDED BY:

CONTRACT NO:

	NAME	DATE
DESIGN	G. WOOD	11-28-67
GROUP	H. Wise	11-27-67
DRAWN	G. WOOD	11-17-67
CHECK	LAURIE	11-20-67
STRESS	Withington	11-27-67
PROJECT	D.G. Kolb	12-8-67
APPD		

Cessna AIRCRAFT CO.
COMMERCIAL AIRCRAFT DIV.
5800 E. PAWNEE
WICHITA, KANSAS

TITLE
WIRING DIAGRAM — CESSNA 400 TRANSCEIVER (ARC TYPE 532A)

SIZE	CODE IDENT. NO.	DWG NO.
C	71379	1670001

SCALE: NONE | SER 188-0332 & ON | PAGE: 2.3.1

FORM NO. 80-215A

ED & RR 00183 (SR 5690) IX

REVISION			
LET	DESCRIPTION	DATE	APPD
A	BY REV: ADD DETAIL A AND SER OUT 0770731-1; ADD 13 & 14; DELETE NOTE 1; BLK(5) WAS BLK(REF), GRN(2) WAS GRN(REF) ED & RR 02478 (SR 5550) IX	SEM 6-7-68	MDS KLW HFW DGK

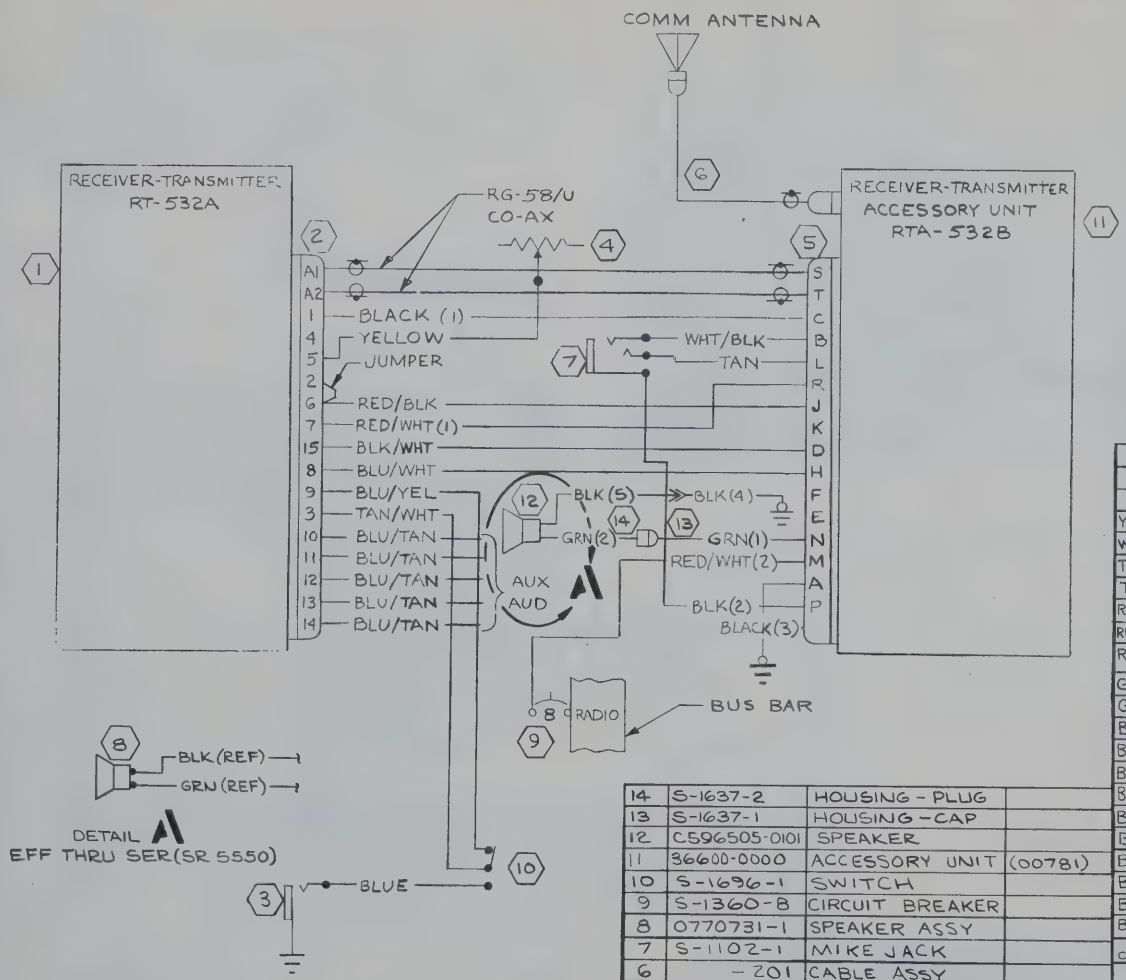

ITEM NO.	PART NO.	DESCRIPTION	
14	S-1637-2	HOUSING - PLUG	
13	S-1637-1	HOUSING - CAP	
12	C596505-0101	SPEAKER	
11	36600-0000	ACCESSORY UNIT	(00781)
10	S-1696-1	SWITCH	
9	S-1360-8	CIRCUIT BREAKER	
8	0770731-1	SPEAKER ASSY	
7	S-1102-1	MIKE JACK	
6	-201	CABLE ASSY	
5	35525-0003	CONN (00781)	
4	R12½-50-RS34	RHEOSTAT (94310)	
3	S-1612-1	PHONE JACK	
2	35693-0003	CONN (00781)	
1	33570-1000	XCVR (00781)	

EQUIPMENT TABLE

WIRE CODE NO.	GA	MATERIAL	LG	TERMINALS			SERIALS
YELLOW	18	18-4		SOLDER	2		
WHT/BLK	22	22-9-0			SOLDER		
TAN/WHT	22	22-10-0					
TAN	22	22-10		SOLDER			
RED/WHT(2)	18	18-2-9		S-1367-2-6			
RED/WHT(1)	18	18-2-9		SOLDER			
RED/BLK	18	18-2-0		SOLDER	SOLDER		
GRN(2)	18	18-5		S-1636-1	S-1829-1		
GRN(1)	18	18-5		SOLDER	S-1635-1		
BLK/WHT	18	18-0-9			SOLDER		
BLU/YEL	18	18-6-4			SOLDER		
BLU/WHT	22	22-6-9			SOLDER		
BLU/TAN	22	22-6-10		SOLDER			
BLUE	22	22-6		SOLDER	SOLDER		
BLK(5)	18	18-0		S-1829-1	S-341-1		
BLK(4)	18	18-0		S-341-1	S-1367-2-8		
BLK(3)	18	18-0		SOLDER	S-1367-2-8		
BLK(2)	22	22-0		SOLDER	SOLDER		
BLK(1)	18	18-0		SOLDER	SOLDER		

WIRE TABLE

NOTES:

1. ~~S-1635-1 PIN & S-1637-1 HOUSING CAP~~
2. YELLOW WIRE TERMINATES WITH S-1557-1 CAP. WHEN OPTIONAL MAP & INSTRUMENT LIGHT IS INSTALLED WITH CESSNA 400 XCVR, THE YELLOW WIRE SOLDERS TO THE LT DIM RHEOSTAT AS SHOWN

CES-1000 IS APPLICABLE
VENDOR CODES PER S-1400
CES-XXXX=CESSNA SPEC. NO.
S-XXX OR CMXXXX=CESSNA STD. NO.

SUPERSEDES:

SUPERSEDED BY:

CONTRACT NO:

	NAME	DATE
DESIGN	J. HUSTON	4-19-68
GROUP	H. Wise	4-19-68
DRAWN	C.GARCIA	4-15-68
CHECK	G. IRVIN	4-18-68
STRESS	RZW	4-19-68
PROJECT	DGKoller	4-19-68
APPD	SWANEY	4-18-68

Cessna AIRCRAFT CO.
COMMERCIAL AIRCRAFT, DIV.
5800 E. PAWNEE
WICHITA, KANSAS

TITLE
WIRING DIAGRAM — CESSNA 400 TRANSCEIVER (ARC TYPE 532A) 24 VOLT

SIZE	CODE IDENT. NO.	DWG NO.
C	71379	1670001

SCALE: NONE | 188 | PAGE: 2.3.2

FORM NO. 80-215A

ED & RR 01995 SER 188-0318

TABLE OF CONTENTS

PAGE NO.	TITLE	DATE ISSUED	REV
	P206 SERIAL P206-0520 & ON U206 SERIAL U206-1235 & ON TP206 SERIAL TP206-0520 & ON TU206 SERIAL TU206-1235 & ON		
2.0.2	Radio Speaker, Phone Jack, Mike, Light Rheo. & Pwr. Ckts.	9-13-68	NC
2.0.3	S. D. - Audio Junction Box, Internal Wiring	3-7-69	NC
2.3.1.4	Cessna 300 Nav/Com (Type 540A, 517R with IN-525A & IN-514)	9-13-68	NC
2.3.1.5	Cessna 300 Nav/Com (Type 540A, 517R with IN-525A & IN-514)	9-13-68	NC
2.4.2	W. D. - Cessna 300 Marker Beacon (Type 502B)	9-13-68	NC
2.6.0.1	Cable Assy - Audio, Omni & Xmtr Selector Switches	9-13-68	NC
2.6.1.1	W. D. - Audio Selector Switch	9-13-68	NC
2.6.2.1	W. D. - Omni Audio Xmtr Switch	9-13-68	NC
2.6.3.1	W. D. - Transmitter Selector Switch	9-13-68	NC
2.6.4	W. D. - Typical Switching - Narco Mark 12 & ADF	2-1-65	NC
2.6.8.1	W. D. - Typical Switching - Narco Mark 12A & ADF	12-10-68	NC
2.6.9	W. D. - Typical Switching - Partial "A" Iso Amp & ADF, HF Xcvr & Com 300	9-13-68	NC
2.7.3	W. D. - Cessna 300 Com (ARC Type 524A)	9-13-68	NC
2.12	Cessna ADF 300 (ARC Type 521B)	9-13-68	B
2.20.2	W. D. - Cessna 300 DME	9-13-68	NC
2.23.3	W. D. - Cessna 300 HF	9-13-68	NC
2.23.4	W. D. - Cessna 300 HF	9-13-68	NC
2.25.2	W. D. - Narco Mark 12A with VOA-8 & VOA-9	9-13-68	NC
2.25.3	W. D. - Narco Mark 12A with VOA-8 & VOA-9	9-13-68	NC
2.36.3	W. D. - King KA-25C Audio Amplifier	9-13-68	NC
2.39.1	W. D. - Narco UGR-2 Glideslope with Narco Mark 12A & VOA-9	11-30-67	A
2.43.1	W. D. - Cessna Glideslope (ARC Type R543B)	12-20-67	A

TABLE OF CONTENTS

PAGE NO.	TITLE	DATE ISSUED	REV
2.44.0	Cable Assy - Audio & Transmitter Selector Switch	9-13-68	A
2.44.1	W. D. - Audio Switching - Narco Mark 12A	9-13-68	NC-Inac
2.44.3	W. D. - Audio Switching Narco Mark 12A	9-13-68	NC
2.45.1	W. D. - Cessna 400 Glideslope (ARC Type R543B)	12-20-67	A
2.46.2.2	W. D. - Cessna 400 Nav/Com (ARC Type RT-522A & RT-532A)	9-13-68	NC
2.46.2.3	W. D. - Cessna 400 Nav/Com (ARC Type RT-522A & RT-532A)	9-13-68	NC
2.48.4	W. D. - Pitch Trim, Mike & Map Light, Control Wheel	9-13-68	NC
2.49	W. D. - Pitch Trim & Mike Switch Control Wheel	12-20-67	C
2.50	W. D. - Pitch Trim & Map Light Control Wheel	12-20-67	B
2.52.1	W. D. - Cessna 400 Transponder (ARC Type 506A)	4-23-68	B
2.53.1	W. D. - Mike Key - Control Wheel	9-13-68	NC
2.54.1	W. D. - Cessna 300 Transponder	2-3-69	A
2.55.1	W. D. - Cessna 400 ADF (ARC Type 324A)	9-13-68	NC
	DRAWING NUMBER 1270625		
17.26.3	Cessna 400 Nav-O-Matic (Opt.)	6-6-68	NC
17.26.4	Cessna 400 Nav-O-Matic (Opt.)	6-6-68	NC
17.26.5	Nav-O-Matic 400 System (Opt.)	6-6-68	NC
17.29.1	Cessna 300 Nav-O-Matic Autopilot (14-Volt)	6-6-68	NC
17.29.2	Cessna 300 Nav-O-Matic Autopilot (14-Volt)	6-6-68	NC

REVISION			
LET	DESCRIPTION	DATE	APPD

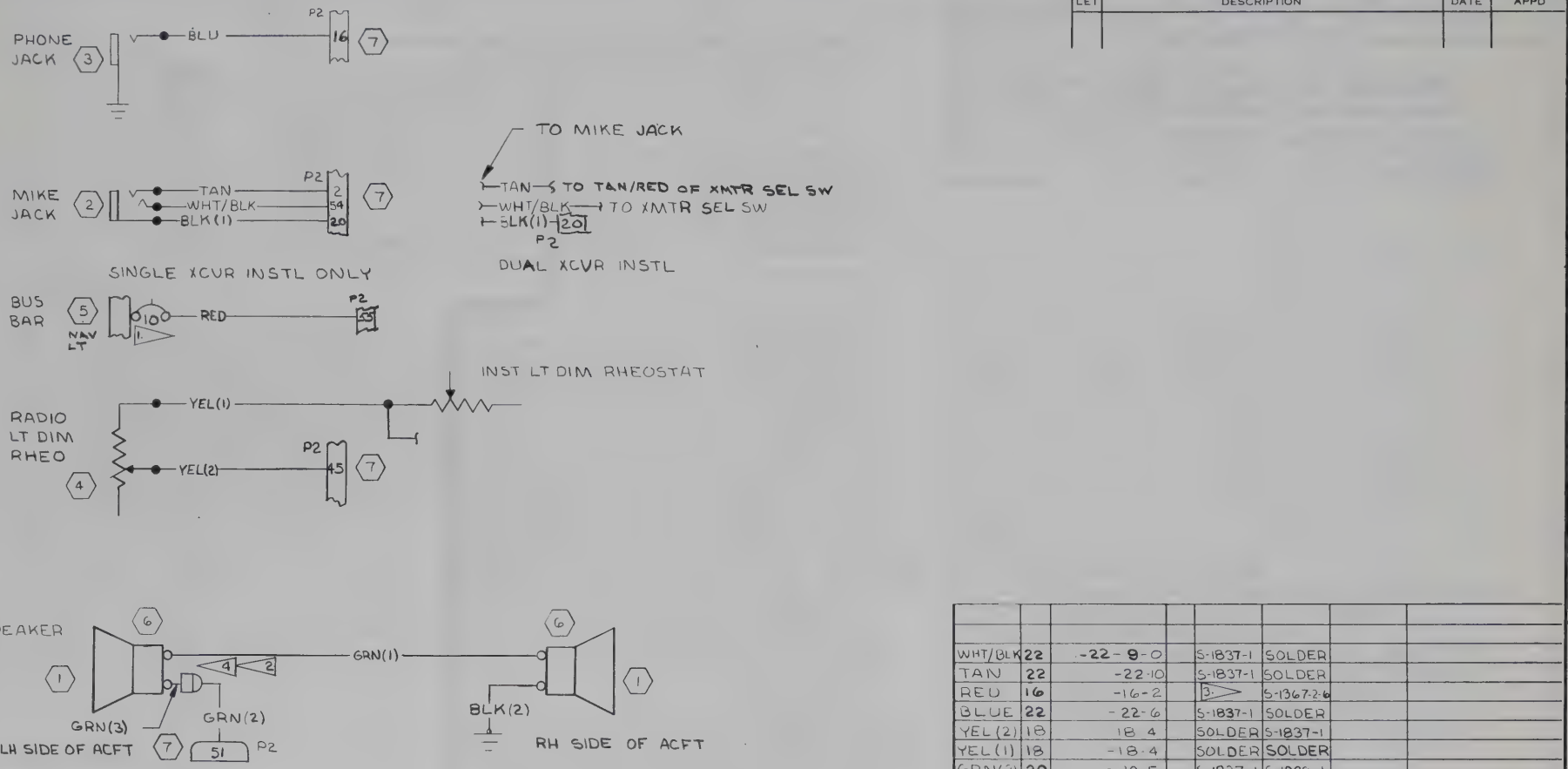

NOTES:

1. AMP RATING OF S-1360 CKT BKR TO BE DETERMINED BY INSTL
2. S-1635-1 PIN & S-1637-1 HOUSING-CAP
3. WIRES TO BE OF SUFFICIENT LENGTH TO ALLOW CONNECTION TO ALL POSSIBLE RADIO COMBINATION TERMINALS TO ATTACH TO WIRES, AS REQD BY THE VARIOUS RADIO INSTALLATIONS
4. S-1637-2 HOUSING-PLUG & S-1636-1 SOCKET

ITEM NO	PART NO.	DESCRIPTION
7	S-1838-1	HOUSING
6	S-1829-1	CONNECTOR
5	S-1360-10	CIRCUIT BKR
4	0413126-5	RHEOSTAT
3	S-1612-1	PHONE JACK
2	S-1102-1	MIKE JACK
1	C596505-0101	SPEAKER

EQUIPMENT TABLE

WIRE CODE NO.	GA	MATERIAL	LG	TERMINALS		SERIALS
WHT/BLK	22	-22-9-0		S-1837-1	SOLDER	
TAN	22	-22-10		S-1837-1	SOLDER	
RED	16	-16-2		3.	S-1367-2-6	
BLUE	22	-22-6		S-1837-1	SOLDER	
YEL(2)	18	18 4		SOLDER	S-1837-1	
YEL(1)	18	-18-4		SOLDER	SOLDER	
GRN(2)	20	-20-5		S-1837-1	S-1829-1	
GRN(1)	20	-20-5		S-1829-1	S-1829-1	
BLK(2)	22	-22-0		S-1829-1	S-1367-1-8	
BLK(1)	22	-22-0		3.	SOLDER	

WIRE TABLE

CES-1000 IS APPLICABLE VENDOR CODES PER S-1400 CES-XXXX=CESSNA SPEC. NO. S-XXX OR CMXXXX=CESSNA STD. NO.

SUPERSEDES: P 2.0.1

SUPERSEDED BY:

CONTRACT NO.

	NAME	DATE
DESIGN	SIPES VR	6/7/68
GROUP	K. Wiel	9-4-68
DRAWN	SCRAPER	8-21-68
CHECK	G. IRVIN	8-30-68
STRESS	R.F.GEIDE	9-3-68
PROJECT	[illegible]	9-[illegible]-68
APPD	SWANEY	8-30-68

Cessna AIRCRAFT CO.
COMMERCIAL AIRCRAFT DIV.
5800 E PAWNEE
WICHITA, KANSAS

TITLE
WIRING DIAGRAM — RADIO SPEAKER, PHONE JACK, MIKE, LIGHT RHEO. & PWR CKTS

SIZE	CODE IDENT. NO.	DWG NO.
C	71379	1270675

SCALE: NONE | P206 & U206 | PAGE: 2.0.2

FORM NO 80-215A

ED & RR 02391 (SR5402) & (SR5401) IX

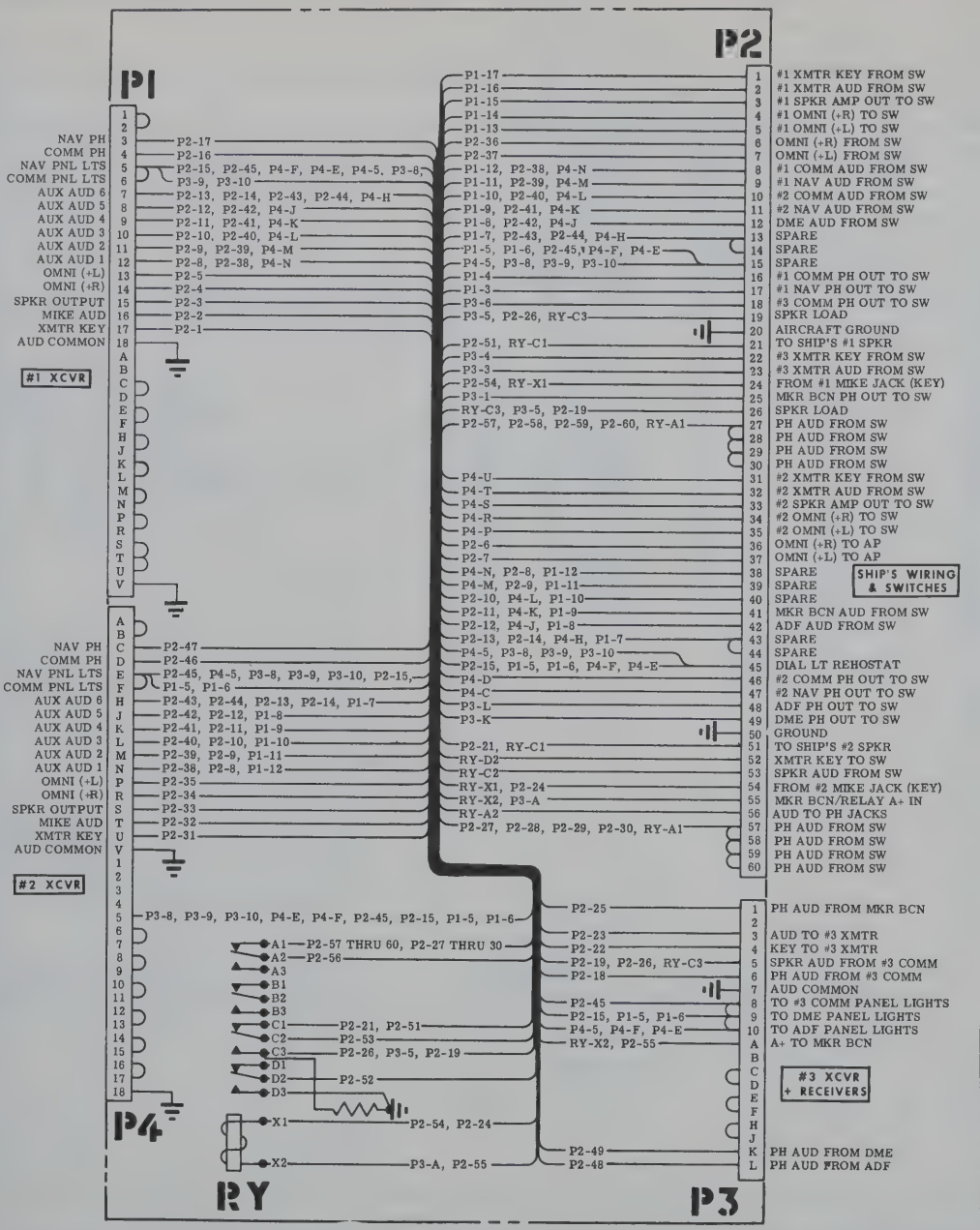

REVISIONS			
LTR	DESCRIPTION	DATE	APPROVED
A	BY REV: 465195-2 WAS 46195-2; ADD NOTE 8 EDRR 24170	DGP 4-69	

NOTES:

1. THIS DRAWING FOR TECHNICAL USE ONLY
2. P1 AND P4 MATE WITH S-1838-2 HOUSING (AMP 1-582191-5)
3. P2 MATES WITH S-1838-1 HOUSING (AMP 480146-7)
4. P3 MATES WITH S-1838-3 HOUSING (AMP 582963-2)
5. ALL THE ABOVE HOUSINGS USE S-1837-1 CONTACT PINS (AMP 42717-3LP) AND S-1836-1 KEYING PLUGS (AMP 582501-1)
6. CONTACTS CRIMP ON WITH AMP TOOL 90017
7. CONTACTS EXTRACT WITH AMP TOOL 465195-2
8. IF A CRIMPING TOOL IS NOT AVAILABLE WIRES MAY BE SOLDERED TO PINS IN LIEU OF CRIMPING

CONTRACT NO:	NAME	DATE
DESIGN	V.R. SIPES	1-13-69
GROUP	R. Wise	3-11-69
DRAWN	NUCKOLLS	2-7-69
CHECK	HARRIS	2-4-69
STRESS	Robert [illegible]	3-7-69
PROJECT	[illegible]	[illegible]
APPD	M.O. Swaney	3-5-69

Cessna AIRCRAFT CO.
COMMERCIAL AIRCRAFT DIV.
5800 E. PAWNEE
WICHITA, KANSAS

TITLE
SCHEMATIC DIAGRAM - AUDIO JUNCTION BOX, INTERNAL WIRING

SIZE	CODE IDENT. NO.	DWG NO.
C	71379	1270675

SCALE: NONE | U206 & P206 | PAGE: 2.0.3

ED & RR 10361
SER P206-0520 & ON
SER U206-1235 & ON

REVISION			
LET	DESCRIPTION	DATE	APPD

NOTES:

1. CESSNA 300 NAV/COM AMPLIFIERS ARE OPERATED "ALWAYS HOT" SPKR OUTPUTS FROM EACH SYSTEM DRIVE EITHER 5Ω 10 WATT DUMMY LOAD OR THE SPKR AS DETERMINED BY TRANSMITTER SELECTED

WIRE CODE NO	GA	MATERIAL	LG	TERMINALS		SERIALS
YEL	18	-18-4		SOLDER	S-1837-1	
WHT/YEL	22	-22-9-4			SOLDER	
WHT/TAN	22	-22-9-10			SOLDER	
WHT/GRN	22	-22-9-5			SOLDER	
WHT/BLK	22	-22-9-0			S-1837-1	
TAN	22	-22-10			S-1837-	
RED/WHT	18	-18-2-9			S-1370-1	
RED/BLK	18	-18-2-0			S-1370-1	
RED	16	-16-2			S-1367-2-6	
GRY/RED(2)	22	-22-8-2			S-1837-1	
GRY/RED(1)	22	-22-8-2			SOLDER	
GRY/GRN(2)	22	-22-8-5			S-1837-1	
GRY/GRN(1)	22	-22-8-5			SOLDER	
GRN.W-T	20	-20-3-9			S-1837-1	
BLU/YEL	22S	S-431-22-10-4			SOLDER	
BLU/WHT	22S	S-43-22-6-9			SOLDER	
BLU/TAN(5)	22	-22-6-10			S-1837-1	
BLU/TAN(4)	22	-22-6-10				
BLU/TAN(3)	22	-22-6-10				
BLU/TAN(2)	22	-22-6-10				
BLU/TAN(1)	22	-22-6-10			S-1837-1	
BLU/RED	22S	S-1461-22-6-2			SOLDER	
BLU/BLK	22S	S-1461-22-6-0			SOLDER	
BLU	22	-22-6		SOLDER	S-1837-1	
BLK (2)	22	-22-0		S-1367-2-8	S-1837-1	
BLK (1)	16	-16-0		S-1367-2-8	S-1367-2-8	

WIRE TABLE

ITEM NO.	PART NO.	DESCRIPTION	
11	36120-1114	XCVR (TYPE 517R)	00781
10	31640-0000	IND (TYPE IN-514)	00781
9	32350-0000	IND (TYPE IN-525A)	00781
8	18397	CONNECTOR	00781
7	057008-1	JUNCTION BOX ASSY	
6	S-1838-2	HOUSING	
5	29752	CONNECTOR	00781
4	29753	CONNECTOR	00781
3	S-1360-15	CIRCUIT BREAKER	
2	29747-0026	CONNECTOR	00781
1	37600-1114	XCVR (TYPE 540A)	00781

EQUIPMENT TABLE

CES-1000 IS APPLICABLE
VENDOR CODES PER S-1400
CES-XXXX=CESSNA SPEC. NO.
S-XXX OR CMXXXX=CESSNA STD. NO.

SUPERSEDES: P.2.3.1.0, P.2.3.1.2

SUPERSEDED BY:

CONTRACT NO:

	NAME	DATE
DESIGN	SIPES YR	6/7/68
GROUP	H. Wind	9-4-68
DRAWN	SCRAPER	8-23-68
CHECK	G. IRVIN	8-30-68
STRESS	R.F. GEIDE	9-3-68
PROJECT		9-11-68
APPD	SWANEY	8-30-68

Cessna AIRCRAFT CO.
COMMERCIAL AIRCRAFT DIV.
5800 E. PAWNEE
WICHITA, KANSAS

TITLE
WIRING DIAGRAM —
CESSNA 300 NAV/COM (TYPE 540A, 517R WITH IN525A & IN-514)

SIZE C | CODE IDENT. NO. 71379 | DWG NO. 1270675

SCALE: NONE | U206 & P206 | PAGE: 2.3.1.4

FORM NO. 80-215A

ED # RR02391 (SR5401) & (SR5402) IX

REVISION			
LET	DESCRIPTION	DATE	APPD

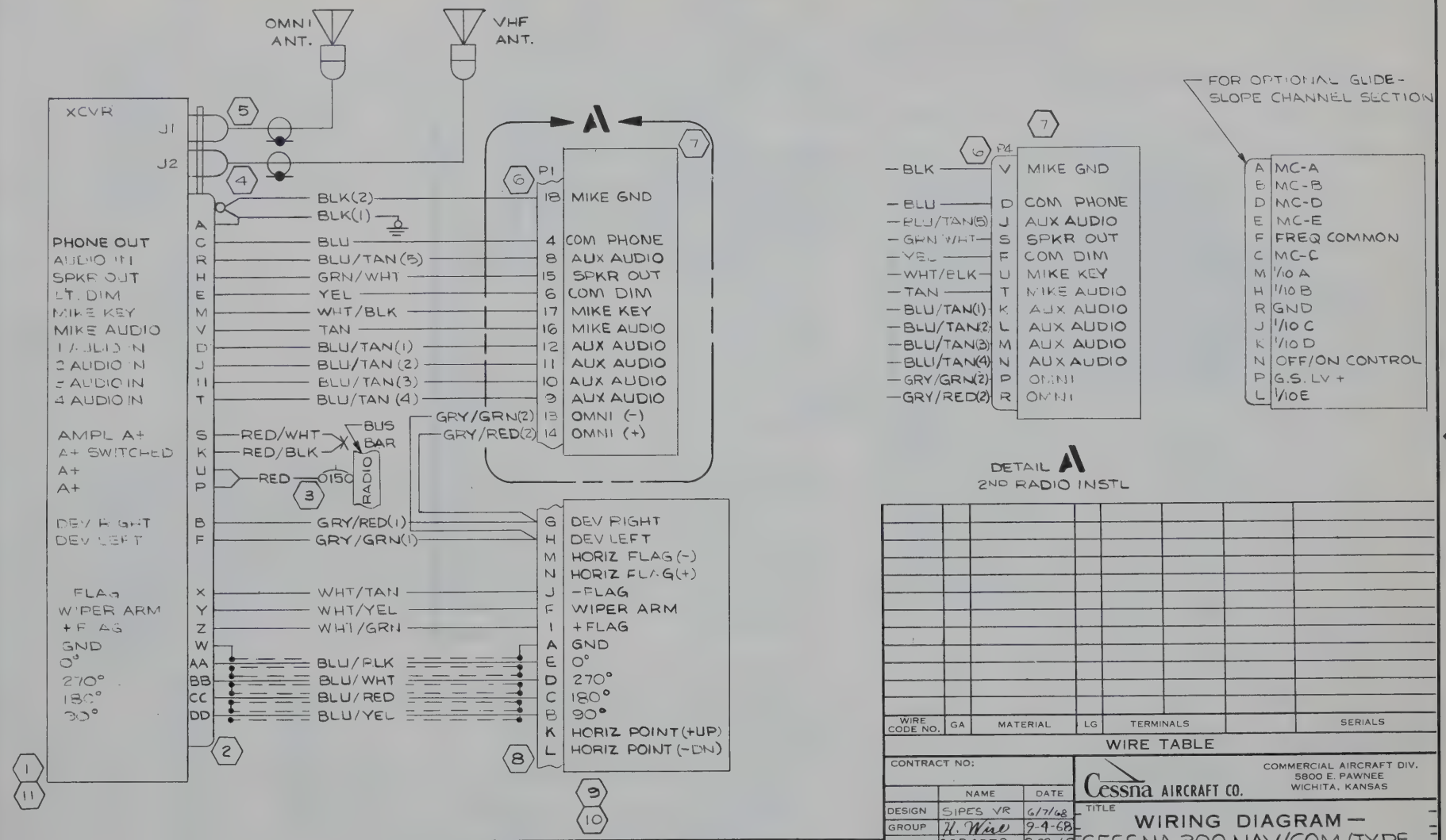

DETAIL A
2ND RADIO INSTL

WIRE CODE NO.	GA	MATERIAL	LG	TERMINALS		SERIALS

WIRE TABLE

ITEM NO.	PART NO.	DESCRIPTION

EQUIPMENT TABLE

CES-1000 IS APPLICABLE
VENDOR CODES PER S-1400
CES-XXXX=CESSNA SPEC. NO.
S-XXX OR CMXXXX=CESSNA STD. NO.

SUPERSEDES: P. 2.3.1.1
P. 2.3.1.3

SUPERSEDED BY:

CONTRACT NO:

	NAME	DATE
DESIGN	SIPES VR	6/7/68
GROUP	H. Wise	9-9-68
DRAWN	SCRAPER	8-23-68
CHECK	G. IRVIN	8-30-68
STRESS	R.F. GEIDE	9-3-68
PROJECT		9-11-68
APPD	SWANEY	8-30-68

Cessna AIRCRAFT CO.
COMMERCIAL AIRCRAFT DIV.
5800 E. PAWNEE
WICHITA, KANSAS

TITLE
WIRING DIAGRAM — CESSNA 300 NAV/COM (TYPE 540A, 517R WITH IN525A & IN-514)

SIZE	CODE IDENT. NO.	DWG NO.
C	71379	1270675

SCALE: NONE | U206 & P206 | PAGE: 2.3.1.5

FORM NO 80-2*5A

EDERR02391 (SR5401) & (SR5402) IX

NOTES:

1. "PHONE" & "LO" FUNCTION TO BE ON KEY-WAY SIDE OF SW

REVISION			
LET	DESCRIPTION	DATE	APPD

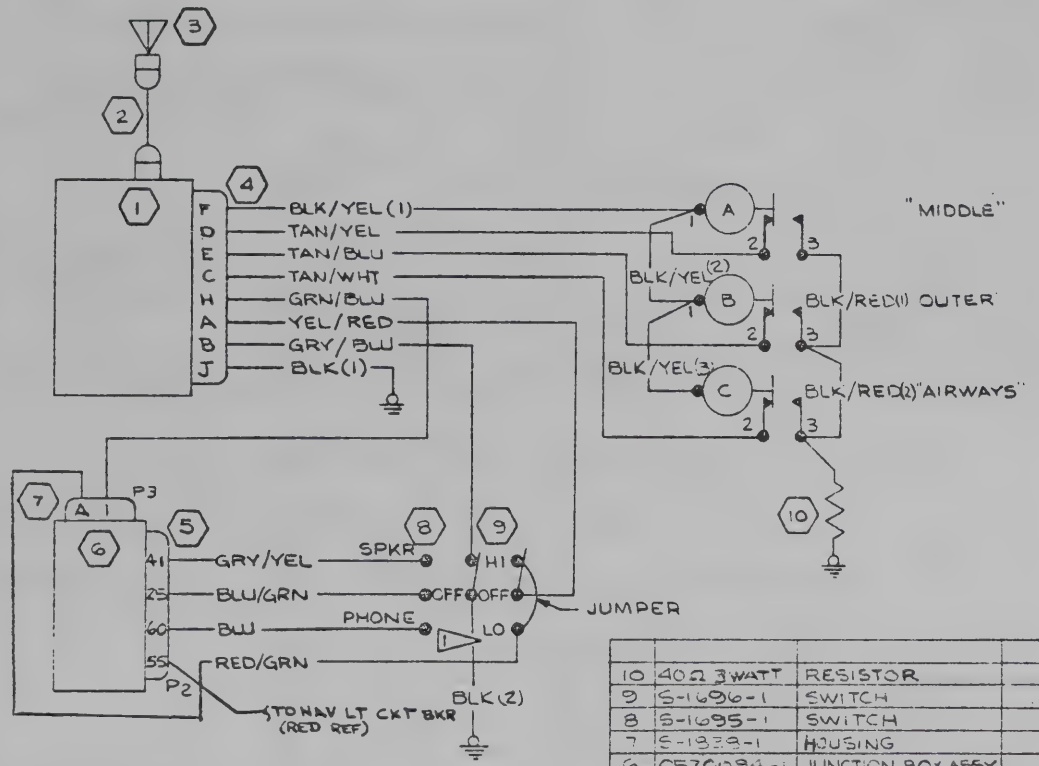

ITEM NO.	PART NO.	DESCRIPTION	VENDOR
10	40Ω 3 WATT	RESISTOR	
9	S-1696-1	SWITCH	
8	S-1695-1	SWITCH	
7	S-1838-1	HOUSING	
6	0570084-1	JUNCTION BOX ASSY	
5	S-1828-3	HOUSING	
4	28371-0003	PLUG	00781
3	0770681-1	MKR BCN ANT	
2	-246	CABLE ASSY	
1	31240-0014	MKR BCN RCVR	00781

EQUIPMENT TABLE

CES-1000 IS APPLICABLE VENDOR CODES PER S-1400
CES-XXXX=CESSNA SPEC. NO.
S-XXX OR CMXXXX=CESSNA STD. NO.

SUPERSEDES: P 2.4.1

SUPERSEDED BY:

WIRE CODE NO.	GA	MATERIAL	LG	TERMINALS			SERIALS
BLU/RED(2)	22	-22-0-2		SOLDER	SOLDER		
BLK/RED(1)	22	-22-0-		SOLDER	SOLDER		
YEL/RED	20	-20-4-2		SOLDER	SOLDER		
TAN/YEL	22	-22-10-4			SOLDER		
TAN/WHT	22	-22-10-5			SOLDER		
TAN/BLU	22	-22-10-6			SOLDER		
RED/GRN	20	-20-2-5			S-1837-1		
GRY/YEL	22	-22-8-4			S-1837-1		
GRY/BLU	22	-22-8-6			SOLDER		
GRN/BLU	20	-20-8-6			S-1837-1		
BLU/GRN	22	-22-6-5			S-1837-1		
BLU	22	-22-6			S-1837-1		
BLK/WHT	22	-22-0-4			SOLDER		
BLK/YEL(2)	22	-22-0-4			SOLDER		
BLK/YEL(1)	22	-22-0-4			SOLDER		
BLK(2)	22	-22-0		SOLDER	S-1367-1-R		
BLK(1)	22	-22-0		SOLDER	S-1367-1-R		

WIRE TABLE

CONTRACT NO:

Cessna AIRCRAFT CO.
COMMERCIAL AIRCRAFT DIV.
5800 E PAWNEE
WICHITA, KANSAS

	NAME	DATE
DESIGN	SIPES VR	6-10-68
GROUP	[illegible]	7-9-68
DRAWN	SCRAPER	8-22-68
CHECK	GIRVIN	8-30-68
STRESS	RFGEIDE	9-7-68
PROJECT	[illegible]	9-11-68
APPD	SWANEY	8-30-68

TITLE
WIRING DIAGRAM —
CESSNA 300 MARKER BEACON
(TYPE 502B)

SIZE	CODE IDENT. NO.	DWG NO.
C	71379	1270675

SCALE: NONE | U206 & P206 | PAGE: 2.4.2

FORM NO. 06-213A

ED&RR02394 (SR5401) & (SR5402) II

REVISION				
LET		DESCRIPTION	DATE	APPD

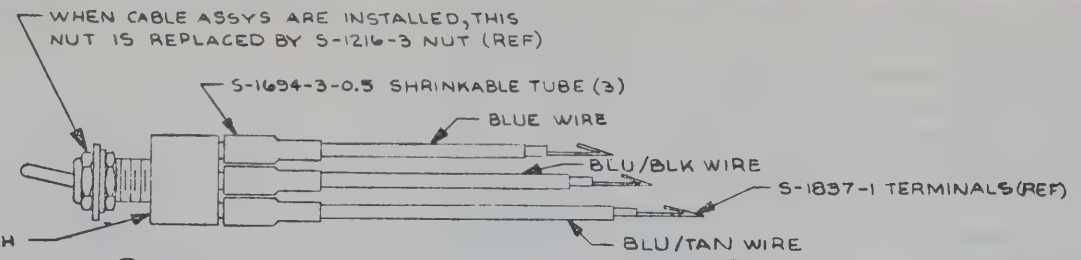

(283) CABLE ASSY - AUDIO SELECTOR SWITCH, COM 1
(282) CABLE ASSY - AUDIO SELECTOR SWITCH, NAV 1
(281) CABLE ASSY - AUDIO SELECTOR SWITCH, COM 2
(280) CABLE ASSY - AUDIO SELECTOR SWITCH, NAV 2

(284) CABLE ASSY - AUD SEL, SW, DME
(285) CABLE ASSY - AUD SEL SW, ADF
(293) CABLE ASSY - AUD SEL SW - MKR BCN

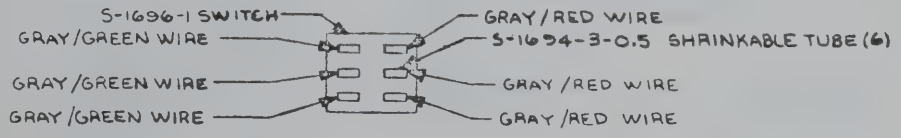

(278) CABLE ASSY - OMNI SELECTOR SWITCH (REAR VIEW)

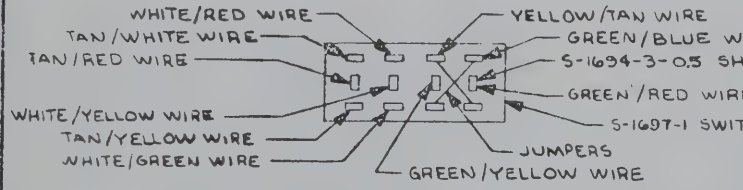

(278) CABLE ASSY - TRANSMITTER SELECTOR SW (REAR VIEW)

NOTES:

1. S-1694-3-0.5 TUBING INSTALLED ON ALL SWITCHES AS SHOWN ON AUDIO SELECTOR SWITCH
2. SWITCHES SHOWN WITH KEYWAY AT TOP
3. ALL WIRES ARE REFERENCED. REFER TO APPLICABLE WIRING DIAGRAM FOR FABRICATION INFORMATION

293	285	284	278	279	280	281	282	283	EFFECTIVE SERIALS	PAGE	PART NUMBER	DESCRIPTION
											-293	CABLE ASSY-MKR BCN SW
											-285	CABLE ASSY-AUD ADF
											-284	CABLE ASSY-AUD DME
AR	AR	AR			AR	AR	AR	AR		2.6.1.1		WIRING
				AR						2.6.2.1		WIRING
			AR							2.6.3.1		WIRING
			1								S-1697-1	SWITCH
				1							S-1696-1	SWITCH
1	1	1			1	1	1	1			S-1695-2	SWITCH
3	3	3	12	6	3	3	3	3			S-1694-3-0.5	SHRINK TUBE
											-278	CABLE ASSY XMTR SW
											-279	CABLE ASSY-OMNI SW
											-280	CABLE ASSY-AUD NAV 2
											-281	CABLE ASSY-AUD COM 2
											-282	CABLE ASSY-AUD NAV 1
											-283	CABLE ASSY-AUD COM 1

NO. REQD / NEXT ASSY

LIST OF MATERIAL

DO NOT SCALE PRINT
BREAK ALL SHARP EDGES
A/R = AS REQD
CES-XXXX = CESSNA SPEC. NO.
S-XXX OR CMXXXX = CESSNA STD. NO.
S = APPROX EQUAL SPACES
CES-1000 IS APPLICABLE VENDOR CODES PER S-1400

UNLESS OTHERWISE SPECIFIED DIMENSIONS ARE IN INCHES
TOLERANCES ARE
DECIMALS: .XX ±.03, .XXX ±.010
ANGLES: MACH 1, 2 PLACES ±1°, 1/2°
FOR HOLES, CSINKS, ETC., SEE CES 1012
FOR BASIC CODES SEE NAS 523

BJ-MS20470AD	BD-MS20426AD

SUPERSEDES: P.2.6.0
SUPERSEDED BY:

CONTRACT NO:

	NAME	DATE
DESIGN	SIMS YR	6/7/68
GROUP	H Wire	7-9-68
DRAWN	SCRAPER	8-21-68
CHECK	G IRVIN	8-30-68
STRESS	T.F. GEIDE	9-3-68
PROJECT		
APPD	SWANEY	9-30-68

Cessna AIRCRAFT CO.
COMMERCIAL AIRCRAFT DIV.
5800 E. PAWNEE
WICHITA, KANSAS

TITLE: CABLE ASSY - AUDIO, OMNI & XMTR SELECTOR SWITCHES

SIZE: C | CODE IDENT. NO.: 71379 | 1270675

SCALE: NONE | U2064P206 | PAGE: 2.6.0.1

FORM NO. 00-221

ED4RR02394 (SR3401)(SR3402)

NOTES:
1. SPEAKER FUNCTION ON KEYWAY SIDE OF SWITCH

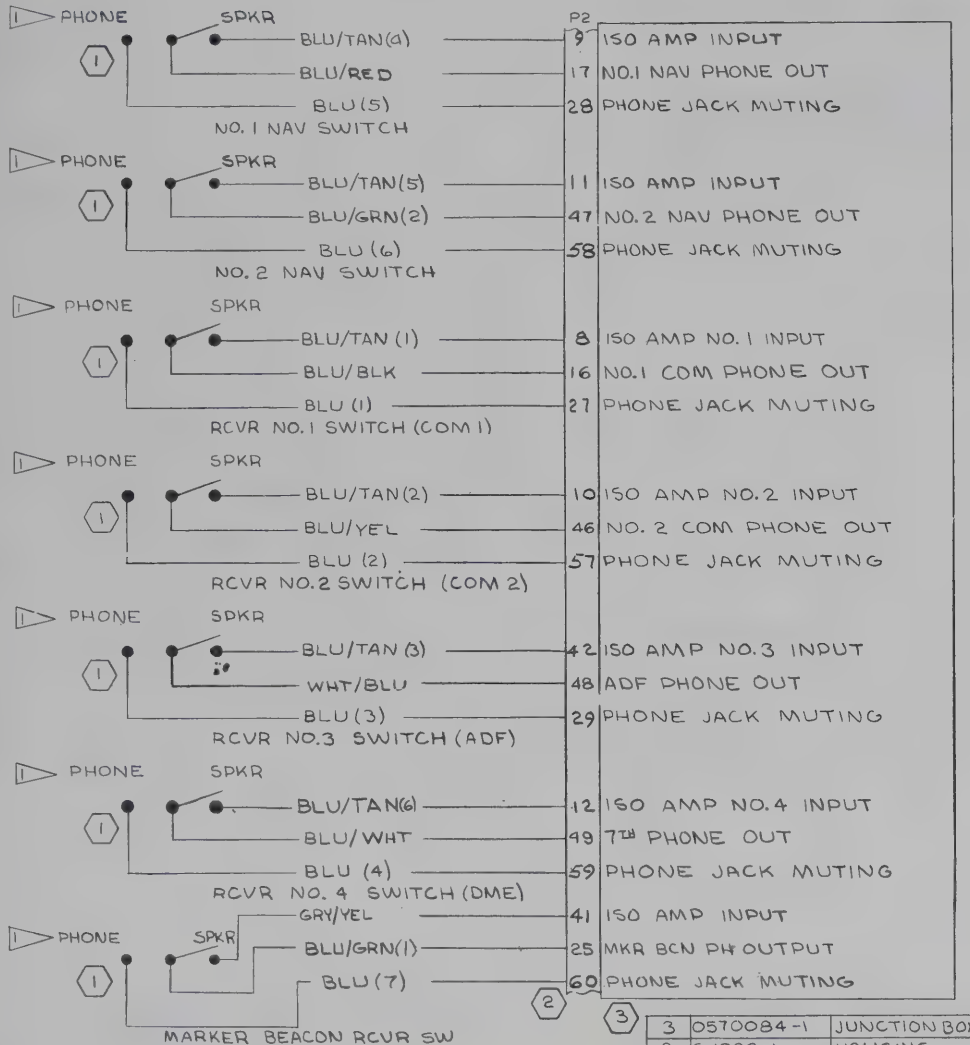

REVISION			
LET	DESCRIPTION	DATE	APPD

W RE CODE NO.	GA	MATERIAL	LG	TERMINALS		SERIALS
BLU(7)	22	-22-6		SOLDER	S-1837-1	
BLU(6)		-22-6				
BLU(5)		-22-6				
BLU/WHT		-22-6-9				
BLU/TAN(5)		-22-6-10				
BLU/TAN(4)		-22-6-10				
BLU/TAN(6)		-22-6-10				
BLU/GRN(2)		-22-6-5				
WHT/BLU		-22-9-6				
GRY/YEL(1)	22	-22-8-4		SOLDER	S-1837-1	
BLU/YEL		-22-6-4				
BLU/GRN(1)		-22-6-5				
BLU/TAN(3)		-22-6-10				
BLU/TAN(2)		-22-6-10				
BLU/TAN(1)		-22-6-10				
BLU/RED		-22-6-2				
BLU/BLK		-22-6-0				
BLU(4)		-22-6				
BLU(3)		-22-6				
BLU(2)		-22-6				
BLU(1)	22	-22-6		SOLDER	S-1837-1	

WIRE TABLE

ITEM NO	PART NO.	DESCRIPTION
3	0570084-1	JUNCTION BOX ASSY
2	S-1838-1	HOUSING
1	S-1695-2	SWITCH

EQUIPMENT TABLE

CES-1000 IS APPLICABLE
VENDOR CODES PER S-1400
CES-XXXX=CESSNA SPEC. NO.
S-XXX OR CMXXXX=CESSNA STD. NO.

SUPERSEDES: P2.6.1

SUPERSEDED BY:

CONTRACT NO:

	NAME	DATE
DESIGN	SIPES VR	6/7/68
GROUP	R. Wild	9-9-68
DRAWN	SCRAPER	8-21-68
CHECK	G. IRVIN	8-30-68
STRESS	R.F. SEIDE	9-3-68
PROJECT		9 11 68
APPD	SWANEY	8-30-68

Cessna AIRCRAFT CO.
COMMERCIAL AIRCRAFT DIV.
5800 E. PAWNEE
WICHITA, KANSAS

TITLE
WIRING DIAGRAM — AUDIO SELECTOR SWITCH

SIZE	CODE IDENT. NO.	DWG NO.
C	71379	1270675

SCALE: NONE | U206 & P206 | PAGE: 2.6.1.1

FORM NO. 80-218A

ED#RR02394 (SR5401)(SR5402) IX

NOTES:

1. OMNI 2 FUNCTION TO BE ON KEYWAY SIDE OF SWITCH

REVISION			
LET	DESCRIPTION	DATE	APPD

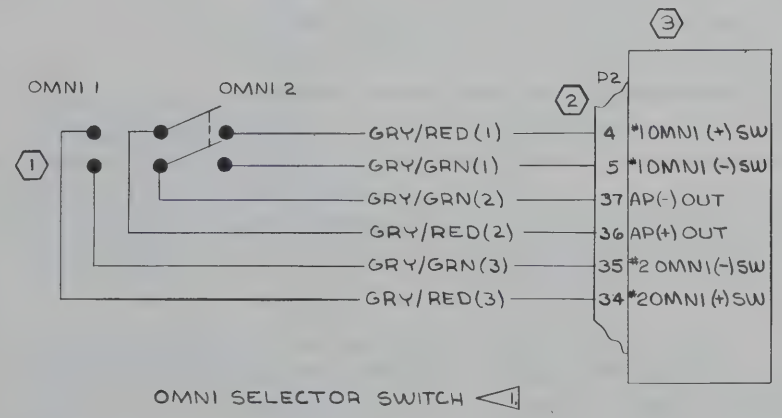

OMNI SELECTOR SWITCH 1.

WIRE CODE NO.	GA	MATERIAL	LG	TERMINALS			SERIALS
GRY/RED(3)	22	-22-8-2		SOLDER	S-1837-1		
GRY/RED(2)	22	-22-8-2					
GRY/RED(1)	22	-22-8-2					
GRY/GRN(3)	22	-22-8-5					
GRY/GRN(2)	22	-22-8-5					
GRY/GRN(1)	22	-22-8-5		SOLDER	S-1837-1		

WIRE TABLE

ITEM NO.	PART NO.	DESCRIPTION
3	0570084-1	JUNCTION BOX ASSY
2	S-1838-1	HOUSING
1	S-1696-1	SWITCH

EQUIPMENT TABLE

CES-1000 IS APPLICABLE
VENDOR CODES PER S-1400
CES-XXXX=CESSNA SPEC. NO.
S-XXX OR CMXXXX=CESSNA STD. NO.

SUPERSEDES: P2.6.2

SUPERSEDED BY:

CONTRACT NO:

	NAME	DATE
DESIGN	SIPES VR	6/10/68
GROUP	H. Wire	9-4-68
DRAWN	SCRAPER	8-21-68
CHECK	G. IRVIN	8-30-68
STRESS	R.F.GEIDE	9-3-68
PROJECT	[illegible]	9-11-68
APPD	SWANEY	8-30-68

Cessna AIRCRAFT CO.
COMMERCIAL AIRCRAFT DIV.
5800 E. PAWNEE
WICHITA, KANSAS

TITLE
WIRING DIAGRAM —
OMNI AUDIO XMTR
SWITCH

SIZE	CODE IDENT. NO.	DWG NO.
C	71379	1270675

SCALE: NONE | U206&P206 | PAGE: 2.6.2.1

FORM NO 80-215A

ED&RR 02394 (SR5401)(SR5402) IX

REVISION			
LET	DESCRIPTION	DATE	APPD

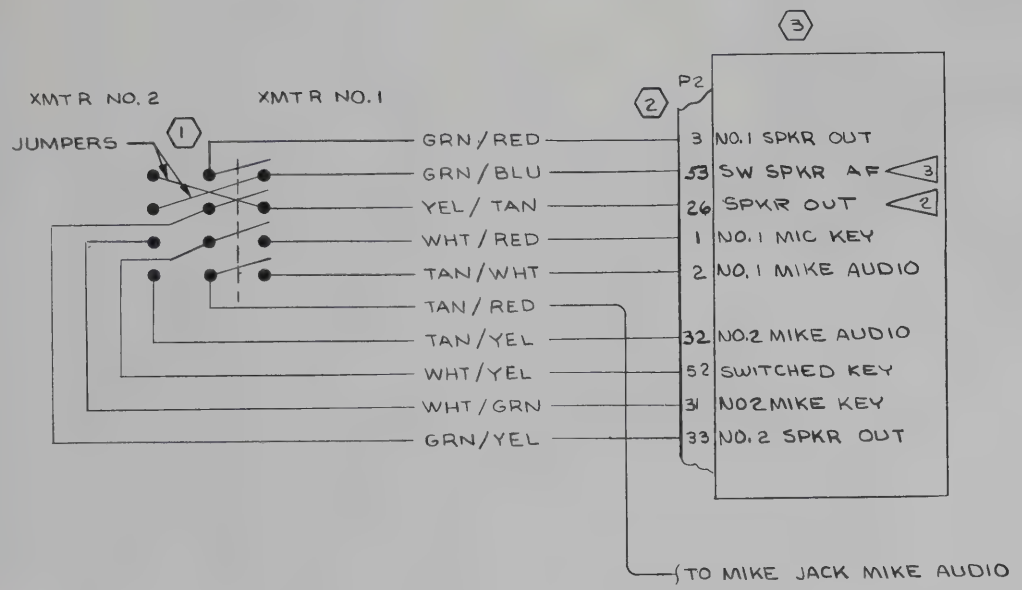

WIRE CODE NO.	GA	MATERIAL	LG	TERMINALS		SERIALS
YEL/TAN	20	20-4-10		SOLDER	S-1837-1	
WHT/YEL	22	22-9-4				
WHT/RED	22	22-9-2				
WHT/GRN	22	22-9-5				
TAN/YEL	22	22-10-4				
TAN/WHT	22	22-10-9			S-1837-1	
TAN/RED	22	22-10-2			SOLDER	
GRN/YEL	20	20-5-4			S-1837-1	
GRN/RED	20	20-5-2			S-1837-1	
GRN/BLU	20	20-5-6		SOLDER	S-1837-1	

WIRE TABLE

NOTES:

1. TRANSMITTER NO. 1 IS ON KEYWAY SIDE OF SWITCH.
2. NO. 26 CONNECTS TO 10Ω RESISTOR ON P. C. BOARD.
3. NO.53 CONNECTS TO RELAY WIPER CONTACT THEN TO SHIP SPKR THRU NORMAL CLOSED CONTACT TO 51. WHEN RELAY IS ACTUATED BY MIC KEY CIRCUIT 53 IS CONNECTED TO 10Ω RESISTOR THRU NORMAL OPEN CONTACT.

ITEM NO.	PART NO.	DESCRIPTION
3	0570084-1	JUNCTION BOX ASSY
2	S-1838-1	HOUSING
1	S-1697-1	SWITCH

EQUIPMENT TABLE

CES-1000 IS APPLICABLE VENDOR CODES PER S-1400
CES-XXXX=CESSNA SPEC. NO.
S-XXX OR CMXXXX=CESSNA STD. NO.

SUPERSEDES: P.2.6.3

SUPERSEDED BY:

CONTRACT NO:

	NAME	DATE
DESIGN	SIPES VR	6/7/68
GROUP	N. Wilson	9-4-68
DRAWN	SCRAPER	8-21-68
CHECK	G.IRVIN	8-30-68
STRESS	R.F.GEIDE	9-3-68
PROJECT	[illegible]	9-11-68
APPD	SWANEY	830-68

Cessna AIRCRAFT CO.
COMMERCIAL AIRCRAFT DIV.
5800 E. PAWNEE
WICHITA, KANSAS

TITLE
WIRING DIAGRAM — TRANSMITTER SELECTOR SWITCH

SIZE	CODE IDENT. NO.	DWG NO.
C	71379	1270675

SCALE: NONE | U206&P206 | PAGE: 2.6.3.1

FORM NO. 80-2158

ED&RR 02394 (SR5401)(SR5402)II

CHG LET	REVISION	BY / DATE	CHK / APPD
A	ADDED 12A TO TITLE, NOTE 2 & TO FIELD, ADDED T12MP-12A TO FIELD. (SR4901)(SR4902)	WCOOK	

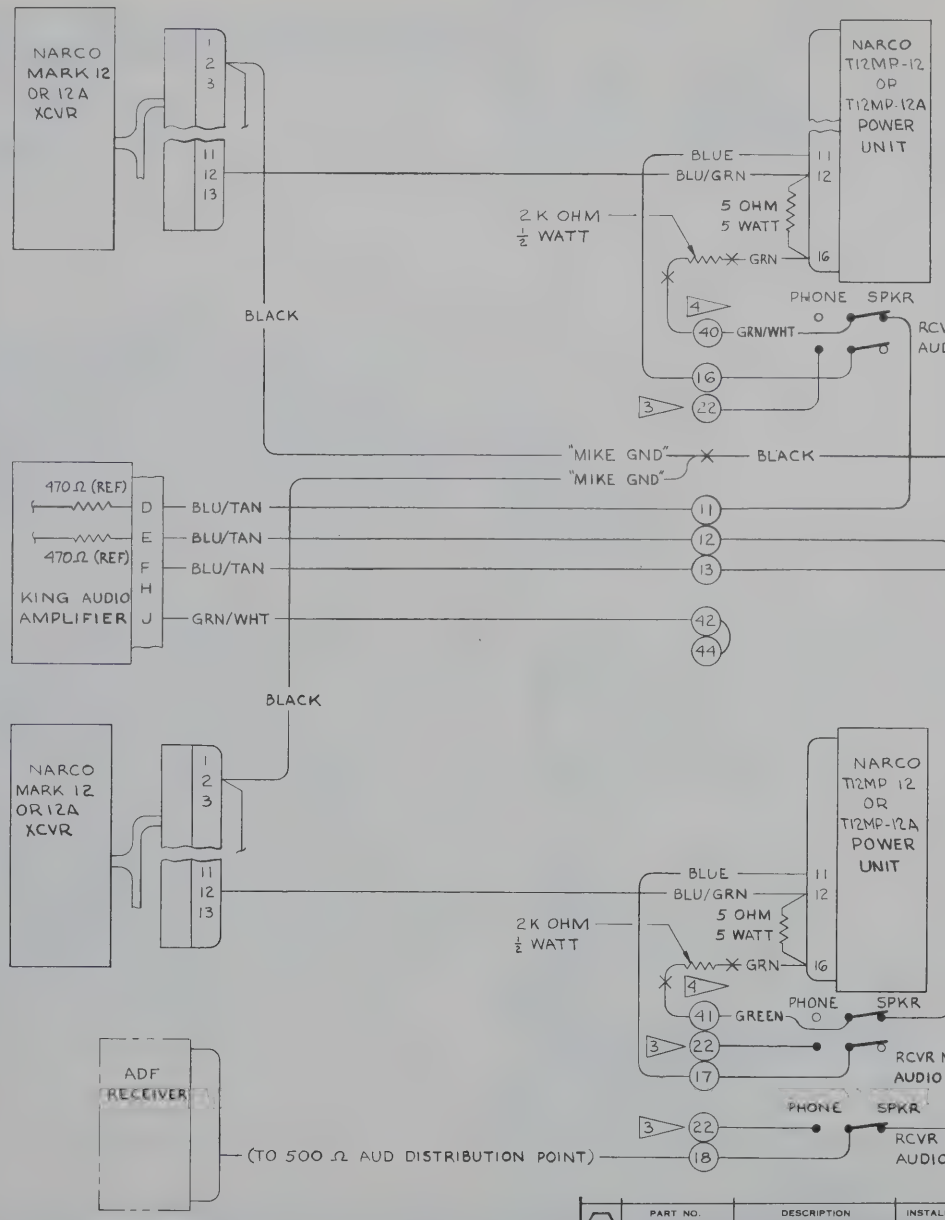

NOTES:

1. ◯ ARE NUMBERS ON TERMINAL BOARD.
2. ON SINGLE MARK 12 OR 12A & ADF INSTL. AUDIO SW NO. 3 WILL NOT BE USED.

3 PHONE TERMINAL MAY BE JUMPERED TO ADJACENT AUDIO SWITCH PHONE TERMINAL INSTEAD OF BEING ROUTED TO TERMINAL BOARD.

4 REMOVE EXISTING WIRES FROM (40) & (41) (GRN/RED & GRN/YEL RESPECTIVELY) & TERMINATE WITH S-1557-1 CAP.

5 THIS IS A REFERENCE PRINT ONLY.

INACTIVE P206-0321 & ON U206-0643 & ON

ITEM NO	PART NO.	DESCRIPTION	INSTALLED ON

EQUIPMENT TABLE

WIRE CODE NO.	GA	MATERIAL	LG	TERMINALS		SERIALS

WIRE TABLE

CESSNA AIRCRAFT CO., COMMERCIAL AIRCRAFT DIVISION, WICHITA, KANSAS

	NAME	DATE
DRAWN	G WOOD	1-26-65
GROUP		
CHECK		1-27-65
PROJ		1-27-65

TITLE: WIRING DIAGRAM— TYPICAL SWITCHING- NARCO MARK 12, 12A & ADF

Cessna

DWG NO: 1270675

SUPERSEDED BY: | SUPERSEDES: | MODEL: P206-U206 | REV: A | PAGE: 2.6.4

FORM NO 80-161A

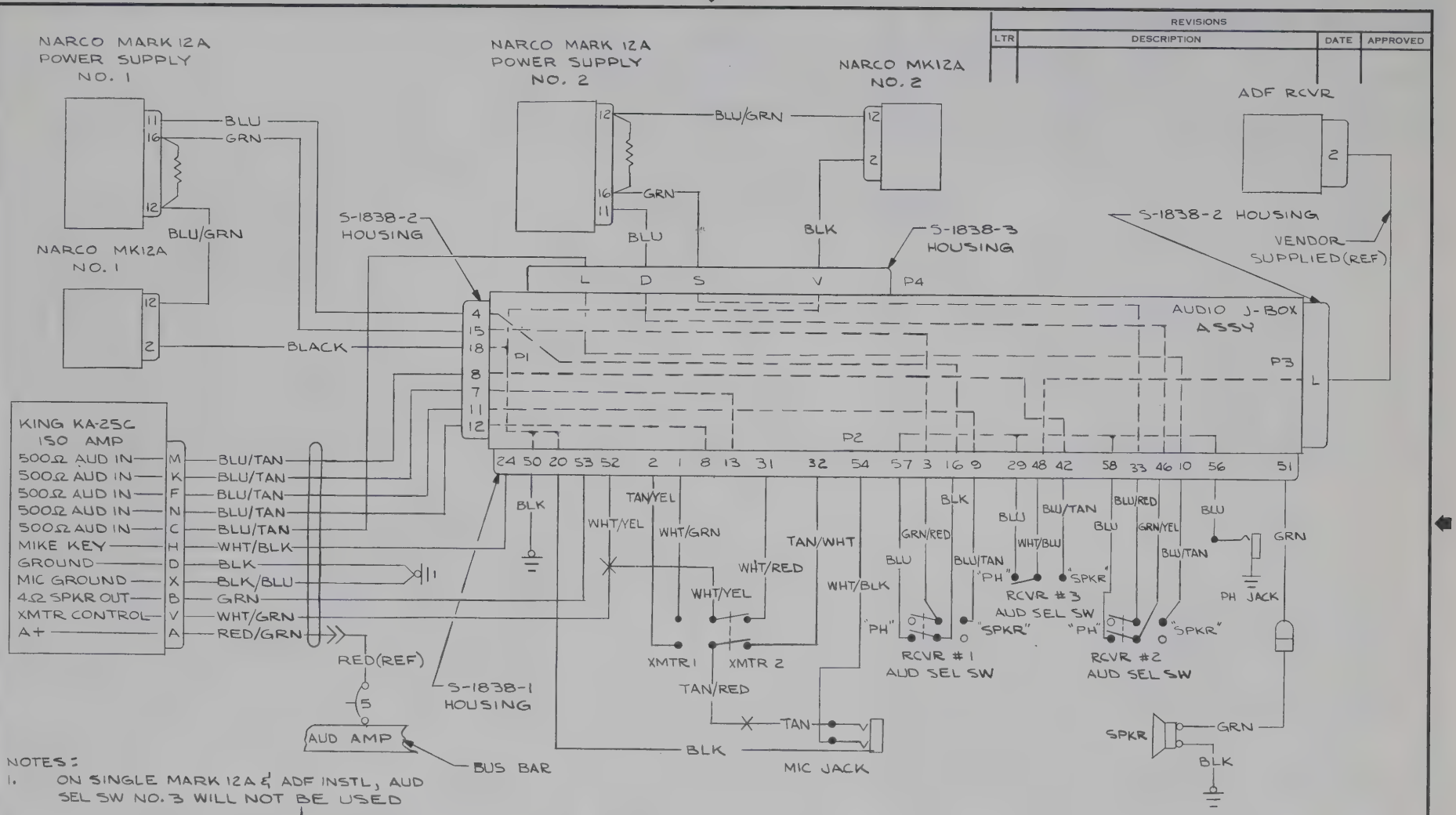

REVISIONS			
LTR	DESCRIPTION	DATE	APPROVED

NOTES:

1. ON SINGLE MARK 12A & ADF INSTL, AUD SEL SW NO. 3 WILL NOT BE USED
2. THIS PAGE IS A REFERENCE PRINT ONLY
3. REFER TO 1270675 PAGE 2.36.3 FOR KING KA-25C ISOLATION AMPLIFIER WIRING DIAGRAM

CONTRACT NO:		
	NAME	DATE
DESIGN	HENSHAW	12-3-68
GROUP	R. Wise	12-5-68
DRAWN	HENSHAW	12-3-68
CHECK	HARRIS	12-3-68
STRESS		
PROJECT	K. Parker	12-9-68
APPD		

SUPERSEDES 2.6.8

Cessna AIRCRAFT CO.
COMMERCIAL AIRCRAFT DIV.
5800 E. PAWNEE
WICHITA, KANSAS

TITLE: WIRING DIAGRAM — TYPICAL SWITCHING, NARCO MARK 12A & ADF

SIZE	CODE IDENT. NO.	DWG NO.
C	71379	1270675

SCALE: NONE | U206 & P206 | PAGE: 2.6.8.1

SER P2060520 & U2061235

FORM NO. 80-216

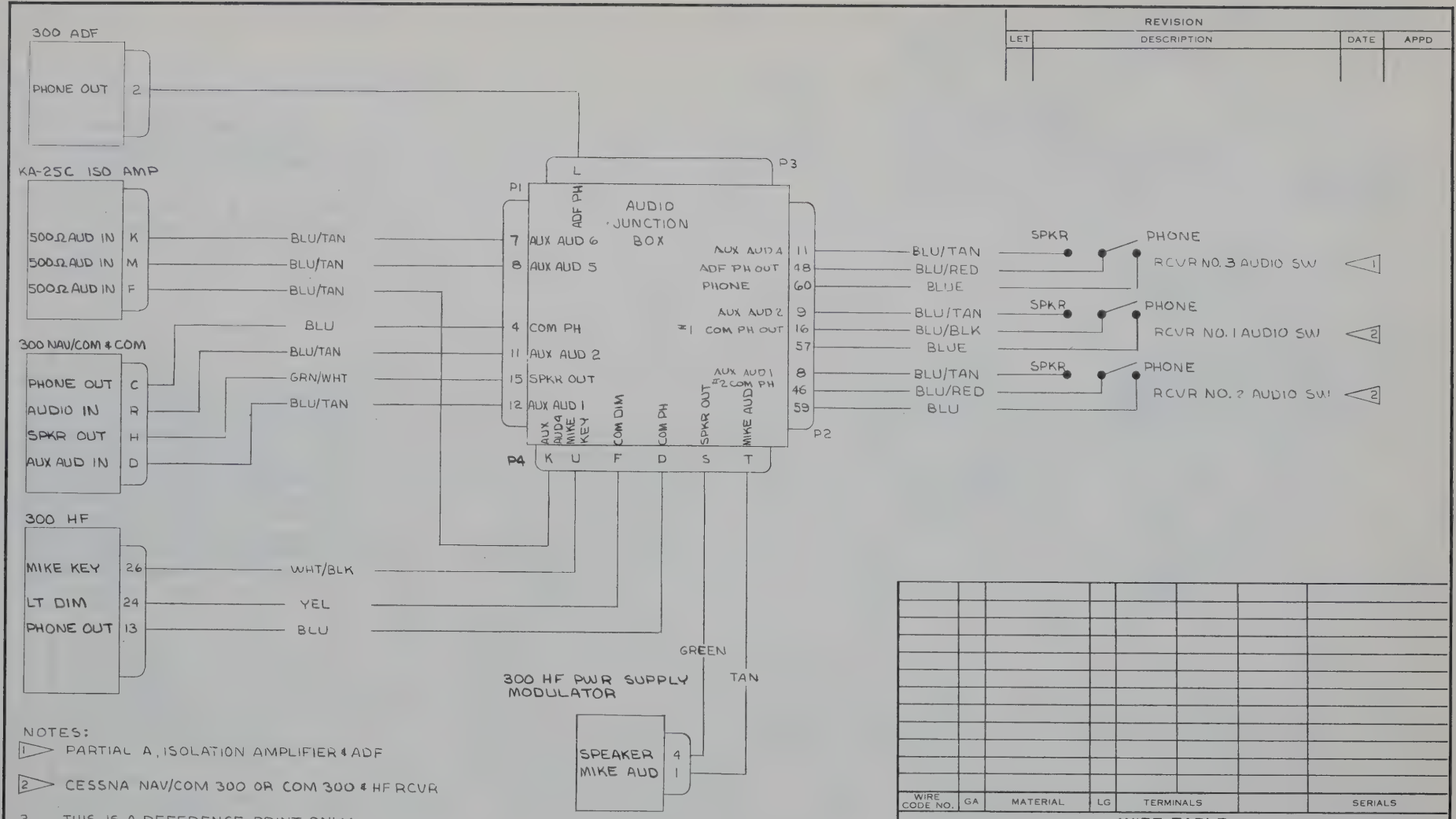

NOTES:

1. PARTIAL A, ISOLATION AMPLIFIER & ADF
2. CESSNA NAV/COM 300 OR COM 300 & HF RCVR
3. THIS IS A REFERENCE PRINT ONLY

REVISION			
LET	DESCRIPTION	DATE	APPD

WIRE CODE NO.	GA	MATERIAL	LG	TERMINALS		SERIALS

WIRE TABLE

ITEM NO.	PART NO.	DESCRIPTION
		EQUIPMENT TABLE

CES-1000 IS APPLICABLE
VENDOR CODES PER S-1400
CES-XXXX=CESSNA SPEC. NO.
S-XXX OR CMXXXX=CESSNA STD. NO.

SUPERSEDES: P.2.6.5

SUPERSEDED BY:

CONTRACT NO:

	NAME	DATE
DESIGN	SIPES VR	6/7/68
GROUP	[illegible]	7-9-68
DRAWN	SCRAPER	8-21-68
CHECK	G. IRVIN	8-30-68
STRESS	R.F. GEIDE	9-3-68
PROJECT	[illegible]	9-10-68
APPD	SWANEY	8306B

Cessna AIRCRAFT CO.
COMMERCIAL AIRCRAFT DIV.
5800 E. PAWNEE
WICHITA, KANSAS

TITLE
WIRING DIAGRAM — TYPICAL SWITCHING - PARTIAL "A" ISO AMP & ADF; HF XCVR & COM 300

SIZE	CODE IDENT. NO.	DWG NO.
C	71379	1270675

SCALE: NONE | U206 & P206 | PAGE 2.6.9

FORM NO 80 213A

ED & RR 02394 (SR5401)(SR5402) IX

NOTES:

1. ON SINGLE CESSNA 300 COMM INSTL, RED/BLK WIRE (PIN K) IS CONNECTED TO RED/WHT WIRE (PIN S) WITH AN S-1370-1 SPLICE, & BLUE WIRE (PIN C) IS CONNECTED TO BLUE/TAN WIRE (PIN R) WITH S-1370-1 SPLICE. WHEN 300 COMM IS INSTL WITH OTHER RADIOS, RED/WHT WIRE CONNECTS TO CKT BKR AS SHOWN. RED/BLK WIRE IS TERMINATED WITH S-1557-1 CAP; BLUE WIRE CONNECTS TO WIPER OF SPKR-PHONE SW & BLUE/TAN WIRE CONNECTS TO SPKR-TERM OF SPKR-PHONE SW.

2. BLACK 16 GA. WIRE IS HALVED, 1/2 SOLDERS TO (PIN A), 1/2 SOLDERS TO GND LUG

REVISIONS			
LTR	DESCRIPTION	DATE	APPROVED

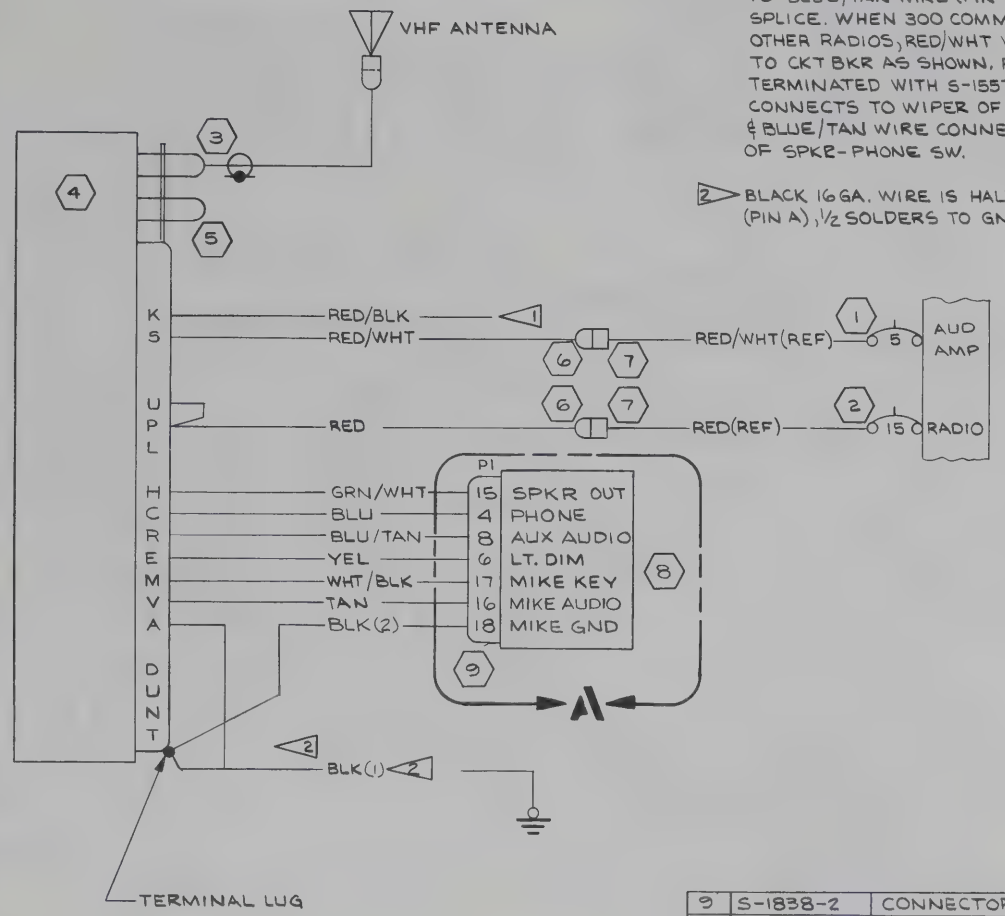

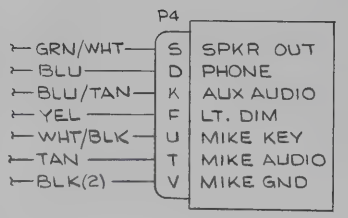

DETAIL A
2ND RADIO INSTL

WIRE CODE NO.	GA	MATERIAL	LG	TERMINALS		SERIALS
YEL	18	-18-4		SOLDER	S-1837-1	
WHT/BLK	22	-22-9-0		SOLDER	S-1837-1	
TAN	22	-22-10		SOLDER	S-1837-1	
RED/WHT	18	-18-2-9		SOLDER	S-1635-1	
RED/BLK	18	-18-2-0		SOLDER	1	
RED	16	-16-2			S-1635-1	
GRN/WHT	20	-20-5-9			S-1837-1	
BLU/TAN	22	-22-6-10			S-1837-1	
BLU	22	-22-6			S-1837-1	
BLK(2)	22	-22-0			S-1837-1	
BLK(1)	16	-16-0		SOLDER	S-1367-2-8	

WIRE TABLE

ITEM NO.	PART NO.	DESCRIPTION
9	S-1838-2	CONNECTOR
8	0570084-1	JUNCTION BOX ASSY
7	S-1637-2	HOUSING-PLUG
6	S-1637-1	HOUSING-CAP
5	29747-0018	CONNECTOR (00781)
4	31390-1514	RCVR/XMTR (ARC TYPE 524A)
3	29753	CONNECTOR (00781)
2	S-1360-15	CIRCUIT BREAKER
1	S-1360-5	CIRCUIT BREAKER

EQUIPMENT TABLE

CONTRACT NO:

	NAME	DATE
DESIGN	SIPES VR	6/7/68
GROUP	R. Wild	9-4-68
DRAWN	SCRAPER	8-26-68
CHECK	G. IRVIN	8-30-68
STRESS	R.F. GEIDE	9-3-68
PROJECT	[illegible]	9-11-68
APPD	SWANEY	8-30-68

Cessna AIRCRAFT CO.
COMMERCIAL AIRCRAFT DIV.
5800 E. PAWNEE
WICHITA, KANSAS

TITLE
WIRING DIAGRAM — CESSNA 300 COMM (ARC TYPE 524A)

SIZE	CODE IDENT. NO.	DWG NO.
C	71379	1270675

SCALE: NONE | U206 & P206 | PAGE: 2.7.3

FORM NO. 80-215

(SR4456)(SR4457)

CHG LET	REVISION	BY / DATE	CHK / APPD
A	ADDED A-263 CHOKE IN A+ LINE. ADDED TO NOTE 2. ADDED 33827	SKH 9-10-65	
B	BY REV: ADD S-1838-3 & 0570084-1 & DETAIL A, S-1838-1, S-1695-2, BLU, BLU/YEL, BLU/TAN WIRES, & NOTE 3 ED & RR 02394 (SR5401) (SR5402) IX	LES 8-19-66	GKI MDS

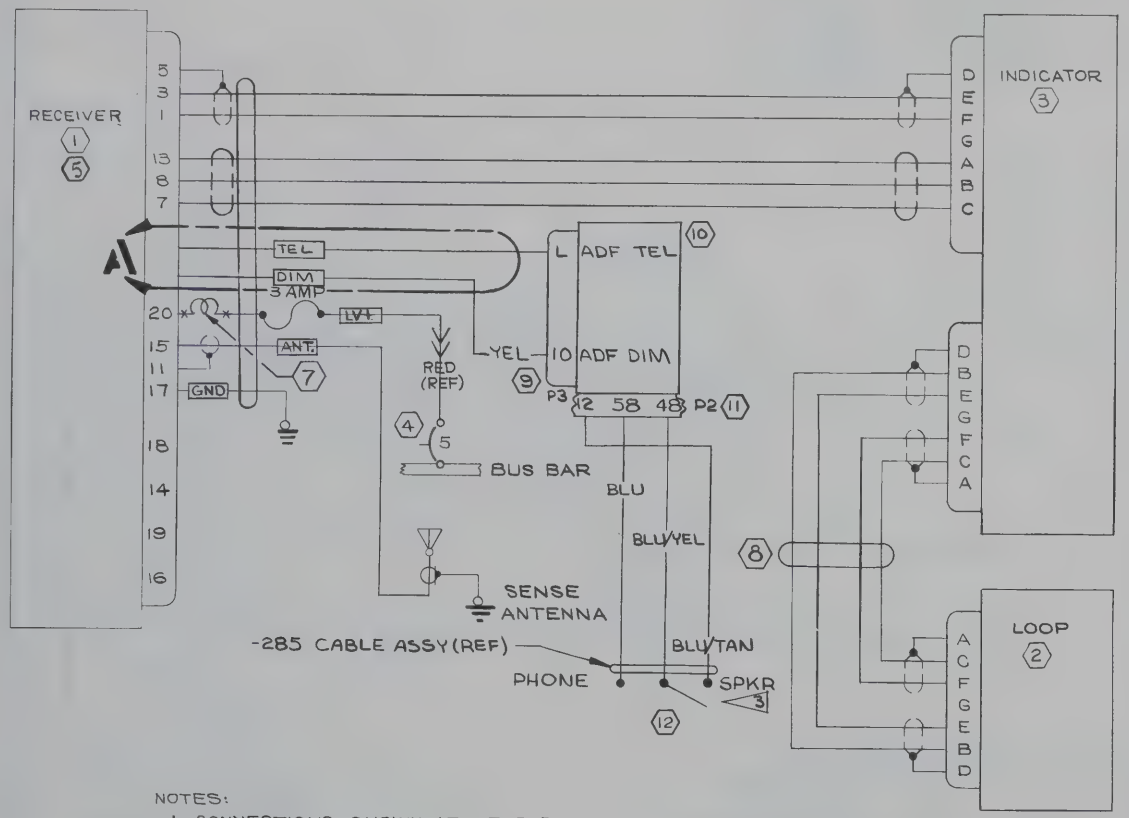

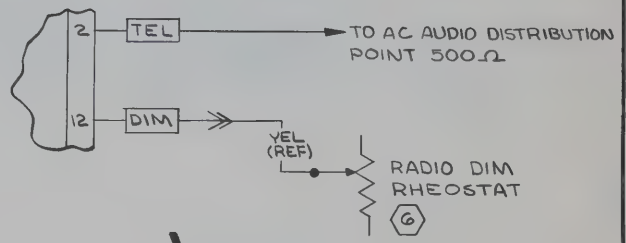

DETAIL A
THRU SER U206-1234 & P206-0519

NOTES:
1. CONNECTIONS SHOWN ARE FOR TOP MOUNTED SENSE & BOTTOM MOUNTED LOOP ANTENNA.
2. ALL WIRES VENDOR FURNISHED WITH RCVR, EXCEPT CHOKE IN CIRCUIT BETWEEN PIN 20 & FUSEHOLDER WHICH MUST BE ADDED ON INSTL IN ACFT.

3 SPKR FUNCTION TO BE ON KEYWAY SIDE OF SWITCH

ITEM NO	PART NO.	DESCRIPTION	INSTALLED ON
12	S-1695-2	SWITCH	
11	S-1838-1	HOUSING	
10	0570084-1	JUNCTION BOX ASSY	
9	S-1838-3	CONNECTOR	
8	33827	LOOP CABLE (ARC)	
7	A-263	CHOKE (CTAT)	
6	R-12½-75-RS34	RHEOSTAT (TRTA)	
5	28340-1400	RCVR (WITH BFO)	(ARC R-521A-18)
4	S-1360-5	CIRCUIT BREAKER	
3	32680-0000	INDICATOR (ARC)	(ARC IN-521B)
2	32880-1000	LOOP (ARC)	(ARC L-521B-10)
1	28340-1500	RCVR (WITHOUT BFO)	(ARC R-521A-15)

EQUIPMENT TABLE

WIRE CODE NO.	GA	MATERIAL	LG	TERMINALS		SERIALS
BLU/TAN	22	-22-6-10		SOLDER	S-1837-1	
BLU/YEL	22	-22-6-4		SOLDER	S-1837-1	
BLU	22	-22-6		SOLDER	S-1837-1	

WIRE TABLE

CESSNA AIRCRAFT CO. COMMERCIAL AIRCRAFT DIVISION, WICHITA, KANSAS

	NAME	DATE
DRAWN	BREEN	8-5-64
GROUP	J. Moody	8-24-64
CHECK	R. Stuck	8-25-64
PROJ	H. Wise	8-24-64

TITLE: WIRING DIAGRAM — CESSNA ADF 300 (ARC TYPE 521B)

Cessna.

DWG NO. 1270675

SUPERSEDED BY	SUPERSEDES 1270625	PAGE 17-14	MODEL P206 & U206	REV B	PAGE 2-12

FORM NO. 80-161

NOTES:

1. ITEMS 6,7,8,9 ARE SUPPLIED AS PART OF KING INSTL. KIT NO. 050-1052-00

2 SPKR FUNCTION ON KEWAY SIDE OF SWITCH

REVISION			
LET	DESCRIPTION	DATE	APPD
A	BY REV: DELETE NOTE 1; PIN 12 WAS PIN 41; C582602-0201 WAS C582602-0101; -236 WAS 030-0020-01; -284 WAS 21-004; -235 WAS 030-24-00 & DELETE S-1695-2 ED & RR 10380	FEB 24-69	VAH MDS LPR HW JDH

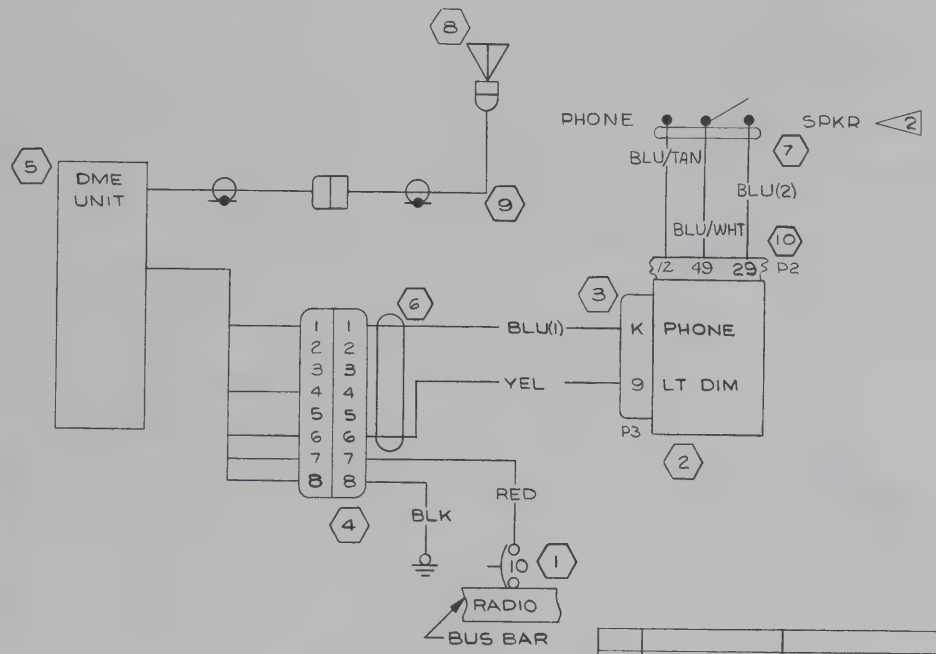

BLU/TAN	22	-22-6-10		SOLDER	S-1837-1		
BLU/WHT	22	-22-6-9		SOLDER	S-1837-1		
BLU(2)	22	-22-6		SOLDER	S-1837-1		
YEL	18	-18-4		SOLDER	S-1837-1		
RED	16	-16-2		SOLDER	S 13672-6		
BLU(1)	22	-22-6		SOLDER	S-1837-1		
BLK	16	-16-0		SOLDER	S-1361-2-8		
WIRE CODE NO.	GA	MATERIAL	LG	TERMINALS			SERIALS

WIRE TABLE

ITEM NO.	PART NO.	DESCRIPTION
10	S-1838-1	HOUSING
9	-235	CABLE ASSY
8	KA-32	ANTENNA
7	-284	CABLE ASSY
6	-236	CABLE ASSY
5	C582602-0201	RCVR-XMTR
4	030-2043-00	CONNECTOR
3	S-1838-3	HOUSING
2	0570084-1	JUNCTION BOX ASSY
1	S-1360-10	CKT BKR

EQUIPMENT TABLE

CES-1000 IS APPLICABLE VENDOR CODES PER S-1400
CES-XXXX=CESSNA SPEC. NO.
S-XXX OR CMXXXX=CESSNA STD. NO.

SUPERSEDES: P.2.20.1

SUPERSEDED BY:

CONTRACT NO:

	NAME	DATE
DESIGN	SIPES VR	6-10-68
GROUP	D. Wise	9-4-68
DRAWN	SCRAPER	8-27-68
CHECK	G. IRVIN	8-30-68
STRESS	R.F GEIDE	9-7-68
PROJECT		
APPD	SWANEY	8-30-68

Cessna AIRCRAFT CO.
COMMERCIAL AIRCRAFT DIV.
5800 E. PAWNEE
WICHITA, KANSAS

TITLE
WIRING DIAGRAM—
CESSNA 300 DME

SIZE	CODE IDENT. NO.	DWG NO.
C	71379	1270675

SCALE: NONE | U206 & P206 | PAGE: 2.20.2

FORM NO 80 215A

ED & RR02394 (SR5401)(SR5402) IX

REVISION			
LET	DESCRIPTION	DATE	APPD

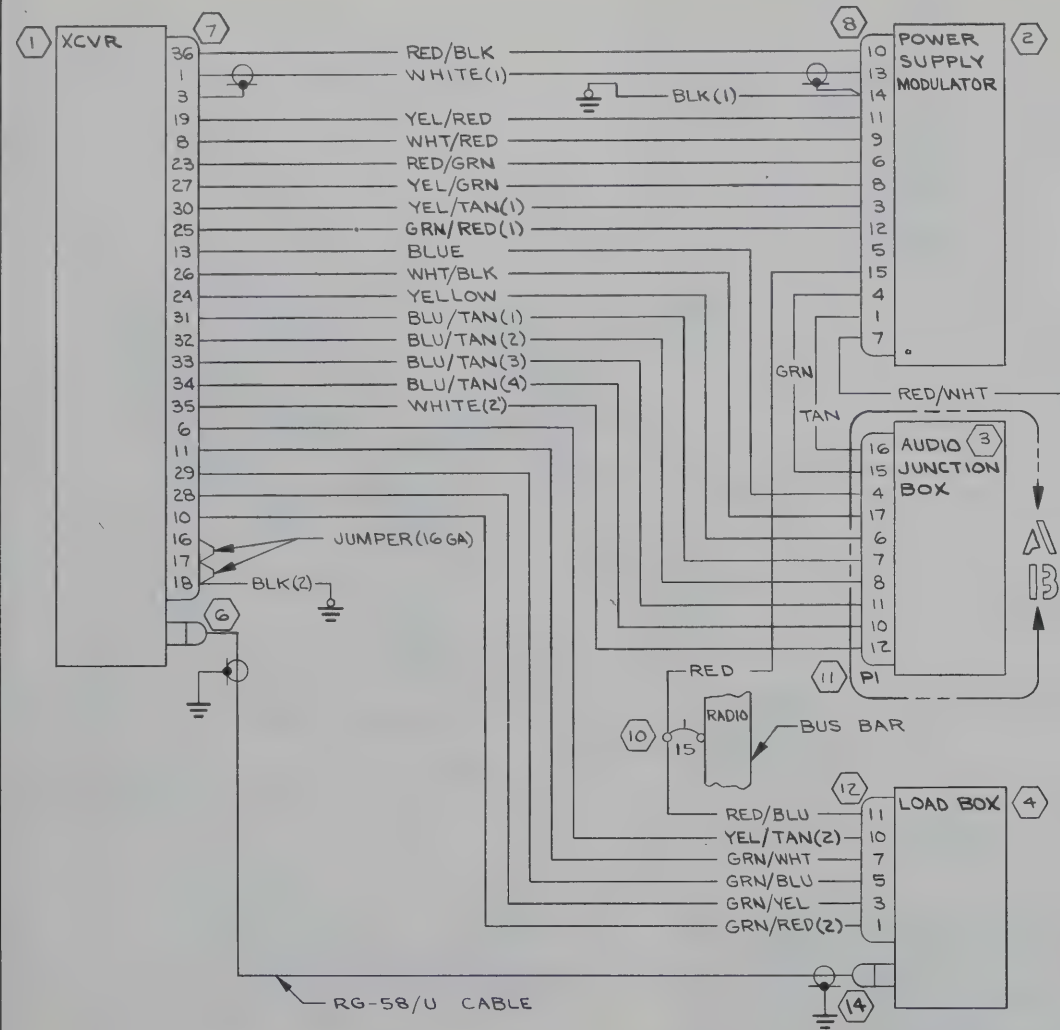

WIRE CODE NO.	GA	MATERIAL	LG	TERMINALS			SERIALS

WIRE TABLE

ITEM NO.	PART NO.	DESCRIPTION

EQUIPMENT TABLE

CES-1000 IS APPLICABLE
VENDOR CODES PER S-1400
CES-XXXX=CESSNA SPEC. NO.
S-XXX OR CMXXXX=CESSNA
STD. NO.

SUPERSEDES:

SUPERSEDED BY:

CONTRACT NO:

	NAME	DATE
DESIGN	SIPES VR	6/73
GROUP	R. Wise	9-4-68
DRAWN	SCRAPER	8-21-68
CHECK	G. IRVIN	8-30-68
STRESS	R.F.GEIDE	9-3-68
PROJECT		9-11-68
APPD	SWANEY	8-30-68

Cessna AIRCRAFT CO.
COMMERCIAL AIRCRAFT DIV.
5800 E. PAWNEE
WICHITA, KANSAS

TITLE
WIRING DIAGRAM —
CESSNA 300 HF

SIZE	CODE IDENT. NO.	DWG NO.
C	71379	1270675

SCALE: NONE | U206&P206 | PAGE: 2.23.3

FORM NO. 80-215A

ED#RR02394 (SR5401)(SR5402) IV

REVISION			
LET	DESCRIPTION	DATE	APPD

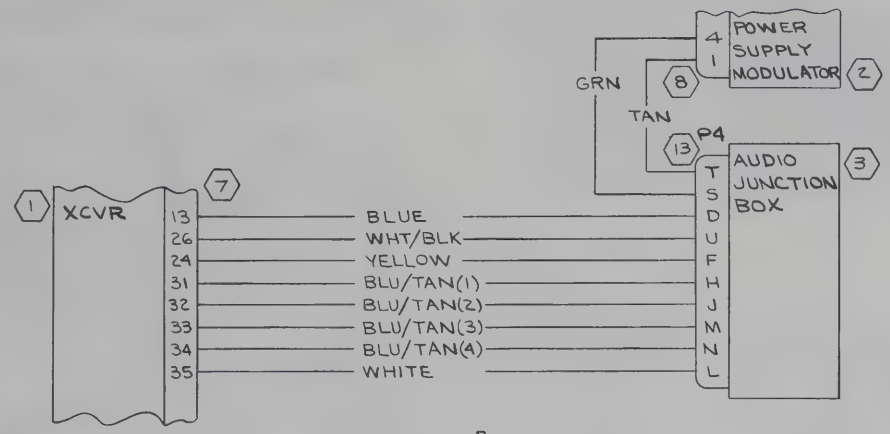

DETAIL A
2ND INSTL

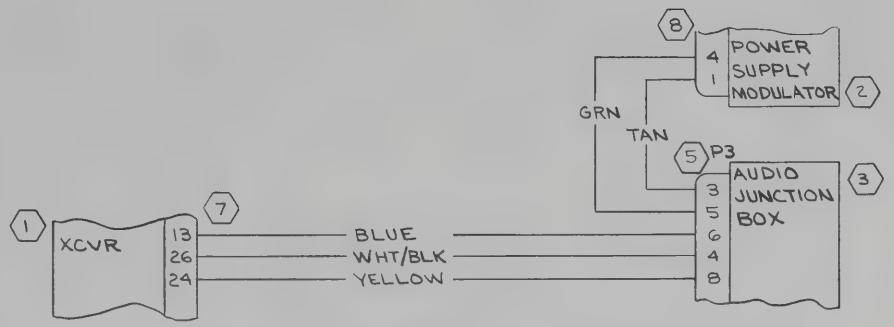

DETAIL B
3RD INSTL
(BLU/TAN WIRES TO BE CAPPED ON 3RD INSTL)

WIRE CODE NO.	GA	MATERIAL	LG	TERMINALS			SERIALS

WIRE TABLE

ITEM NO.	PART NO.	DESCRIPTION	
		EQUIPMENT TABLE	

CES-1000 IS APPLICABLE
VENDOR CODES PER S-1400
CES-XXXX=CESSNA SPEC. NO.
S-XXX OR CMXXXX=CESSNA
STD. NO.

SUPERSEDES:

SUPERSEDED BY:

CONTRACT NO:

Cessna AIRCRAFT CO.
COMMERCIAL AIRCRAFT DIV.
5800 E. PAWNEE
WICHITA, KANSAS

	NAME	DATE
DESIGN	SIPES YR	6/7/68
GROUP	H. Wind	9-4-68
DRAWN	SCRAPER	8-21-68
CHECK	G. IRVIN	8-30-68
STRESS	R.F.GEIDE	9-3-68
PROJECT	[illegible]	9-11 [illegible]
APPD	SWANEY	8-30-68

TITLE
WIRING DIAGRAM —
CESSNA 300 HF

SIZE	CODE IDENT. NO.	DWG NO.
C	71379	1270675

SCALE: NONE | U206 & P206 | PAGE: 2.23.4

FORM NO. 80-215A

ED & RR 02394 (SR5401)(SR5402)IX

REVISION			
LET	DESCRIPTION	DATE	APPD

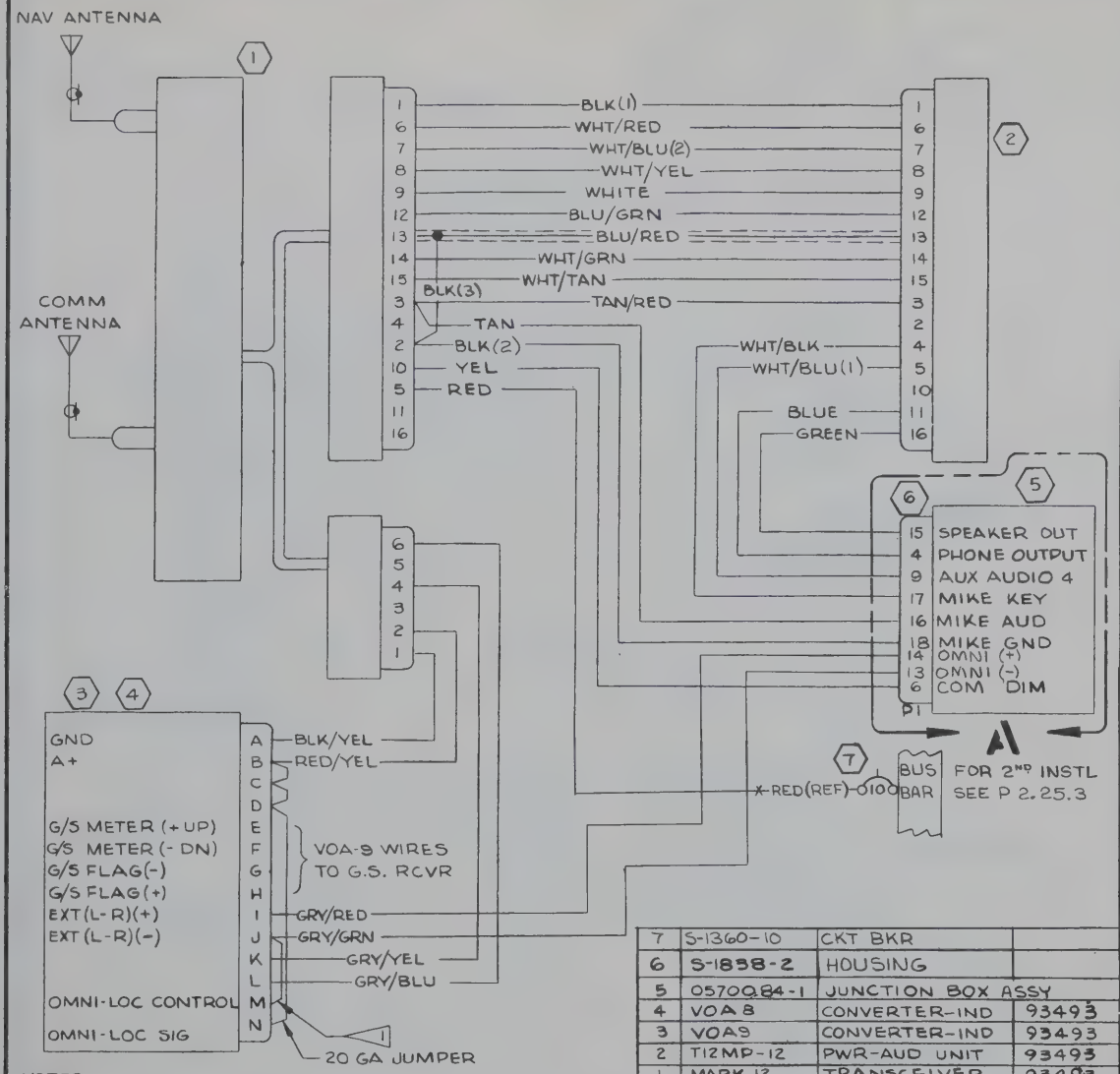

NOTES:

1. THIS JUMPER USED ONLY WHEN DUAL INSTALLATIONS ARE REQUIRED WITH CESSNA NAV-O-MATIC SYSTEMS

ITEM NO.	PART NO.	DESCRIPTION	VENDOR
7	S-1360-10	CKT BKR	
6	S-1838-2	HOUSING	
5	0570084-1	JUNCTION BOX ASSY	
4	VOA8	CONVERTER-IND	93493
3	VOA9	CONVERTER-IND	93493
2	T12MP-12	PWR-AUD UNIT	93493
1	MARK 12	TRANSCEIVER	93493

EQUIPMENT TABLE

CES-1000 IS APPLICABLE VENDOR CODES PER S-1400
CES-XXXX=CESSNA SPEC. NO.
S-XXX OR CMXXXX=CESSNA STD. NO.

SUPERSEDES: R2.25.1

SUPERSEDED BY:

WIRE CODE NO.	GA	MATERIAL	LG	TERMINALS			SERIALS
BLK(3)	22	-22-0		SOLDER	SOLDER		
WHT/BLU(2)	22	-22-9-6		SOLDER	SOLDER		
GREEN	20	-20-5		S-1837-1	SOLDER		
GRY/BLU	22	-22-8-6		SOLDER			
GRY/YEL		-22-8-4		SOLDER			
GRY/GRN		-22-8-5		S-1837-1			
GRY/RED		-22-8-2		S-1837-1			
RED/YEL		-22-2-4		SOLDER			
BLK/YEL		-22-0-4		SOLDER			
BLK(2)		-22-0		S-1837-1			
TAN		-22-10		S-1837-1			
WHT/TAN		-22-9-10		SOLDER			
WHT/GRN	22	-22-9-5		SOLDER			
BLU/RED	22S	-22-6-2		SOLDER			
BLU/GRN	22	-22-6-5		SOLDER			
BLUE		-22-6		S-1837-1			
WHT/YEL		-22-9-4		SOLDER			
WHT/BLU(1)		-22-9-6		S-1837-1			
WHT/RED		-22-9-2		SOLDER			
BLU/WHT		-22-6-9		S-1557-1			
WHT/BLK		-22-9-0		S-1837-1			
TAN/RED	22	-22-10-2		SOLDER			
YELLOW	18	-18-4		S-1837-1			
RED	16	-16-2		S-1370-2			
BLK(1)	16	-16-0		SOLDER			
WHITE	14	-14-9		SOLDER	SOLDER		

WIRE TABLE

CONTRACT NO:

	NAME	DATE
DESIGN	SIPES VR	6/7/68
GROUP	R Wind	9-9-68
DRAWN	SCRAPER	8-27-68
CHECK	G. IRVIN	8-30-68
STRESS	R.F.GEIDE	9-3-68
PROJECT	[illegible]	9 11 68
APPD	SWANSEY	8-30-68

Cessna AIRCRAFT CO.
COMMERCIAL AIRCRAFT DIV.
5800 E. PAWNEE
WICHITA, KANSAS

TITLE
WIRING DIAGRAM — NARCO, MARK 12A WITH VOA-8 & VOA-9

SIZE	CODE IDENT. NO.	DWG NO.
C	71379	1270675

SCALE: NONE | U206&P206 | PAGE: 2.25.2

FORM NO 60 218A

ED-RR 02394 (SR5401)(SR5402)

NOTES:

1. FOR FIRST INSTL SEE PAGE 2.25.2

REVISION			
LET	DESCRIPTION	DATE	APPD

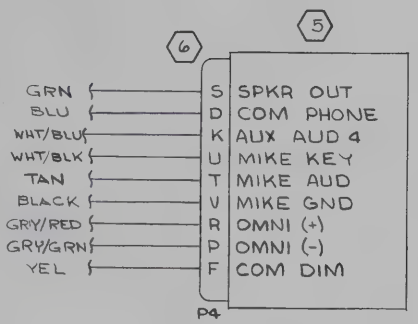

DETAIL A
SECOND INSTL

WIRE CODE NO.	GA	MATERIAL	LG	TERMINALS		SERIALS

WIRE TABLE

ITEM NO.	PART NO.	DESCRIPTION

EQUIPMENT TABLE

CES-1000 IS APPLICABLE
VENDOR CODES PER S-1400
CES-XXXX=CESSNA SPEC. NO.
S-XXX OR CMXXXX=CESSNA
STD. NO.

SUPERSEDES:

SUPERSEDED BY:

CONTRACT NO:

	NAME	DATE
DESIGN	SIPES VR	6/768
GROUP	H. Wind	9-9-68
DRAWN	L. SCRAPER	8-27-68
CHECK	G. IRVIN	8-30-68
STRESS	R.E. GEIDE	9-3-68
PROJECT	P. Parker	9-11-68
APPD	SWANEY	8-30-68

Cessna AIRCRAFT CO.
COMMERCIAL AIRCRAFT DIV.
5800 E. PAWNEE
WICHITA, KANSAS

TITLE
WIRING DIAGRAM —
NARCO MARK 12A WITH
VOA-8 & VOA-9

SIZE	CODE IDENT. NO.	DWG NO.
C	71379	1270675

SCALE: NONE | U206 & P206 | PAGE: 2.25.3

FORM NO. 80-215A

REVISION			
LET	DESCRIPTION	DATE	APPD

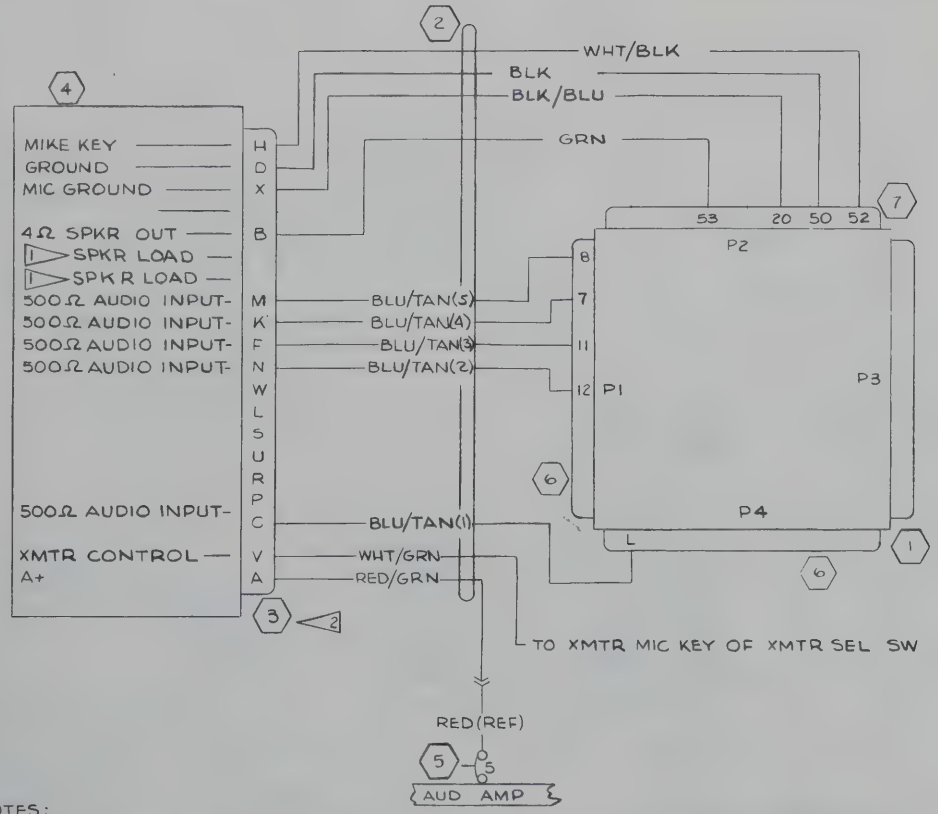

NOTES:
1. THESE CIRCUITS PROVIDE A 4Ω, 5 WATT SPEAKER LOAD WHEN REQ'D BY THE RADIO INSTL
2. CONNECTOR IS FURNISHED WITH KA-25C
3. TERMINAL BLOCK NO.S TO BE STAMPED ON WIRES PER CES 1015

WIRE CODE NO.	GA	MATERIAL	LG	TERMINALS		SERIALS
WHT/GRN	22	-22-9-5		S-1367-1-8	SOLDER	
WHT/BLK	22	-22-9-0		S-1837-1		
RED/GRN	20	-20-2-5		S-341-2		
GRN/YEL	20	-20-5-4		S-1837-1		
GRN/RED	20	-20-5-2				
GRN	20	-20-5				
BLU/TAN(5)	22	-22-6-10				
BLU/TAN(4)	22	-22-6-10				
BLU/TAN(3)	22	-22-6-10				
BLU/TAN(2)	22	-22-6-10				
BLU/TAN(1)	22	-22-6-10				
BLU	22	-22-6				
BLK/BLU	22	-22-0-6				
BLK	18	-18-0		S-1837-1	SOLDER	

WIRE TABLE

ITEM NO	PART NO.	DESCRIPTION	VENDOR
7	S-1838-1	HOUSING	
6	S-1838-2	HOUSING	
5	S-1360-5	CIRCUIT BREAKER	
4	KA-25C	AUDIO AMPLIFIER	(22373)
3	030-2002-00	PLUG	(22373)
2	-288	CABLE ASSY	
1	0570084-1	JUNCTION BOX ASSY	

EQUIPMENT TABLE

CES-1000 IS APPLICABLE VENDOR CODES PER S-1400
CES-XXXX=CESSNA SPEC. NO.
S-XXX OR CMXXXX=CESSNA STD. NO.

SUPERSEDES: P.2.36.1

SUPERSEDED BY:

CONTRACT NO:

	NAME	DATE
DESIGN	GIPES VR	6-7-68
GROUP	R. Wind	9-4-68
DRAWN	SCRAPER	8-26-68
CHECK	G. IRVIN	8-30-68
STRESS	R.F. GEIDE	9-3-68
PROJECT	J. Tasker	9/10/68
APPD	SWANEY	8-30-68

Cessna AIRCRAFT CO.
COMMERCIAL AIRCRAFT DIV.
5800 E PAWNEE
WICHITA, KANSAS

TITLE
WIRING DIAGRAM—
KING KA-25C AUDIO AMPLIFIER

SIZE	CODE IDENT. NO.	DWG NO.
C	71379	1270675

SCALE: NONE | U206 & P206 | PAGE: 2.36.3

FORM NO 80 219A

ED&RR 02394 (SR5401)(SR5402)

CHG LET	REVISION	BY / DATE	CHK / APPD
A	BY REV: IN TITLE & ON FIELD "VOA-9 WAS VOA-5" ED&RR 00944 (SR5595)	MRL 11-21-67	MDS

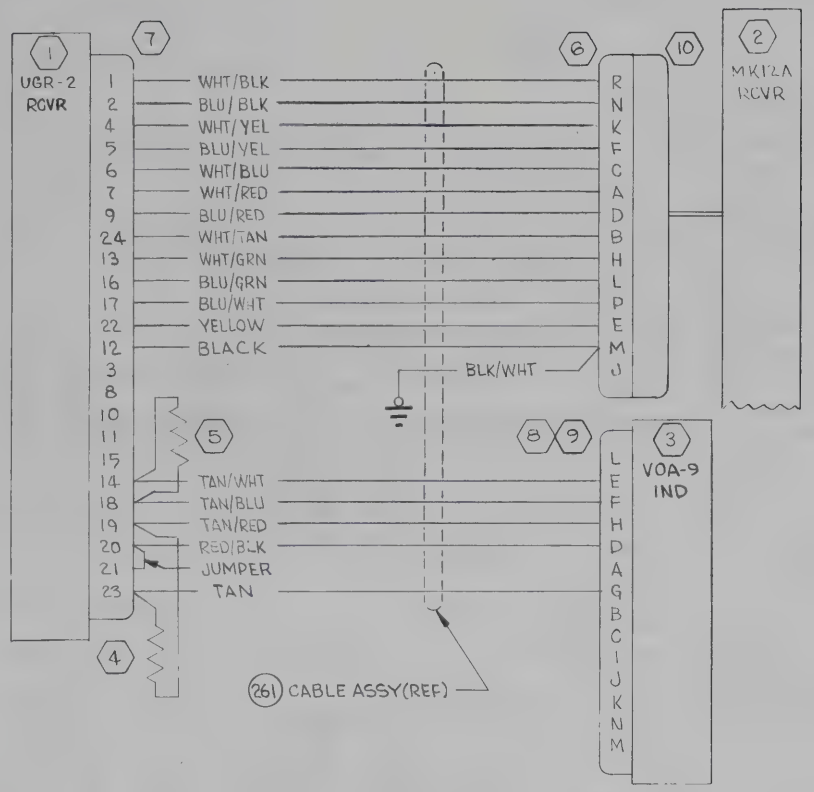

WIRE CODE NO.	GA	MATERIAL	LG	TERMINALS		SERIALS
BLK/WHT	18	18-0-9		SOLDER	S-1367-1-6	
BLACK	18	-18-0			SOLDER	
YELLOW	18	-18-4				
RED/BLK	18	-18-2-0				
TAN/RED	22	-22-10-2				
TAN/BLU	22	-22-10-6				
TAN/WHT	22	-22-10-9				
BLU/WHT	22	-22-6-9				
BLU/GRN	22	-22-6-5				
BLU/RED	22	-22-6-2				
BLU/YEL	22	-22-6-4				
BLU/BLK	22	-22-6-0				
WHT/TAN	22	-22-9-10				
WHT/GRN	22	-22-9-5				
WHT/RED	22	-22-9-2				
WHT/BLU	22	-22-9-6				
WHT/YEL	22	-22-9-4				
WHT/BLK	22	-22-9-0		SOLDER	SOLDER	
TAN		-22-10		SOLDER	SOLDER	

WIRE TABLE

ITEM NO	PART NO.	DESCRIPTION	INSTALLED ON
10	MRA-145	PIG TAIL (93493)	
9	41228-6	CLAMP (93493)	
8	41223-2	PLUG (93493)	
7	41291-101	CONNECTOR (93493)	
6	41247-102	CONNECTOR (93493)	
5	470Ω 1/4 WATT	RESISTOR (93493)	
4	1000Ω 1/4 WATT	RESISTOR (93493)	
3	VOA-9	INDICATOR (93493)	
2	MARK 12A	XCVR (93493)	
1	UGR-2	RCVR (93493)	

EQUIPMENT TABLE

CESSNA AIRCRAFT CO. COMMERCIAL AIRCRAFT DIVISION, WICHITA, KANSAS

	NAME	DATE
DRAWN	W COOK	11-18-67
GROUP	H. Wino	11-27-67
CHECK	SWANEY	11-18-67
PROJ		11-28-67

TITLE: WIRING DIAGRAM — NARCO UGR-2 GLIDESLOPE WITH NARCO MARK 12A & VOA-9

Cessna.

DWG NO 1270675

SUPERSEDED BY	SUPERSEDES	MODEL	REV	PAGE
	1270675, P 2.26.1	P206-U206	A	2.39.1

FORM NO. 80-161

CHG LET	REVISION	BY / DATE	CHK / APPD
A	BY REV: R-543B WAS R-543A & TITLE WAS CESSNA GLIDESLOPE (ARC TYPE R-543A) 36440-0000 WAS 34340 (ED&RR 00952) (SR5632)	RLY 12-7-67	MDS

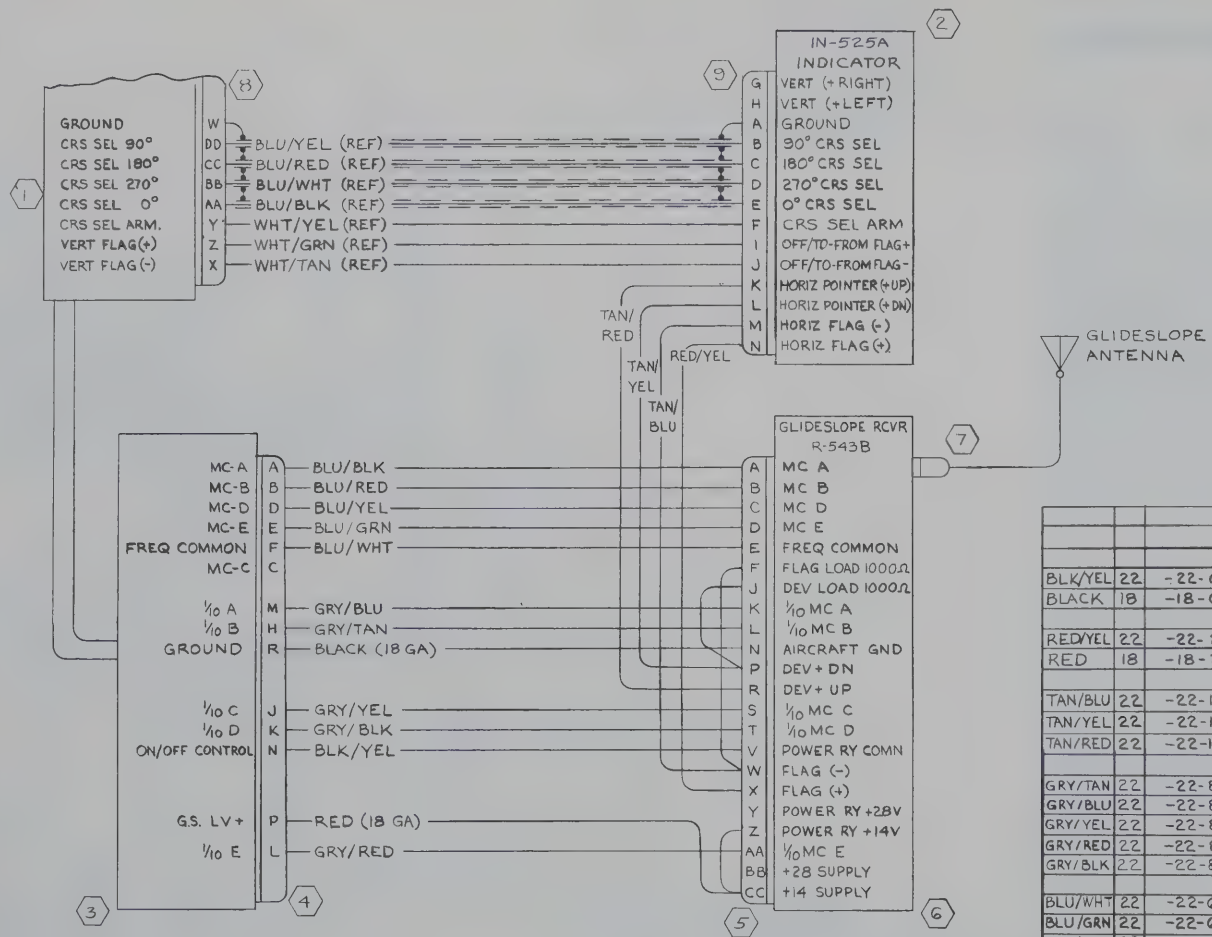

WIRE CODE NO.	GA	MATERIAL	LG	TERMINALS			SERIALS
BLK/YEL	22	-22-0-4		SOLDER	SOLDER		
BLACK	18	-18-0					
RED/YEL	22	-22-2-4					
RED	18	-18-2					
TAN/BLU	22	-22-10-6					
TAN/YEL	22	-22-10-4					
TAN/RED	22	-22-10-2					
GRY/TAN	22	-22-8-10					
GRY/BLU	22	-22-8-6					
GRY/YEL	22	-22-8-4					
GRY/RED	22	-22-8-2					
GRY/BLK	22	-22-8-0					
BLU/WHT	22	-22-6-9					
BLU/GRN	22	-22-6-5					
BLU/YEL	22	-22-6-4					
BLU/RED	22	-22-6-2					
BLU/BLK	22	-22-6-0		SOLDER	SOLDER		

WIRE TABLE

ITEM NO	PART NO.	DESCRIPTION	INSTALLED ON
9	27826	CONNECTOR	
8	29747-0026	CONNECTOR	
7	11337	CONNECTOR	
6	36440-0000	GLIDESLOPE RCVR (ARC TYPE R-543B)	
5	36194	CONNECTOR KIT	
4	36195	CONNECTOR KIT	
3	36300	CABLE HARNESS KIT	
2	32350	INDICATOR (ARC TYPE IN-525A)	
1	36150-1114	RCVR/XMTR (ARC TYPE RT515R-1)	

EQUIPMENT TABLE

CESSNA AIRCRAFT CO., COMMERCIAL AIRCRAFT DIVISION, WICHITA, KANSAS

	NAME	DATE
DRAWN	G WOOD	1-24-67
GROUP	H Wise	1-31-67
CHECK	YAKSHAW	2-1-67
PROJ	McCarter	2-6-67

TITLE: WIRING DIAGRAM— CESSNA 400 GLIDESLOPE (ARC TYPE R-543B)

Cessna.

DWG NO: 1270675

SUPERSEDED BY: | SUPERSEDES: | MODEL: U206, P206, TU206, TP206 | REV: A | PAGE: 2.43.1

FORM NO 80-161A

CHG LET	REVISION	BY / DATE	CHK / APPD
A	BY REV: ADD S-1837-1 TO FIELD ED*RR02394 (SR5401)(SR5402)	LES 8-24-68	GRI MDS RFG

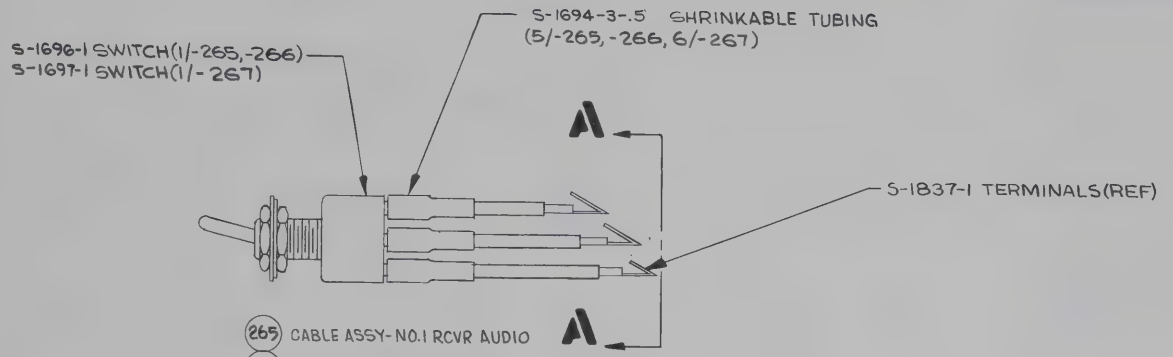

(265) CABLE ASSY-NO.1 RCVR AUDIO
(266) CABLE ASSY-NO.2 RCVR AUDIO
(267) CABLE ASSY-TRANSMITTER SELECTOR

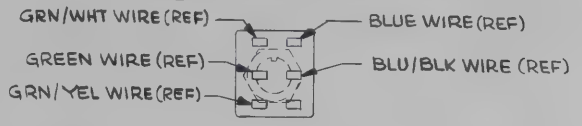

VIEW A-A
(APPLIES TO -265 & -266)
(REFER TO PAGE 2.44.3 FOR WIRING)

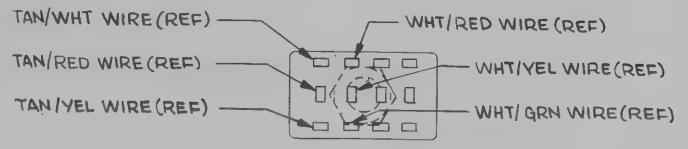

VIEW A-A
(APPLIES TO -267)
(REFER TO PAGE 2.44.3 FOR WIRING)

NO REQD/NEXT ASSY	EFFECTIVE SERIALS	PAGE NO.	PART NUMBER	DESCRIPTION
A/R		2.6.8		WIRING
AIR AIR		2.44.3		WIRING
6 5 5			S-1694-3-.5	SHRINKABLE TUBING
1			S-1697-1	SWITCH
1 1			S-1696-1	SWITCH
SER P2 06-	0321 & SER U206-0643 & ON		-267	ASSY-XMTR SEL SW
SER P2 06-	0321 & SER U206-0643 & ON		-266	ASSY-AUD SEL SW # 2
SER P2 06-	0321 & SER U206-0643 & ON		-265	ASSY-AUD SEL SW # 1
267 266 265				

LIST OF MATERIALS

UNLESS OTHERWISE SPECIFIED
DIMENSIONS ARE IN INCHES
TOLERANCES ARE
DECIMALS: .00 ± .03, .000 ± .010
ANGLES: MACH ± 30', FORMED ± 2°
DO NOT SCALE PRINT
CES 1000-5 APPLICABLE

CESSNA AIRCRAFT CO., COMMERCIAL AIRCRAFT DIVISION, WICHITA, KANSAS

	NAME	DATE
DRAWN	W COOK	11-20-67
GROUP	R. Wiu	12-5-67
CHECK	SWALEY	11-22-67
STRESS	ASHER	12-5-67
PROJ		12-6-67

TITLE: CABLE ASSEMBLY - AUDIO & TRANSMITTER SELECTOR SWITCH NARCO MARK 12A

Cessna.

DWG NO. 1270675

SUPERSEDED BY | SUPERSEDES | SCALE 2:1 | REV A | PAGE 2.44.0

FORM NO. 80-186

CHG LET	REVISION	BY / DATE	CHK / APPD

1. PHONE FUNCTION ON KEYWAY SIDE OF SWITCH
2. TERMINAL BLOCK NUMBERS TO BE STAMPED ON WIRE PER CES-1015. SHRINKABLE TUBING MAY BE USED.
3. WIRE MATERIAL PER S-1460

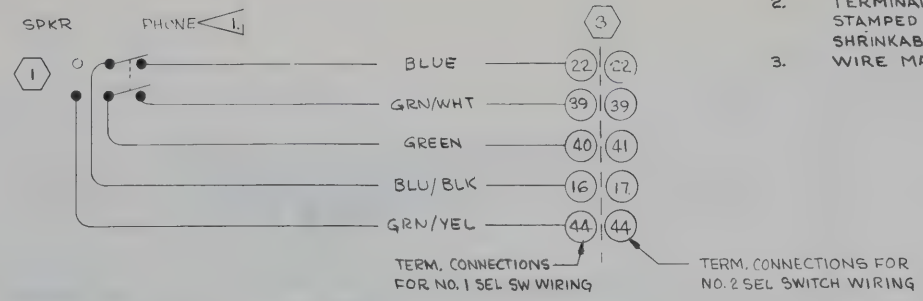

RECEIVER NO. 1 AUDIO SELECTOR SWITCH
RECEIVER NO. 2 AUDIO SELECTOR SWITCH

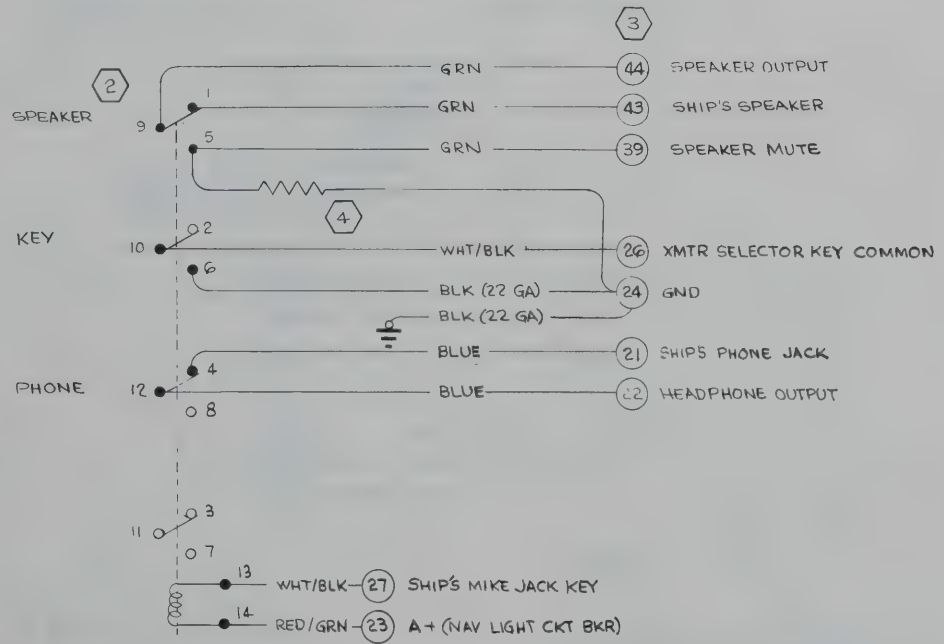

INTERNAL WIRING OF TERMINAL BOARD & MUTING RELAY

INACTAVE
EFF. SERU206-0643 & P206-0321
THRU SERU & TU206-1234) & (P & TP206-0519)
8-23-68 LES
ED & RR 02394
GKI
MDS

WIRE CODE NO.	GA	MATERIAL	LG	TERMINALS			SERIALS
RED/GRN	20	-20-2-5		SOLDER	S-1367-1-8		
WHT/BLK	22	-22-9-0					
BLU/BLK	22	-22-6-0					
WHT/BLK	22	-22-9-0		SOLDER			
BLACK	22	-22-0		S-1367-1-8			
BLACK	22	-22-0		SOLDER			
GRN/WHT	20	-20-5-9					
GRN/YEL	20	-20-5-4					
GREEN	20	-20-5					
GREEN	20	-20-5					
GREEN	20	-20-5					
GREEN	20	-20-5					
BLUE	22	-22-6					
BLUE	22	-22-6					
BLUE	22	-22-6		SOLDER	S-1367-1-8		

WIRE TABLE

ITEM NO	PART NO	DESCRIPTION	INSTALLED ON
4	SOHM 10 WATT AXIAL LEAD	RESISTOR (44655)	
3	0770714-1	TERM. BOARD ASSY	
2	KHP17D11	RELAY (77342)	
1	S-1696-1	SWITCH	

EQUIPMENT TABLE

CESSNA AIRCRAFT CO., COMMERCIAL AIRCRAFT DIVISION, WICHITA, KANSAS

	NAME	DATE
DRAWN	W COOK	11-20-67
GROUP	H. [illegible]	12-5-67
CHECK	SWANEY	11-22-67
PROJ	[illegible]	12-9-67

TITLE: WIRING DIAGRAM— AUDIO SWITCHING - NARCO MARK 12A

Cessna

DWG NO: 1270675

SUPERSEDED BY: P2.44.3 | SUPERSEDES: | MODEL: P206/U206 | REV: | PAGE: 2.44.1

REVISION			
LET	DESCRIPTION	DATE	APPD

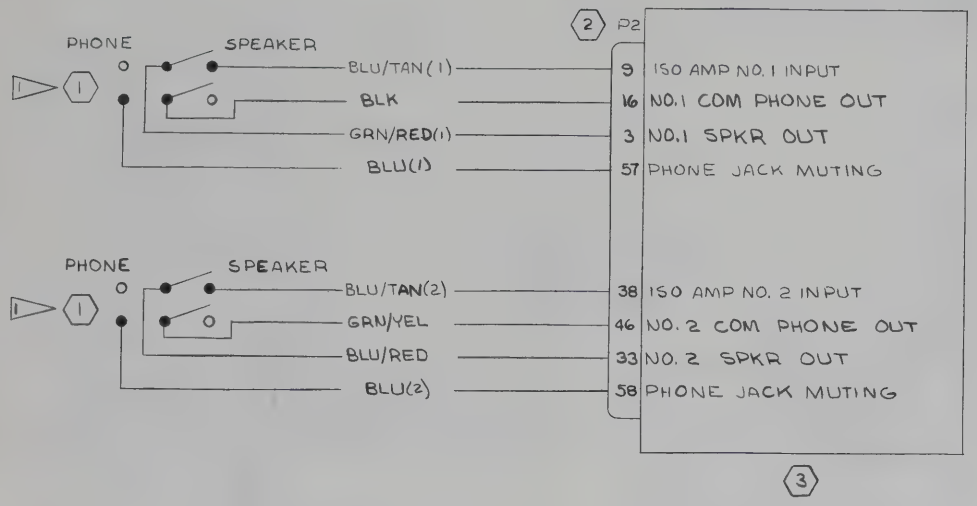

NOTES:

1. SPKR FUNCTION ON KEYWAY SIDE OF SWITCH

BLU(2)	22	-22-6		SOLDER	S-1837-1		
BLU(1)	22	-22-6					
GRN/YEL	22	-22-5-4					
GRN/RED(1)	20	-20-5-2					
BLU/RED	20	-20-6-2					
BLK	22	-22-0					
BLU/TAN(2)	22	-22-6-10					
BLU/TAN(1)	22	-22-6-10		SOLDER	S-1837-1		
WIRE CODE NO.	GA	MATERIAL	LG	TERMINALS			SERIALS

WIRE TABLE

ITEM NO.	PART NO.	DESCRIPTION
3	0570084-1	JUNCTION BOX ASSY
2	S-1838-1	HOUSING
1	S-1696-1	SWITCH

EQUIPMENT TABLE

CES-1000 IS APPLICABLE
VENDOR CODES PER S-1400
CES-XXXX=CESSNA SPEC. NO.
S-XXX OR CMXXXX=CESSNA STD. NO.

SUPERSEDES: P 2.44.1

SUPERSEDED BY:

CONTRACT NO:

	NAME	DATE
DESIGN	SIPES V R	6-7-68
GROUP	R. Wind	9-4-68
DRAWN	SCRAPER	8-29-68
CHECK	G. IRVIN	8-30-68
STRESS	R.F. GEIDE	9-3-68
PROJECT	T Parker	9-10-68
APPD	SWANEY	83068

Cessna AIRCRAFT CO.
COMMERCIAL AIRCRAFT DIV.
5800 E. PAWNEE
WICHITA, KANSAS

TITLE
WIRING DIAGRAM —
AUDIO SWITCHING
NARCO MARK 12A

SIZE	CODE IDENT. NO.	DWG NO.
C	71379	1270675

SCALE: NONE | U206 & D206 | PAGE: 2.44.3

FORM NO 80-215A

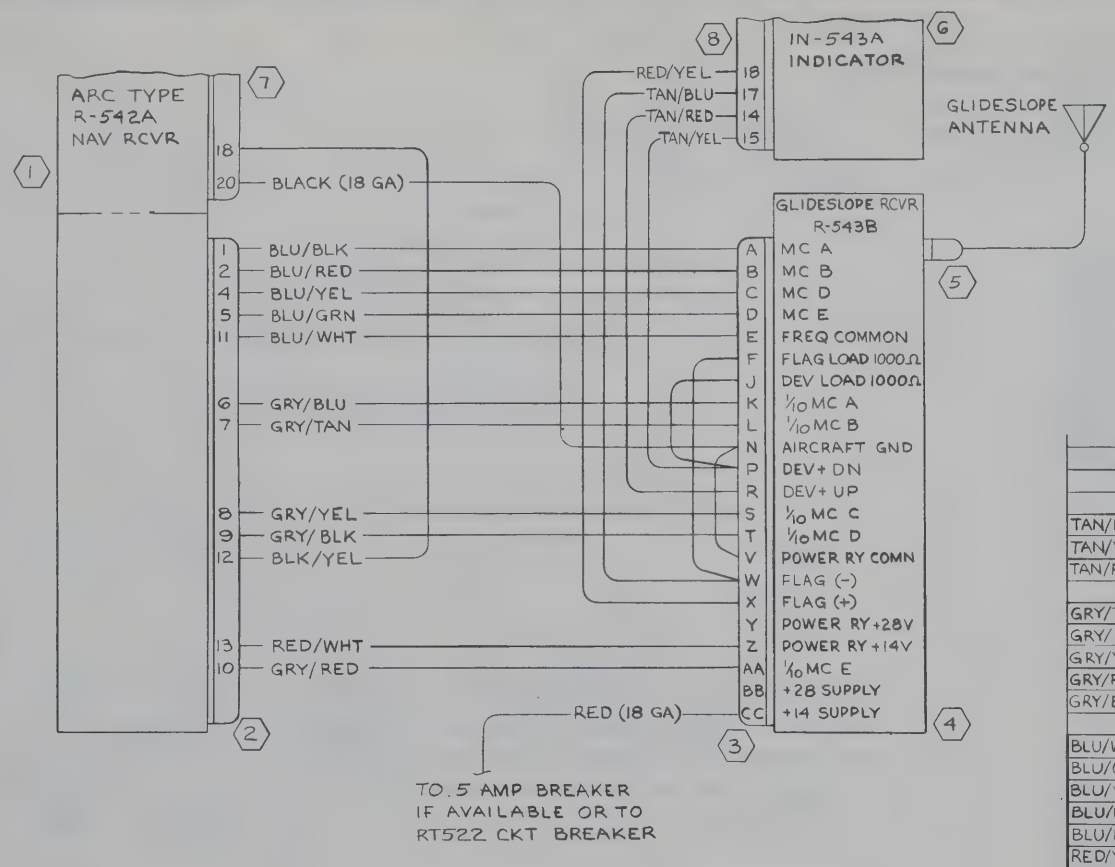

REVISIONS				
LTR	DESCRIPTION		DATE	APPROVED
A	BY REV: R-543B WAS R-543A & TITLE WAS "CESSNA GLIDESLOPE" (ARC TYPE R-543A); 3644'0-0000 WAS 34340 (ED & RR 00952) (SR5632)		RLY 12-7-67	MDS HAA HWJ JCC

WIRE CODE NO.	GA	MATERIAL	LG	TERMINALS		SERIALS
TAN/BLU	22	-22-10-6		SOLDER	SOLDER	
TAN/YEL	22	-22-10-4		SOLDER	SOLDER	
TAN/RED	22	-22-10-2		SOLDER	SOLDER	
GRY/TAN	22	-22-8-10		SOLDER	SOLDER	
GRY/BLU	22	-22-8-6		↕	↕	
GRY/YEL	22	-22-8-4		↕	↕	
GRY/RED	22	-22-8-2		↕	↕	
GRY/BLK	22	-22-8-0		SOLDER	SOLDER	
BLU/WHT	22	-22-6-9		SOLDER	SOLDER	
BLU/GRN	22	-22-6-5		↕	↕	
BLU/YEL	22	-22-6-4		↕	↕	
BLU/RED	22	-22-6-2		↕	↕	
BLU/BLK	22	-22-6-0		↕	↕	
RED/YEL	22	-22-2-4		↕	↕	
RED/WHT		-22-2-9		SOLDER	↕	
RED	18	-18-2		S-1367-1-8	SOLDER	
BLK/YEL	22	-22-0-4		SOLDER	SOLDER	
BLACK	18	-18-0		SOLDER	SOLDER	

WIRE TABLE

ITEM NO.	PART NO.	DESCRIPTION
8	34294-0425	CONNECTOR
7	35693-0004	CONNECTOR
6	34290	INDICATOR (ARC IN-543)
5	11337	CONNECTOR
4	36440-0000	G/S RCVR (ARC TYPE R-543B)
3	36194	CONNECTOR KIT (00781)
2	35548-0225	CONNECTOR (00781)
1	33560	NAV RCVR (ARC R-542)

EQUIPMENT TABLE

CONTRACT NO:

	NAME	DATE
DESIGN	G WOOD	1-9-67
GROUP	H. Wise	1-31-67
DRAWN	G WOOD	1-9-67
CHECK	YAKSHAW	2-1-67
STRESS	ASHER	2-1-67
PROJECT	McCarter	2-6-67
APPD		

Cessna AIRCRAFT CO.
COMMERCIAL AIRCRAFT DIV.
5800 E. PAWNEE
WICHITA, KANSAS

TITLE
WIRING DIAGRAM —
CESSNA 400
GLIDESLOPE
(ARC TYPE R-543B)

SIZE	CODE IDENT. NO.	DWG NO.
C	71379	1270675

SCALE: NONE | PAGE: 2.45.1

FORM NO 80-215

REVISION			
LET	DESCRIPTION	DATE	APPD

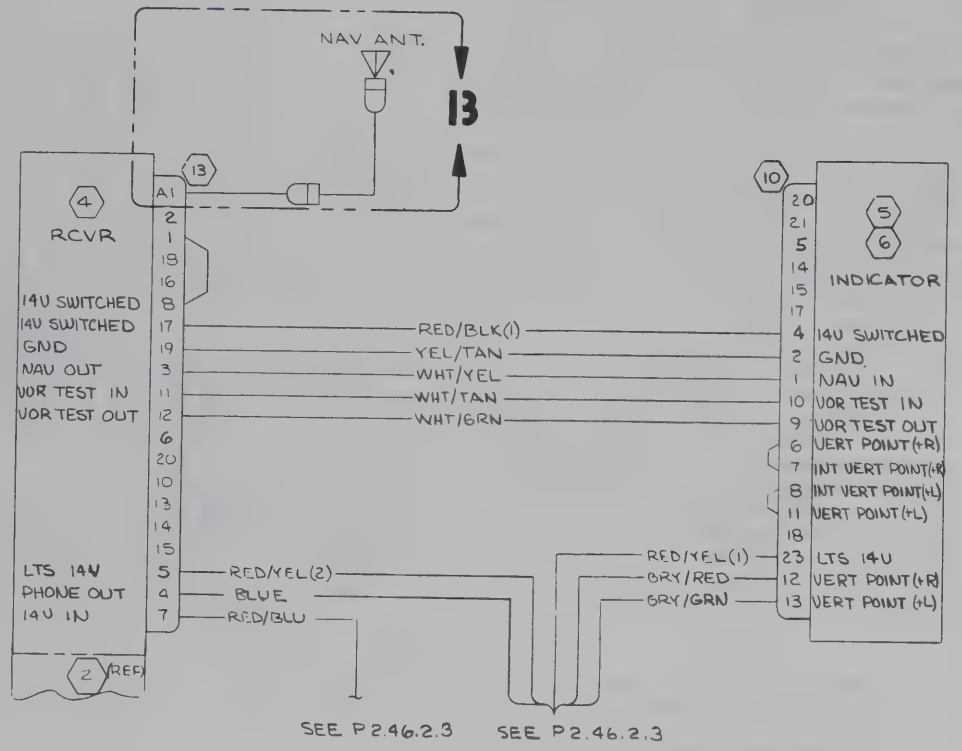

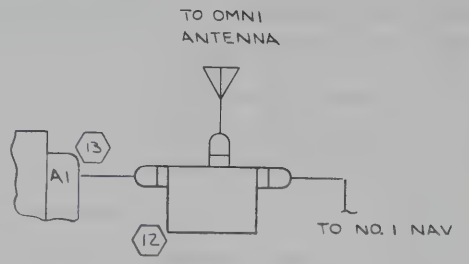

DETAIL 13
2ND INSTL

WIRE CODE NO.	GA	MATERIAL	LG	TERMINALS		SERIALS

WIRE TABLE

ITEM NO	PART NO.	DESCRIPTION

EQUIPMENT TABLE

CES-1000 IS APPLICABLE
VENDOR CODES PER S-1400
CES-XXXX=CESSNA SPEC. NO.
S-XXX OR CMXXXX=CESSNA
STD. NO.

SUPERSEDES: P.2.46.1.1

SUPERSEDED BY:

CONTRACT NO:

	NAME	DATE
DESIGN	SIPES VR	6/7/68
GROUP	H. Wied	9-4-68
DRAWN	SCRAPER	8-B68
CHECK	G. IRVIN	8-30-68
STRESS	R.F. GEIDE	9-3-68
PROJECT		10-6-68
APPD	SWANEY	8-30-68

Cessna AIRCRAFT CO.
COMMERCIAL AIRCRAFT DIV.
5800 E. PAWNEE
WICHITA, KANSAS

TITLE
WIRING DIAGRAM —
CESSNA 400 NAV/COM
(ARC TYPE RT 522A & RT 532A)

SIZE	CODE IDENT. NO.	DWG NO.
C	71379	1270675

SCALE: NONE | U206&P206 | PAGE: 2.46.2.2

FORM NO 80-215A

REVISION			
LET	DESCRIPTION	DATE	APPD

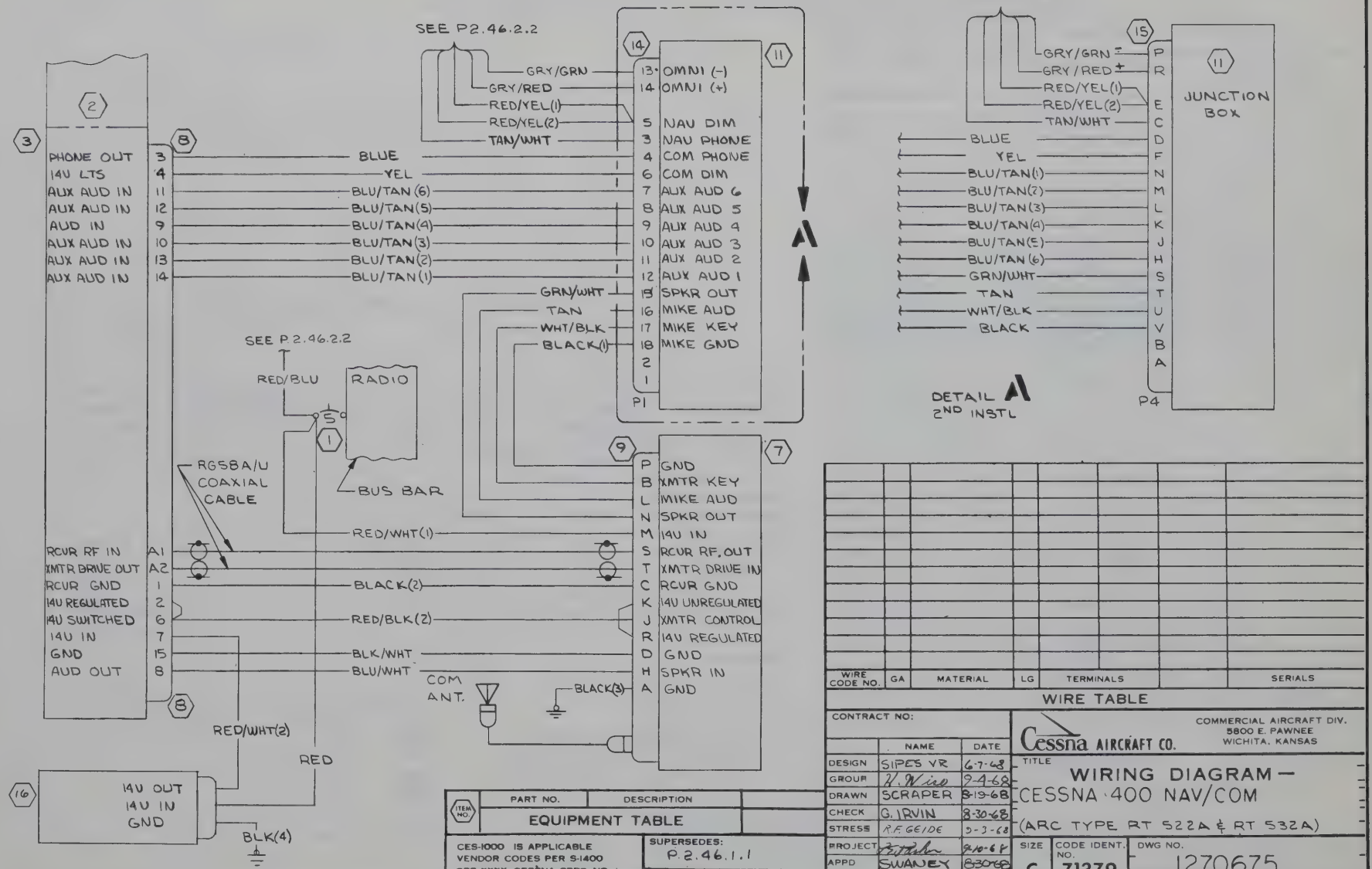

WIRE CODE NO.	GA	MATERIAL	LG	TERMINALS		SERIALS

WIRE TABLE

ITEM NO.	PART NO.	DESCRIPTION

EQUIPMENT TABLE

CES-1000 IS APPLICABLE VENDOR CODES PER S-1400
CES-XXXX=CESSNA SPEC. NO.
S-XXX OR CMXXXX=CESSNA STD. NO.

SUPERSEDES: P.2.46.1.1

SUPERSEDED BY:

CONTRACT NO:	NAME	DATE
DESIGN	SIPES VR	6-7-68
GROUP	V. Wine	9-4-68
DRAWN	SCRAPER	8-19-68
CHECK	G. IRVIN	8-30-68
STRESS	R.F. GEIDE	9-3-68
PROJECT		9-10-68
APPD	SWANEY	9-30-68

Cessna AIRCRAFT CO.
COMMERCIAL AIRCRAFT DIV.
5800 E. PAWNEE
WICHITA, KANSAS

TITLE
WIRING DIAGRAM —
CESSNA 400 NAV/COM
(ARC TYPE RT 522A & RT 532A)

SIZE	CODE IDENT. NO.	DWG NO.
C	71379	1270675

SCALE: NONE | U206 & P206 | PAGE 2.46.2.3

FORM NO 80-215A

ED# RR02394 (SR5401)(SR5402)II

REVISION			
LET	DESCRIPTION	DATE	APPD

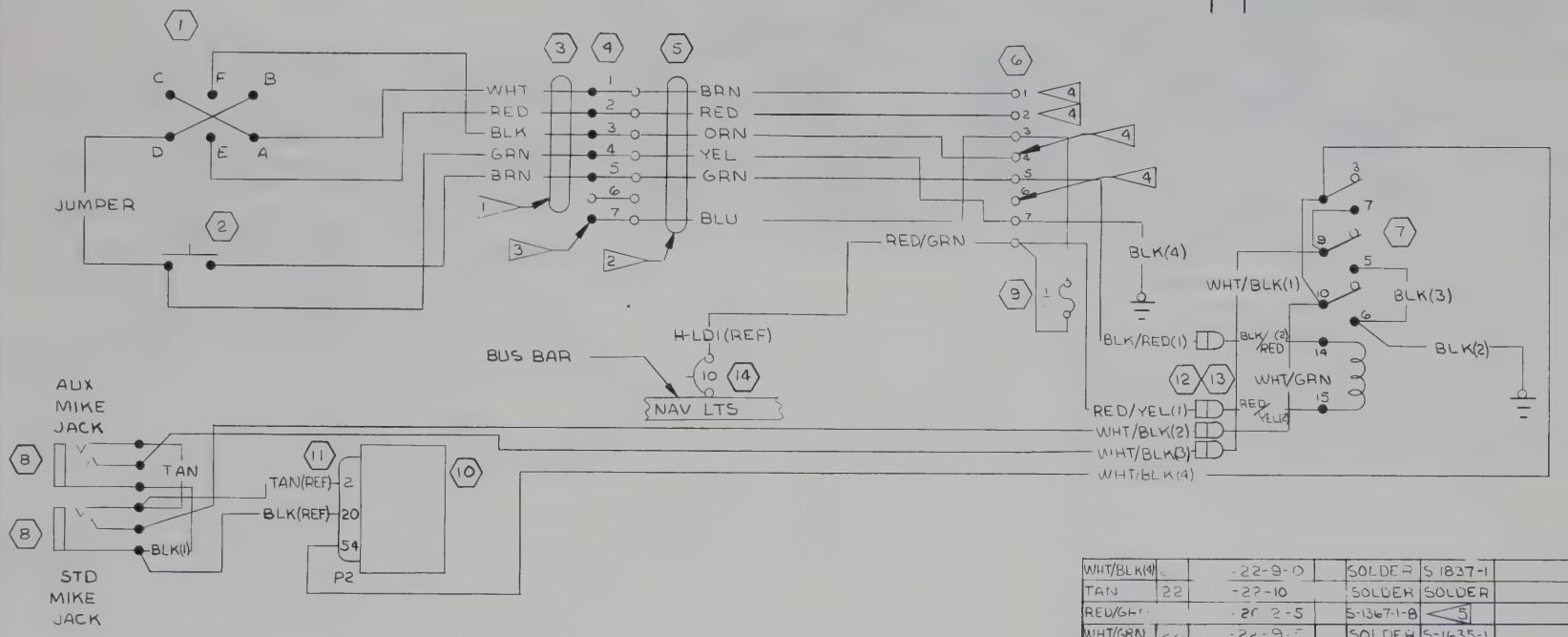

NOTES:

1. BOTH ENDS OF 8445 CABLE TO BE SOLDERED
2. BOTH ENDS OF SF-1030-BX CABLE TO BE TERMINATED WITH 320733 TERMINALS (00779)
3. POWER SOURCE FOR MAP LIGHT REFER TO 1270625 PAGE 11.11 FOR SCHEMATIC OF ETCHED CKT BOARD
4. REFER TO 1270625 PAGE 14.4 FOR PITCH TRIM MOTOR WIRING DIAGRAM
5. PART NO. IS 329636, VENDOR CODE IS 00779

ITEM NO	PART NO.	DESCRIPTION	VENDOR
14	S-1360-10	CKT BKR	
13	S-1637-1	HOUSING-CAP	
12	S-1637-2	HOUSING-PLUG	
11	S-1838-1	HOUSING	
10	0570084-1	JUNCTION BOX ASSY	
9	1570141-1	FUSE ASSY	
8	S-1102-1	JACK	
7	S-1813-2	RELAY	
6	8-171	TERM BLOCK	(71785)
5	SF-1030-BX	CABLE	(08261)
4	1570142-2	CIRCUIT BOARD ASSY	
3	8445	CABLE	(70903)
2	39-1	SWITCH	(81073)
1	26006	SWITCH	(81579)

EQUIPMENT TABLE

CES-1000 IS APPLICABLE
VENDOR CODES PER S-1400
CES-XXXX=CESSNA SPEC. NO.
S-XXX OR CMXXXX=CESSNA STD. NO.

SUPERSEDES: P. 2.48

SUPERSEDED BY:

WIRE CODE NO	GA	MATERIAL	LG	TERMINALS		SERIALS
WHT/BLK(4)	22	-22-9-0		SOLDER	S 1837-1	
TAN	22	-22-10		SOLDER	SOLDER	
RED/GRN	22	-20 2-5		S-1367-1-8	5	
WHT/GRN	22	-22-9-2		SOLDER	S-1635-1	
WHT/BLK(1)	22	-22-0-2		SOLDER	S-1635-1	
BLK/RED(1)	22	-22-0-2		5	S-1636-1	
RED/YEL(2)	22	-22 2-4		SOLDER	S-1635-1	
RED/YEL(1)	22	22-2-4		S 1367-1-8	S-1636-1	
WHT/BLK(3)	22	-22-9-0		S-1636-1	SOLDER	
WHT/BLK(2)	22	-22-9-0		S-1636-1	SOLDER	
WHT/BLK(1)	22	-22-9-0		SOLDER	S-1635-1	
BLK(4)	22	-22-0		5	S-1367-1-8	
BLK(3)	22	-22-0		SOLDER	SOLDER	
BLK(2)	22	-22-0		SOLDER	S-1367-1-8	
BLK(1)	22	-22-0		SOLDER	SOLDER	

WIRE TABLE

CONTRACT NO

	NAME	DATE
DESIGN	SIPES VR	6/7/68
GROUP	R. Wind	9-4-68
DRAWN	SCRAPER	8-27-68
CHECK	G IRVIN	8-30-68
STRESS	R.F GEIDE	9-3-68
PROJECT		
APPD	SWANEY	8-30-68

Cessna AIRCRAFT CO.
COMMERCIAL AIRCRAFT DIV.
5800 E. PAWNEE
WICHITA, KANSAS

TITLE
WIRING DIAGRAM — PITCH TRIM, MIKE & MAP LIGHT, CONTROL WHEEL

SIZE	CODE IDENT. NO.	DWG NO.
C	71379	1270675

SCALE: NONE | U206 & P206 | PAGE: 2.48.4

FORM NO 80-218A

ED&RR02394 (SR5401)(SR5402) IX

REVISION			
LET	DESCRIPTION	DATE	APPD
A	BY REV: ADD SR'S; PAGE 2.49 WAS 2.48.1. (SR5158) & (SR5159) IV	JWH 8/30/67	YAK
B	BY REV: ADD NOTE 6. ED&RR 00184	9-25-67	
C	BY REV: 305-4304 WAS 26006 ED&RR 01336	RLL 11-20-67	

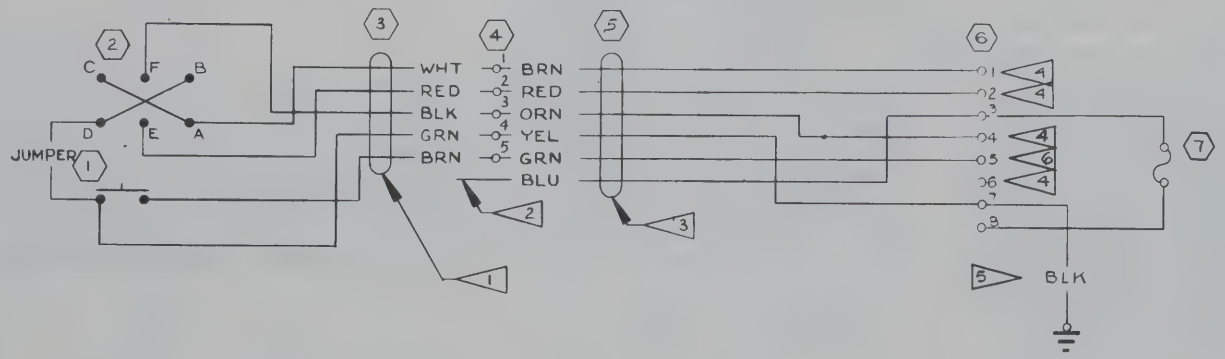

NOTES:

1. SWITCH END OF (3) WIRES TO BE SOLDERED. TERM BLOCK END TO BE TERMINATED WITH 320733 TERMINALS (00779)
2. USED ONLY WITH MAP LITE
3. BOTH ENDS OF (5) WIRES TO BE TERMINATED WITH 320733 TERMINALS (00779)
4. REFER TO 1270625 PAGE 14.9 FOR PITCH TRIM MOTOR WIRING DIAGRAM.
5. ALL WIRE SHOWN ON THIS PAGE ARE ALSO SHOWN ON PAGE 2.42.0 REFER TO 2.42.0 FOR WIRE TERMATION DETAILS.
6. A MIKE KEYING RELAY IS REQUIRED WITH 39-1 SWITCH. REFER TO PAGE 2.48 FOR RELAY & ADDITIONAL CIRCUIT.

ITEM NO.	PART NO.	DESCRIPTION	VENDOR
7	1570141-1	FUSE ASSY	
6	8-171	TERM BLOCK	(71785)
5	SF-1030-BX	CABLE	(08261)
4	5-171	TERM BLOCK	(71785)
3	8445	CABLE	(70903)
2	305-4304	SWITCH	(81579)
1	39-1	SWITCH	(81073)

EQUIPMENT TABLE

CES-1000 IS APPLICABLE
VENDOR CODES PER S-1400
CES-XXXX=CESSNA SPEC. NO.
S-XXX OR CMXXXX=CESSNA STD. NO.

SUPERSEDES: 1270675, PG 2.32

SUPERSEDED BY:

WIRE CODE NO.	GA	MATERIAL	LG	TERMINALS		SERIALS

WIRE TABLE

CONTRACT NO:

	NAME	DATE
DESIGN	ACKERSON	6-8-67
GROUP	H. Wise	7-29-67
DRAWN	J Wedel	7-26-67
CHECK	* YAKSHAW	8-30-67
STRESS		8-31-67
PROJECT	McCarter	8-4-67
APPD		

Cessna AIRCRAFT CO.
COMMERCIAL AIRCRAFT DIV.
5800 E. PAWNEE
WICHITA, KANSAS

TITLE
WIRING DIAGRAM — PITCH TRIM & MIKE SWITCH CONTROL WHEEL

SIZE	CODE IDENT. NO.	DWG NO.
C	71379	1270675

SCALE: NONE | P206 & U206 | PAGE: 2.49

(SR5158) IV & (SR5159) IV

FORM NO. 80-215A

REVISION			
LET	DESCRIPTION	DATE	APPD
A	BY REV: ADD SR'S; PAGE 2.50 WAS 2.48.2. (SR5158) & (SR5159) IX	JWH 8/30/67	YAK and NWC
B	BY REV: 305-4304 WAS 26006 ED# RR 01336	RLL 11-20-67	RLL NWC

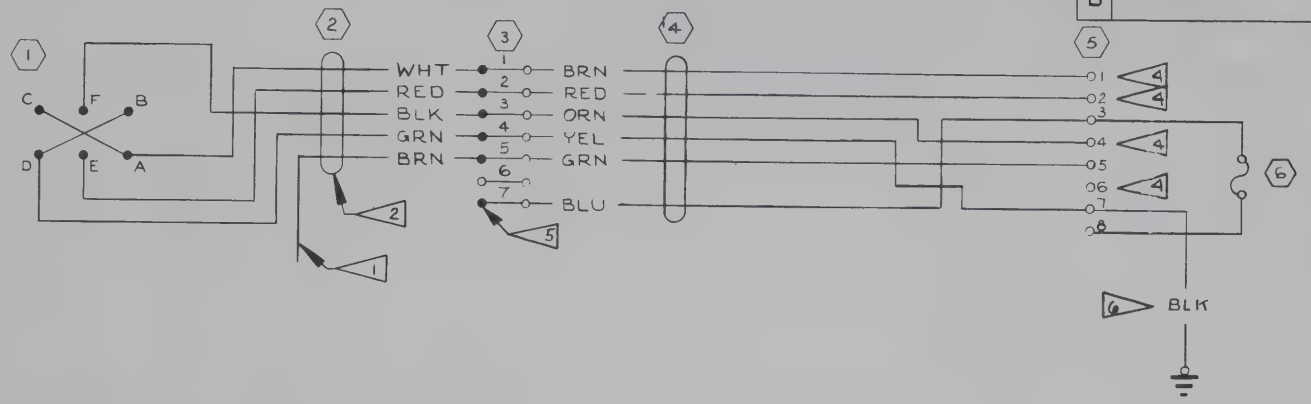

NOTES:

1. USED ONLY WITH MIKE SWITCH
2. BOTH ENDS OF (2) WIRES TO BE SOLDERED
3. BOTH ENDS OF (4) WIRES TO BE TERMINATED WITH 320733 TERMINALS (00779)
4. REFER TO 1270625 PAGE 14.4 FOR PITCH TRIM MOTOR WIRING DIAGRAM
5. POWER SOURCE FOR MAP LIGHT REFER TO 1270625 PAGE 11.11
6. ALL WIRES SHOWN ON THIS PAGE ARE ALSO SHOWN ON 1270615 PAGE 2.48.0. REFER TO 2.48.0 FOR WIRE TERMINATION DETAILS.

ITEM NO.	PART NO.	DESCRIPTION	VENDOR
6	1570141-1	FUSE ASSY	
5	8-171	TERM BLOCK	(71785)
4	SF-1030-BX	CABLE	(08261)
3	1570142-2	CIRCUIT BOARD ASSY	
2	8445	CABLE	(70903)
1	305-4304	SWITCH	(81579)

EQUIPMENT TABLE

CES-1000 IS APPLICABLE
VENDOR CODES PER S-1400
CES-XXXX=CESSNA SPEC. NO.
S-XXX OR CMXXXX=CESSNA STD. NO.

SUPERSEDES:

SUPERSEDED BY:

WIRE CODE NO.	GA	MATERIAL	LG	TERMINALS		SERIALS

WIRE TABLE

CONTRACT NO:

	NAME	DATE
DESIGN	ACKERSON	6-8-67
GROUP	N Wise	7-29-67
DRAWN	J Wood	7-26-67
CHECK	W YAKSHAW	8-30-67
STRESS	aus	8-31-67
PROJECT	McCarter	8-4-67
APPD		

Cessna AIRCRAFT CO.
COMMERCIAL AIRCRAFT DIV.
5800 E. PAWNEE
WICHITA, KANSAS

TITLE
WIRING DIAGRAM — PITCH TRIM & MAP LIGHT CONTROL WHEEL

SIZE	CODE IDENT. NO.	DWG NO.
C	71379	1270675

SCALE: NONE | P206 & U206 | PAGE: 2.50

(SR5158) IX & (SR 5159) IX

FORM NO. 80-215A

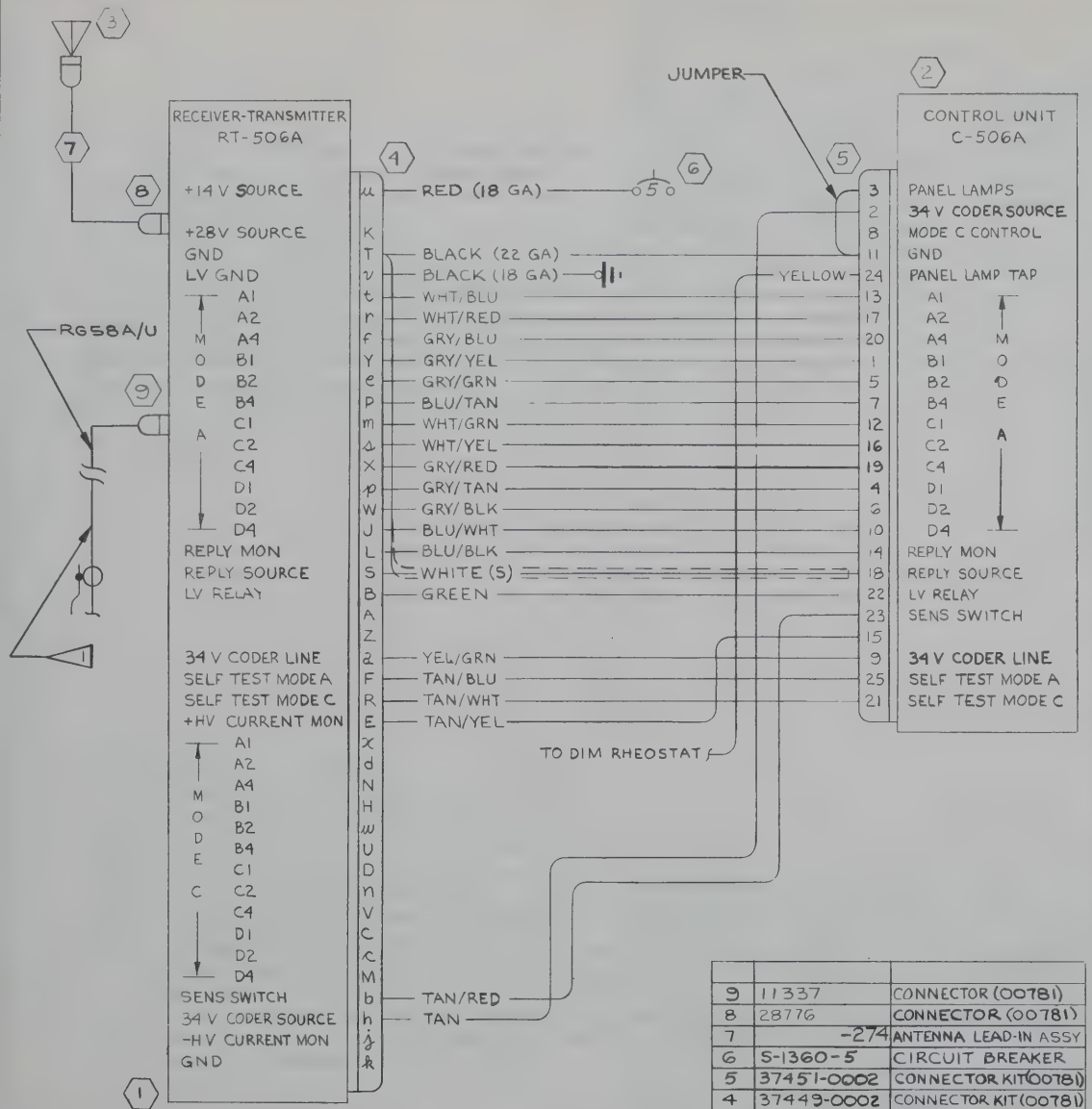

REVISIONS			
LTR	DESCRIPTION	DATE	APPROVED
A	BY REV: PAGE 2.52.1 WAS 2.22.1 ADD CABLE; DELETE WHITE WIRE ED&RR 01373 & 01352	RLY 1-12-68	RLL
B	BY REV: 37451-0002 WAS 37451 & 37449-0002 WAS 37449 ED&RR 01992	RLY 4-11-68	GKI MDS

CABLE		RG58A/U		UG-88C/U			
TAN/WHT	22	-22-10-9		SOLDER	SOLDER		
TAN/BLU	22	-22-10-6					
TAN/RED	22	-22-10-2					
TAN	22	-22-10					
WHT/BLU	22	-22-9-6					
WHT/GRN	22	-22-9-5					
WHT/YEL	22	-22-9-4					
WHT/RED	22	-22-9-2					
GRY/TAN	22	-22-8-10					
GRY/BLU	22	-22-8-6					
GRY/GRN	22	-22-8-5					
GRY/YEL	22	-22-8-4					
GRY/RED	22	-22-8-2					
GRY/BLK	22	-22-8-0					
BLU/TAN	22	-22-6-10					
BLU/WHT	22	-22-6-9					
WHITE	20(S)	S-1461-20-9					
BLU/BLK	22	-22-6-0					
YEL/GRN	20	-20-4-5					
GREEN	20	-20-5					
YELLOW	20	-20-4			SOLDER		
RED	18	-18-2			S-1367-2-8		
BLACK	18	-18-0			S-1367-2-8		
BLACK	22	-22-0		SOLDER	SOLDER		
WIRE CODE NO.	GA	MATERIAL	LG	TERMINALS			SERIALS

WIRE TABLE

ITEM NO.	PART NO.	DESCRIPTION
9	11337	CONNECTOR (00781)
8	28776	CONNECTOR (00781)
7	-274	ANTENNA LEAD-IN ASSY
6	S-1360-5	CIRCUIT BREAKER
5	37451-0002	CONNECTOR KIT (00781)
4	37449-0002	CONNECTOR KIT (00781)
3	34970-0000	ANTENNA (00781)
2	34960-1000	CONTROL UNIT (00781)
1	34950-0014	RCVR/XMTR. (00781)

EQUIPMENT TABLE

1. SUPRESSOR CABLE ROUTES WITH CABLE TO CONTROL PANEL. CENTER CONDUCTOR CONNECTS TO PIN 4 OF 300 DME CABLE & SHIELD CONNECTS TO PIN 8. CENTER CONDUCTOR TERMINATED WITH END CAP WHEN NOT USED.

CONTRACT NO:

	NAME	DATE
DESIGN	G WOOD	11-20-67
GROUP	N. Wise	10-3-67
DRAWN	G WOOD	11-20-67
CHECK	LAURIE	10-24-67
STRESS	ASHER	11-16-67
PROJECT		11-20-67
APPD		

Cessna AIRCRAFT CO.
COMMERCIAL AIRCRAFT DIV.
5800 E. PAWNEE
WICHITA, KANSAS

TITLE
WIRING DIAGRAM —
CESSNA 400 TRANSPONDER
(ARC TYPE 50GA)

SIZE	CODE IDENT. NO.	DWG NO.
C	71379	1270675

SCALE: | PAGE: 2.52.1

FORM NO. 80-215

REVISION			
LET	DESCRIPTION	DATE	APPD

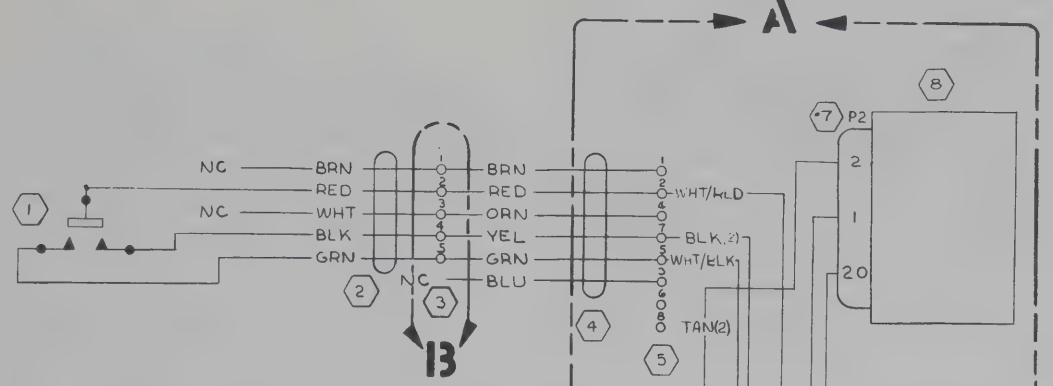

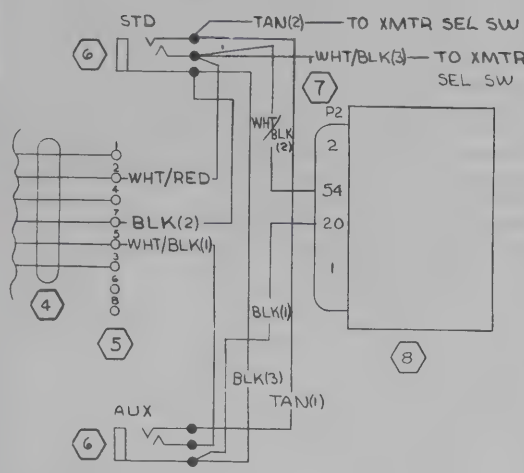

DETAIL A
2nd INSTALLATION

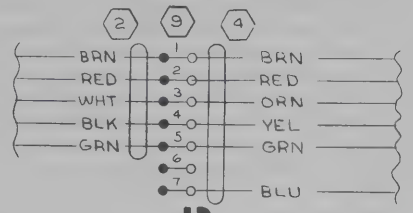

DETAIL B
CONTROL WHEEL MOUNTED MIKE KEY WITH MAP LIGHT

NOTES:

1 ON SECOND INSTALLATION WHT/BLK(3) & TAN(2) WIRES SOLDER TO XMTR SELECTOR SWITCH

2 5-171 TERM BLOCK IS REPLACED BY 1570142-2 CIRCUIT BOARD ASSY WHEN A MAP LIGHT IS INSTALLED

ITEM NO.	PART NO.	DESCRIPTION	VENDOR
9	1570142-2	CIRCUIT BOARD ASSY	
8	0570084-1	JUNCTION BOX ASSY	
7	S-1838-1	CONNECTOR	
6	S-1102-1	JACK	
5	8-171	TERM BLOCK	71785
4	SF-1030-BX	CABLE	08261
3	5-171	TERM BLOCK	71785
2	8445	CABLE	70903
1	A8002	SWITCH	HETH

EQUIPMENT TABLE

CES-1000 IS APPLICABLE
VENDOR CODES PER S-1400
CES-XXXX=CESSNA SPEC. NO.
S-XXX OR CMXXXX=CESSNA STD. NO.

SUPERSEDES: P.2.53

SUPERSEDED BY:

	WIRE CODE NO.	GA	MATERIAL	LG	TERMINALS		SERIALS
	WHT/BLK(3)	22	-22-9-0		SOLDER	SOLDER	
	WHT/RED	22	-22-9-2		SOLDER	S-1367-1-8	
1	WHT/BLK(2)	22	-22-9-0			S-1837-1	
	WHT/BLK(1)	22	-22-9-0			S-1367-1-8	
1	TAN(2)	22	-22-10			S-1837-1	
	TAN(1)	22	-22-10			SOLDER	
	BLK(3)	22	-22-0			SOLDER	
	BLK(2)	22	-22-0			S-1367-1-8	
	BLK(1)	22	-22-0		SOLDER	S-1837-1	

WIRE TABLE

CONTRACT NO:

	NAME	DATE
DESIGN	SIPES VR	6/7/68
GROUP	R. Wise	9-4-68
DRAWN	SCRAPER	8-19-68
CHECK	G. IRVIN	8-30-68
STRESS	R.F. GEIDE	9-3-68
PROJECT		
APPD	SWANEY	8-30-68

Cessna AIRCRAFT CO.
COMMERCIAL AIRCRAFT DIV.
5800 E PAWNEE
WICHITA, KANSAS

TITLE
WIRING DIAGRAM — MIKE KEY-CONTROL WHEEL

SIZE	CODE IDENT. NO.	DWG NO.
C	71379	1270675

SCALE: NONE | U206 & P206 | PAGE: 2.53.1

FORM NO. 60-218A

ED#RR02394 (SR5401)(SR5402)TC

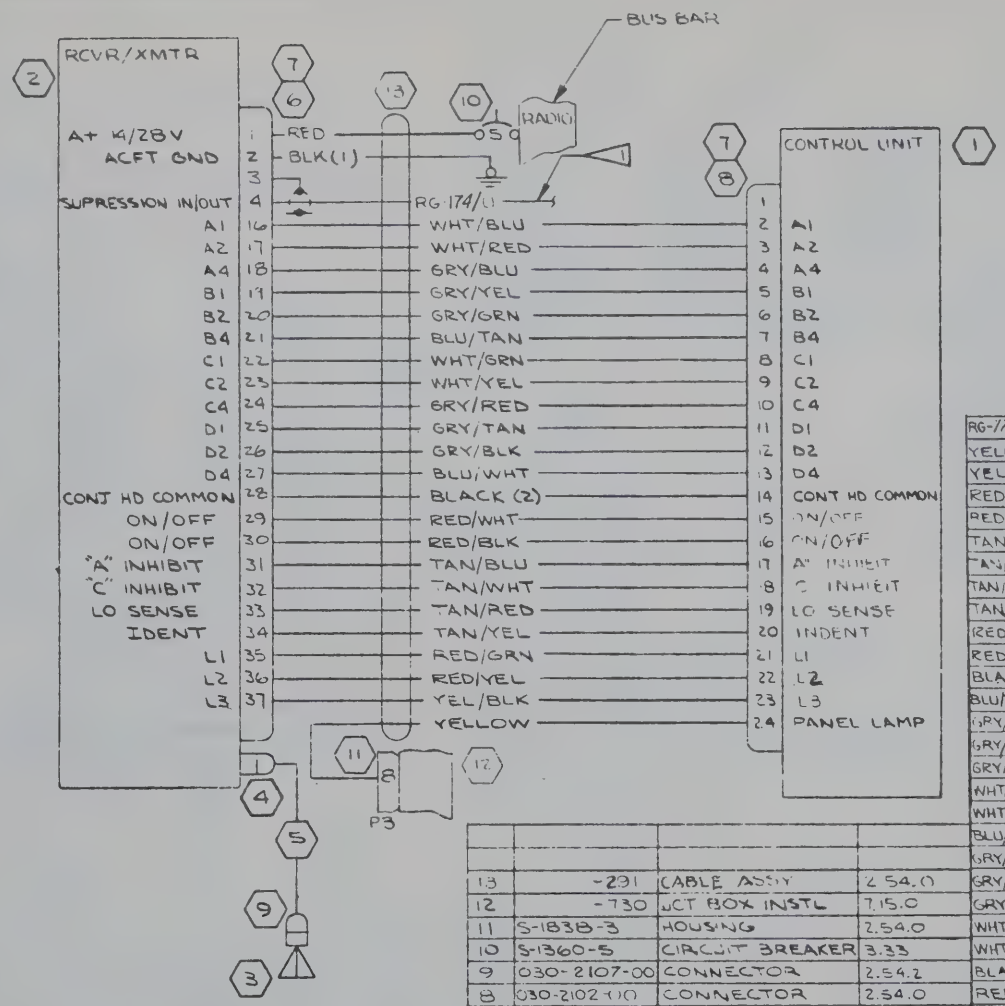

REVISION			
LET	DESCRIPTION	DATE	APPD
A	BY REV: GRY/RED WAS GRY/GRN(2), RED/WHT WAS RED(1), RED/BLK WAS RED(2), RED/YEL WAS YEL/WHT, YELLOW WAS GRY/YEL(2), GRY/YEL WAS GRY/YEL(1), GRY/GRN WAS GRY/GRN(1), RED WAS RED(3) ED&RR 10334 (SR590S)	RLY 1 23 69	JWH MDS 1-A WW

RG-174/U		CABLE		SOLDER	SOLDER
YELLOW	20	-20-4		SOLDER	S-1837-1
YEL/BLK	22	-22-4-0			SOLDER
RED/YEL	22	-22-2-4			
RED/GRN	22	-22-2-5			
TAN/YEL	22	-22-10-4			
TAN/RED	22	-22-10-2			
TAN/WHT	22	-22-10-9			
TAN/BLU	22	-22-10-6			
RED/BLK	18	-18-2-0			
RED/WHT	18	-18-2-9			
BLACK(2)	20	-20-0			
BLU/WHT	22	-22-6-9			
GRY/BLK	22	-22-8-0			
GRY/TAN	22	-22-8-10			
GRY/RED	22	-22-8-2			
WHT/YEL	22	-22-9-4			
WHT/GRN	22	-22-9-5			
BLU/TAN	22	-22-6-10			
GRY/GRN	22	-22-8-5			
GRY/YEL	22	-22-8-4			
GRY/BLU	22	-22-8-6			
WHT/RED	22	-22-9-2			
WHT/BLU	22	-22-9-6			SOLDER
BLACK(1)	18	-18-0			S-1328
RED	18	-18-2		SOLDER	S-1361-2-8
WIRE CODE NO.	GA	MATERIAL	LG	TERMINALS	SERIALS

WIRE TABLE

13	-231	CABLE ASSY	2 54.0
12	-730	JCT BOX INSTL	7.15.0
11	S-1838-3	HOUSING	2.54.0
10	S-1360-5	CIRCUIT BREAKER	3.33
9	030-2107-00	CONNECTOR	2.54.2
8	030-2102-00	CONNECTOR	2.54.0
7	030-1019-00	CA CLAMP HALF	3.33 & 4.27.0
6	030-2109-00	CONNECTOR	2.54.0
5	-292	CABLE ASSY	2.54.2
4	030-0060-00	CONNECTOR	2.54.2
3	C589505-0101	ANTENNA	6.17
2	C589504-0101	RCVR/XMTR UNIT 12V	4.27.0
1	C589503-0101	CONTROL UNIT 12V	3.33
ITEM NO.	PART NO.	DESCRIPTION	PAGE

EQUIPMENT TABLE

NOTES:

1. SUPRESSOR CABLE ROUTES WITH CABLE TO CONTROL PANEL. CENTER CONDUCTOR CONNECTS TO PIN 4 OF 300 DME CABLE & SHIELD CONNECTS TO PIN 8. CENTER CONDUCTOR TERMINATED WITH END CAP WHEN NOT USED

CES-1000 IS APPLICABLE VENDOR CODES PER S-1400. CES-XXXX=CESSNA SPEC. NO. S-XXX OR CMXXXX=CESSNA STD. NO.

SUPERSEDES:

SUPERSEDED BY:

CONTRACT NO

	NAME	DATE
DESIGN	VR SIPES	8/1/.9
GROUP	[illegible]	11-2-68
DRAWN	YOUNGERS	10 31 68
CHECK	HARRIS	11/5/68
STRESS	[illegible]	[illegible]
PROJECT	[illegible]	[illegible]
APPD	SWANEY	11-7-68

Cessna AIRCRAFT CO. COMMERCIAL & AIRCRAFT DIV 5800 E. PAWNEE WICHITA, KANSAS

TITLE
WIRING DIAGRAM — CESSNA 300 TRANSPONDER

SIZE	CODE IDENT NO	DWG NO
C	71379	1270675

SCALE NONE | J206 & P206 | PAGE 2.54.1

ED&RR 10095 (SR590S)

REVISION			
LET	DESCRIPTION	DATE	APPD

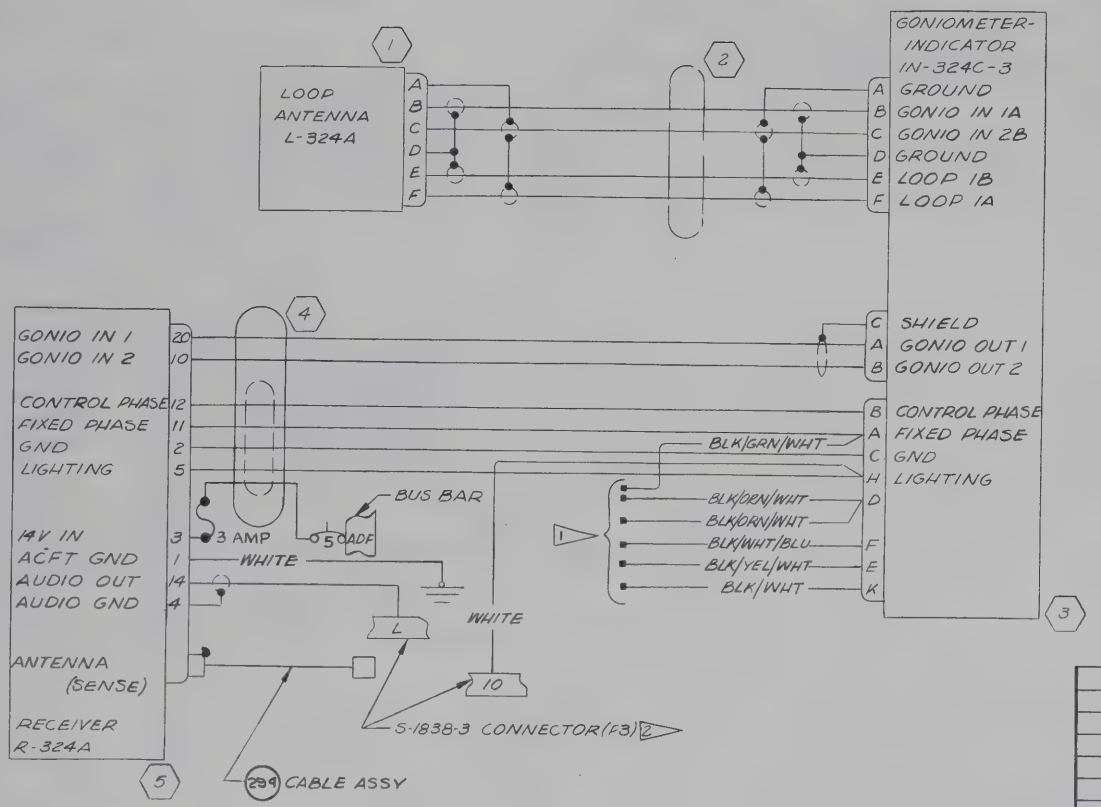

NOTES:
1. THESE WIRES TO BE CUT & CAPPED APPROX 2" FROM PLUG.
2. WIRE TERMINALS S-1837-1

WIRE CODE NO.	GA	MATERIAL	LG	TERMINALS		SERIALS

WIRE TABLE

ITEM NO.	PART NO.	DESCRIPTION	PAGE
5	36380-1000	RECEIVER	P 3.28.1
4	38422-0014	CABLE ASSY	P 3.29.1
3	38450-0003	GONIOMETER IND.	P 3.28.1
2	33827	LOOP CABLE ASSY	P 6.3
1	36420-1100	LOOP ANTENNA	P 6.3

EQUIPMENT TABLE

CES-1000 IS APPLICABLE VENDOR CODES PER S-1400
CES-XXXX=CESSNA SPEC. NO.
S-XXX OR CMXXXX=CESSNA STD. NO.

SUPERSEDES:

SUPERSEDED BY:

CONTRACT NO:

	NAME	DATE
DESIGN	LAURIE	
GROUP	R. Wind	9-4-68
DRAWN	L. SCRAPER	8-27-68
CHECK	G IRVIN	8-30-68
STRESS	RFGEIDE	9-3-68
PROJECT	[illegible]	9-11-68
APPD	SWANEY	8-30-68

Cessna AIRCRAFT CO.
COMMERCIAL AIRCRAFT DIV.
5800 E. PAWNEE
WICHITA, KANSAS

TITLE
WIRING DIAGRAM —
CESSNA 400 ADF
(ARC TYPE 324A)

SIZE	CODE IDENT. NO.	DWG NO.
C	71379	1270675

SCALE: NONE | U206 & P206 | PAGE: 2.55.1

FORM NO 80-215A

(SR5401)(SR5402) IX

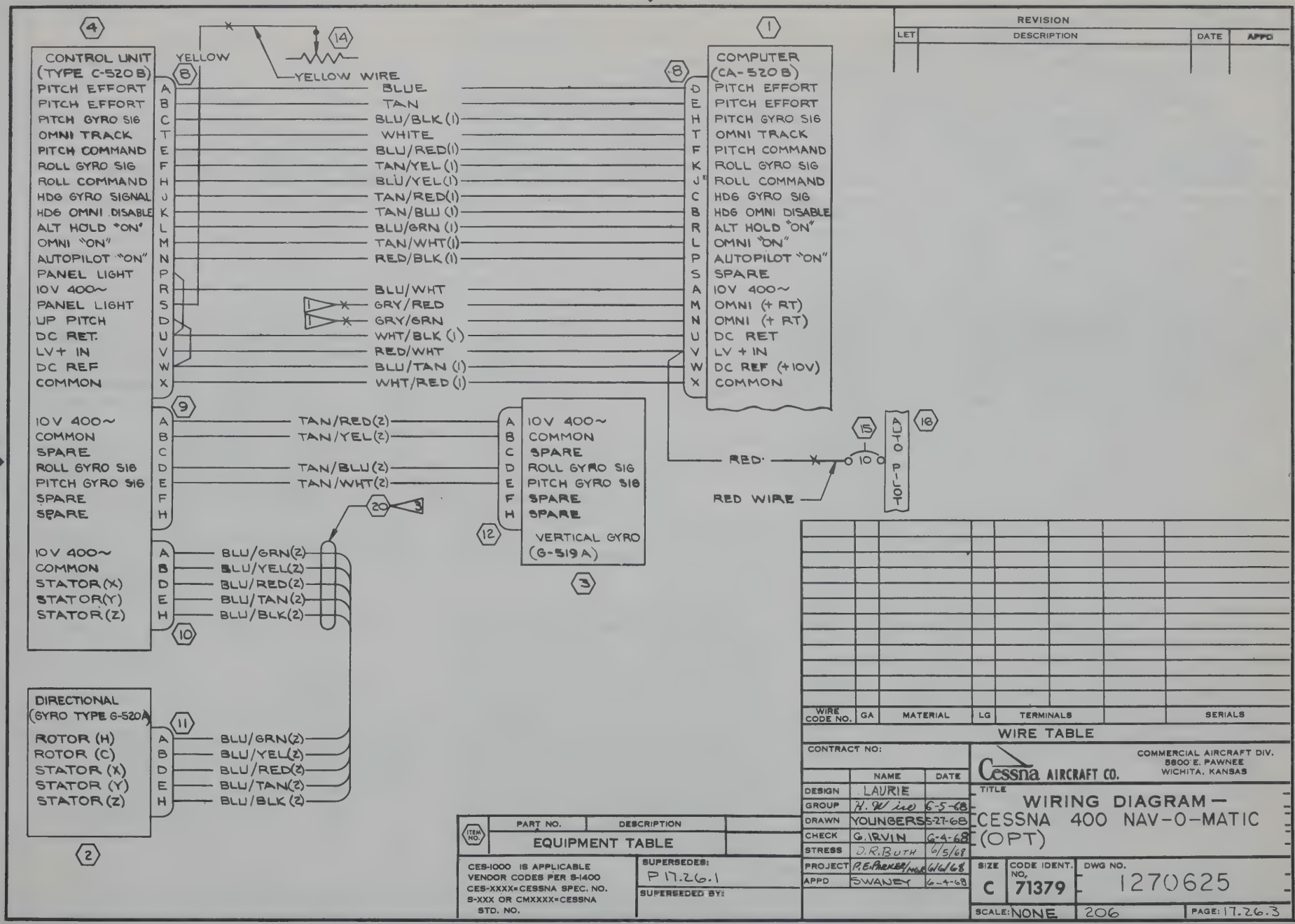

REVISION			
LET	DESCRIPTION	DATE	APPD

WIRE CODE NO.	GA	MATERIAL	LG	TERMINALS		SERIALS

WIRE TABLE

ITEM NO.	PART NO.	DESCRIPTION

EQUIPMENT TABLE

CES-1000 IS APPLICABLE
VENDOR CODES PER S-1400
CES-XXXX=CESSNA SPEC. NO.
S-XXX OR CMXXXX=CESSNA STD. NO.

SUPERSEDES: P 17.26.1

SUPERSEDED BY:

CONTRACT NO:

	NAME	DATE
DESIGN	LAURIE	
GROUP	H. Wiro	6-5-68
DRAWN	YOUNGERS	5-27-68
CHECK	G. IRVIN	6-4-68
STRESS	D.R. BUTH	6/5/68
PROJECT	P.E. PARKER/MGR	6/6/68
APPD	SWANEY	6-4-68

Cessna AIRCRAFT CO.
COMMERCIAL AIRCRAFT DIV.
5800 E. PAWNEE
WICHITA, KANSAS

TITLE
WIRING DIAGRAM — CESSNA 400 NAV-O-MATIC (OPT)

SIZE C | CODE IDENT. NO. 71379 | DWG NO. 1270625

SCALE: NONE | 206 | PAGE: 17.26.3

FORM NO. 80-215A

ED&RR 02329 (SR5752)

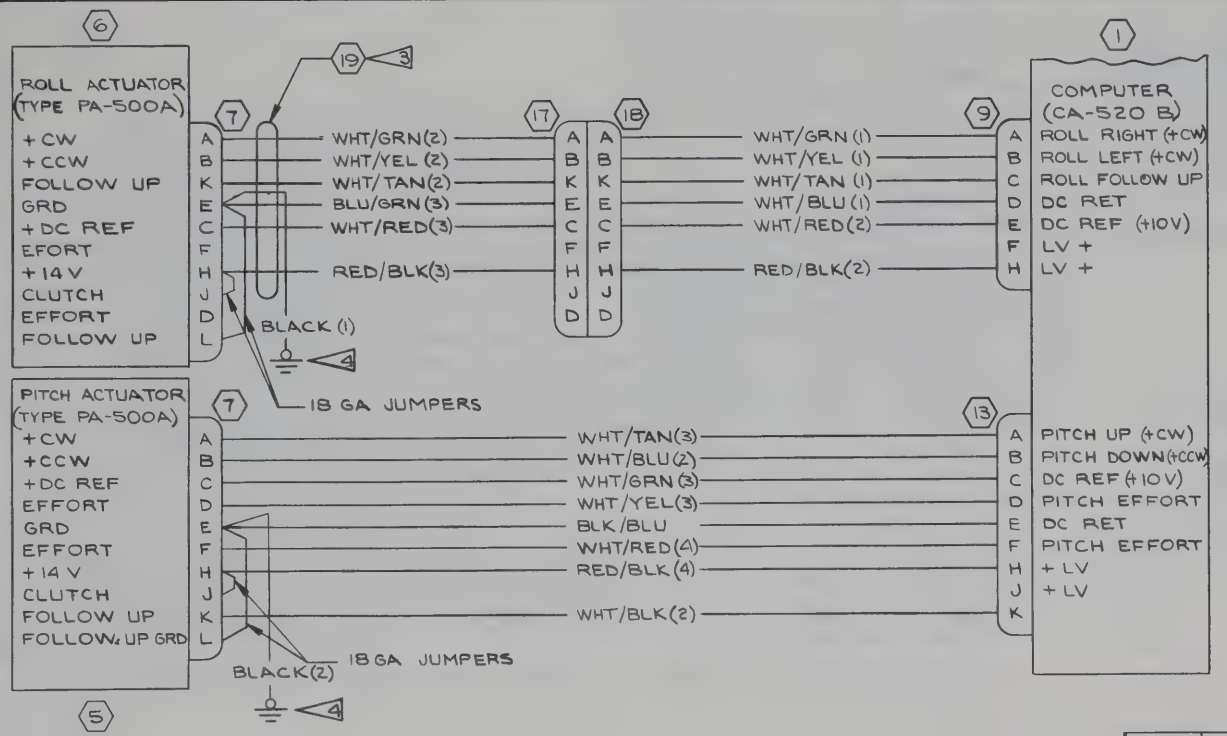

REVISION			
LET	DESCRIPTION	DATE	APPD

WIRE CODE NO.	GA	MATERIAL	LG	TERMINALS		SERIALS

WIRE TABLE

ITEM NO.	PART NO.	DESCRIPTION

EQUIPMENT TABLE

CES-1000 IS APPLICABLE
VENDOR CODES PER S-1400
CES-XXXX=CESSNA SPEC. NO.
S-XXX OR CMXXXX=CESSNA
STD. NO.

SUPERSEDES: P17.26.1

SUPERSEDED BY:

CONTRACT NO:

	NAME	DATE
DESIGN	LAURIE	
GROUP	N. Wind	6-5-68
DRAWN	YOUNGERS	5-27-68
CHECK	G IRVIN	6-4-68
STRESS	D.R. BUTH	6/5/68
PROJECT	P.E. PARKER/MGR	6/6/68
APPD	SWANEY	6-4-68

Cessna AIRCRAFT CO.
COMMERCIAL AIRCRAFT DIV.
5800 E. PAWNEE
WICHITA, KANSAS

TITLE
WIRING DIAGRAM — CESSNA 400 NAV-O-MATIC (OPT)

SIZE	CODE IDENT. NO.	DWG NO.
C	71379	1270625

SCALE: NONE | 206 | PAGE: 17.26.4

FORM NO. 80-215A

ED&RR 02329 (SR5752)

REVISION			
LET	DESCRIPTION	DATE	APPD

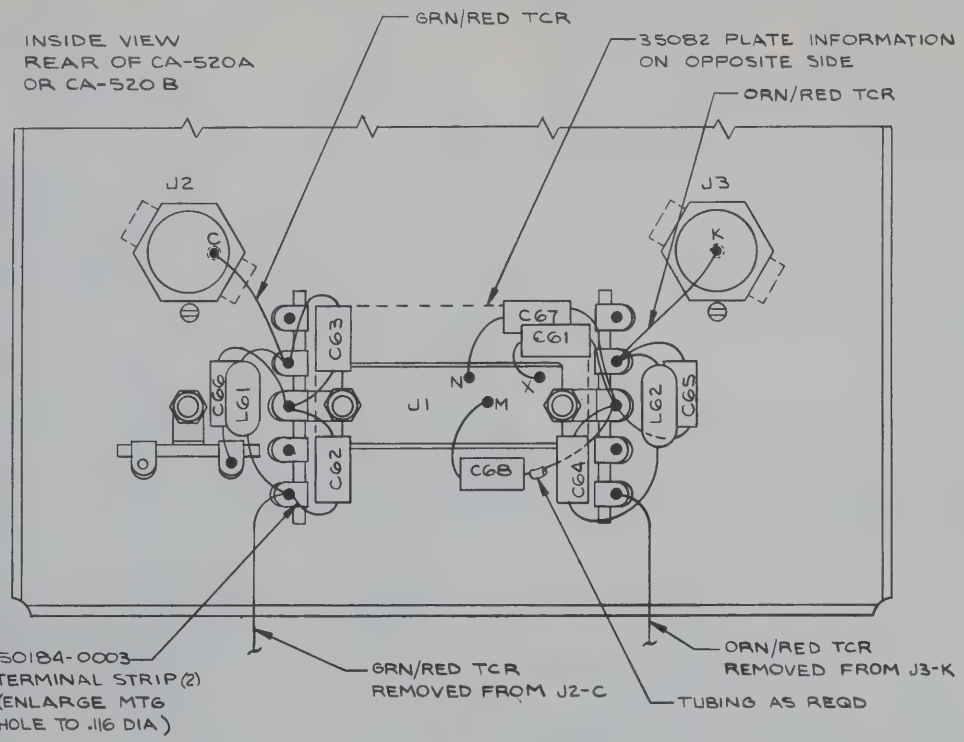

SCHEMATIC DIAGRAM

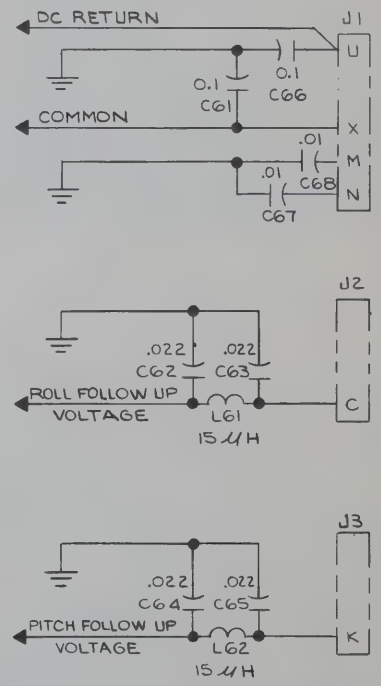

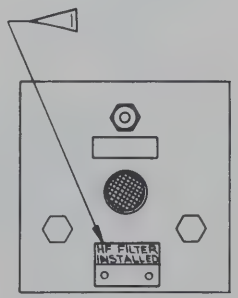

NOTES:

1. TO BE MOUNTED WITH EXISTING SCREWS WHEN MODIFICATION HAS BEEN COMPLETED
2. REMOVE NUTS FROM CONNECTOR J1, BACK OUT CONNECTOR, INSTALL INFORMATION PLATE 35082 REPLACE CONNECTOR ON CHASSIS THEN INSTALL TWO TERMINAL STRIPS 50184-0003 AS SHOWN USING CONNECTOR MTG SCREWS, REINSTALL NUTS
3. INSTALL CAPACITORS AND CHOKES AS SHOWN IN WIRING AND SCHEMATIC DIAGRAMS
4. UNSOLDER WIRES FROM J2-C AND J3-K AND RESOLDER TO NEW LOCATIONS AS SHOWN
5. CONTACTING SURFACES BETWEEN COMPUTER AND SHELF MUST BE CLEAN AND FREE OF CONTAMINANTS IN ORDER TO MAKE POSITIVE ELECTRICAL COTACT

FILTER KIT			
ITEM NO.	ARC PART NO.	DESCRIPTION	QTY
1	32423-9223	.022 μF CAPACITOR	4
2	32423-9103	.010 μF CAPACITOR	2
3	32423-9102	.100 μF CAPACITOR	2
4	31193-0150	15 μH CHOKE	2
5	50184-0003	TERMINAL STRIP	2
6	35082	INFORMATION PLATE	1
7	21471-0502 (3")	GREEN/RED WIRE	1
8	21471-0302 (3")	ORANGE/RED WIRE	1
9	8800-003216")	TUBING	1
10	35094	DRAWING	1

ITEM NO.	PART NO.	DESCRIPTION
	EQUIPMENT TABLE	

CES-1000 IS APPLICABLE
VENDOR CODES PER S-1400
CES-XXXX=CESSNA SPEC. NO.
S-XXX OR CMXXXX=CESSNA
STD. NO.

SUPERSEDES: P 17.26.1.1

SUPERSEDED BY:

CONTRACT NO:		
	NAME	DATE
DESIGN	LAURIE	
GROUP	H. Wilo	6-5-68
DRAWN	YOUNGERS	5-27-68
CHECK	G. IRVIN	6-4-68
STRESS	D.R. BUTH	6/5/68
PROJECT	P.E. PARKER	6/6/68
APPD	SWANEY	6-4-68

Cessna AIRCRAFT CO.
COMMERCIAL AIRCRAFT DIV.
5800 E. PAWNEE
WICHITA, KANSAS

TITLE
WIRING DIAGRAM—
NAV-O-MATIC 400 SYSTEM
(OPT)

SIZE	CODE IDENT. NO.	DWG NO.
C	71379	1270625

SCALE: NONE | 206 | PAGE: 17.26.5

FORM NO. 80-215A

EDIAR 02329 (SR 5752)

REVISION			
LET	DESCRIPTION	DATE	APPD

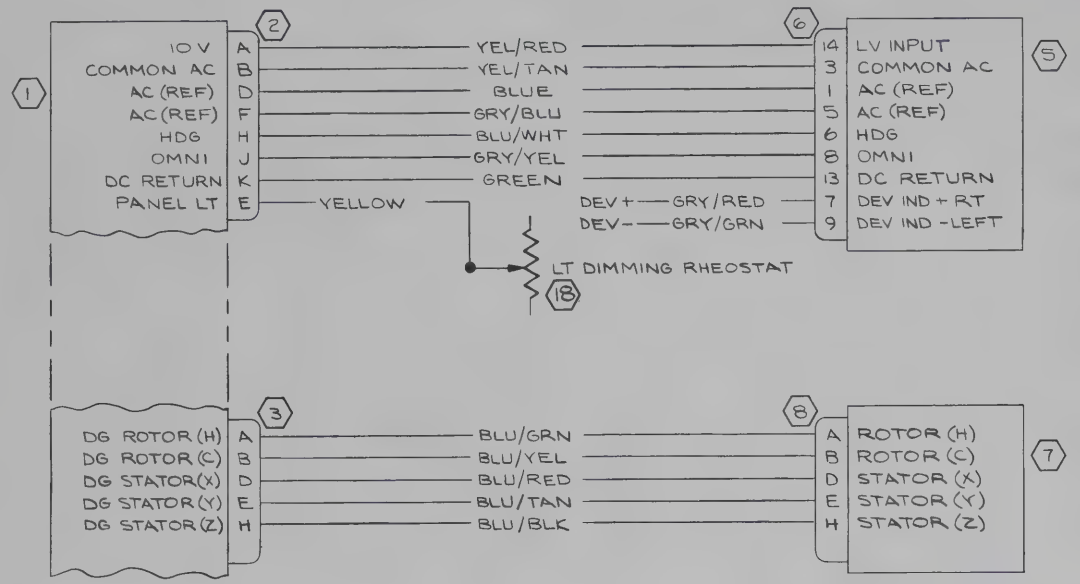

WIRE CODE NO.	GA	MATERIAL	LG	TERMINALS		SERIALS

WIRE TABLE

ITEM NO.	PART NO.	DESCRIPTION

EQUIPMENT TABLE

CES-1000 IS APPLICABLE
VENDOR CODES PER S-1400
CES-XXXX=CESSNA SPEC. NO.
S-XXX OR CMXXXX=CESSNA
STD. NO.

SUPERSEDES: P17.28.0 & P17.28.1

SUPERSEDED BY:

CONTRACT NO:

	NAME	DATE
DESIGN	LAURIE	
GROUP	R. Wied	5-24-68
DRAWN	YOUNGERS	5-7-68
CHECK	G IRVIN	5-10-68
STRESS	W.R. Buth	5/23/68
PROJECT	[illegible]	5/15/68
APPD	SWANEY	5-10-68

Cessna AIRCRAFT CO.
COMMERCIAL AIRCRAFT DIV.
5800 E. PAWNEE
WICHITA, KANSAS

TITLE
WIRING DIAGRAM —
CESSNA 300 NAV-O-MATIC
AUTOPILOT (14VOLT)

SIZE	CODE IDENT. NO.	DWG NO.
C	71379	1270625

SCALE: NONE | P206 & U206 | PAGE: 17.29.1

FORM NO. 80-215A

ED & RR 02325 (SR5751)

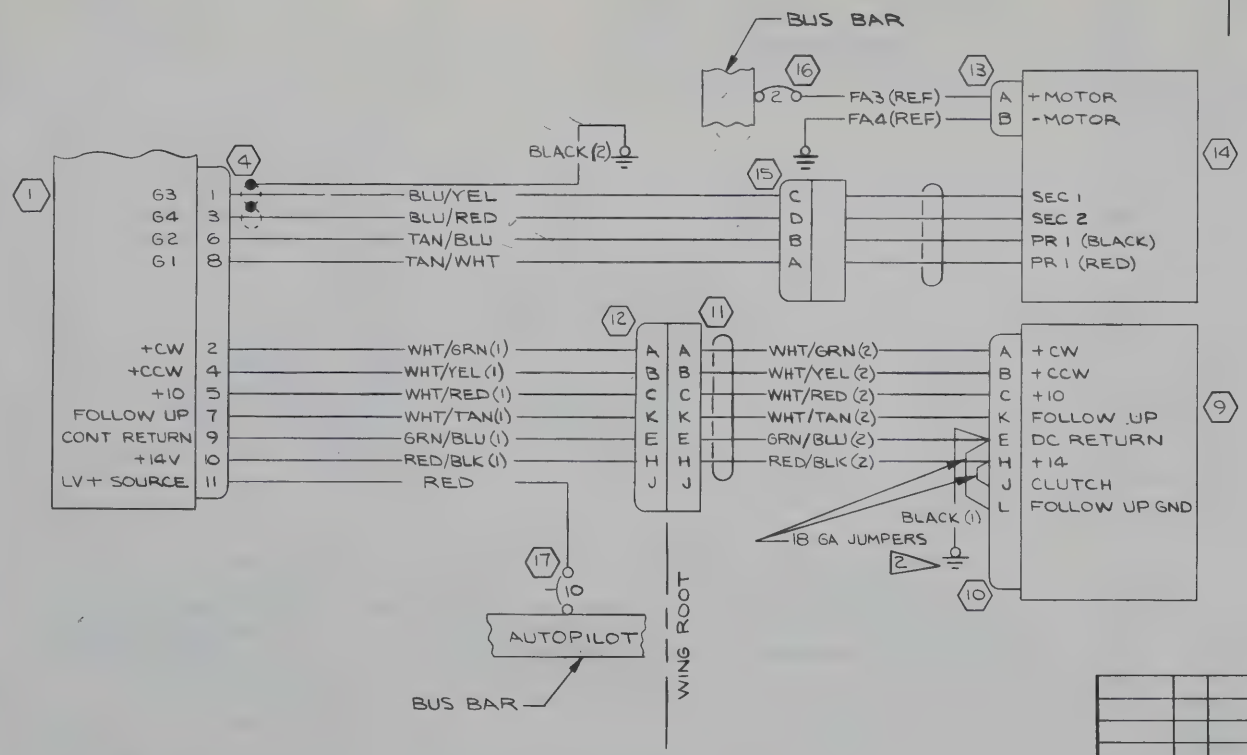

REVISION			
LET	DESCRIPTION	DATE	APPD

WIRE CODE NO.	GA	MATERIAL	LG	TERMINALS		SERIALS

WIRE TABLE

ITEM NO.	PART NO.	DESCRIPTION
		EQUIPMENT TABLE

CES-1000 IS APPLICABLE
VENDOR CODES PER S-1400
CES-XXXX=CESSNA SPEC. NO.
S-XXX OR CMXXXX=CESSNA
STD. NO.

SUPERSEDES: P17.28.0 & P17.28.1

SUPERSEDED BY:

CONTRACT NO:

	NAME	DATE
DESIGN	LAURIE	
GROUP	R. Wise	5-27-68
DRAWN	YOUNGERS	5-7-68
CHECK	G IRVIN	5-10-68
STRESS	D.R. BUTH	5/23/68
PROJECT	P Parker	5/25/68
APPD	SWANEY	5-10-68

Cessna AIRCRAFT CO.
COMMERCIAL AIRCRAFT DIV.
5800 E. PAWNEE
WICHITA, KANSAS

TITLE
WIRING DIAGRAM—
CESSNA 300 NAV-O-MATIC
AUTOPILOT (14VOLT)

SIZE	CODE IDENT. NO.	DWG NO.
C	71379	1270625

SCALE: NONE | P206 & U206 | PAGE: 17.29.2

FORM NO. 80-215A

ED & RR 02325 (SR5751)

TABLE OF CONTENTS

PAGE NO.	TITLE	DATE ISSUED	REV
	207 SERIAL 20700001 & ON **T207 SERIAL 20700001 & ON**		
2.0.1	Radio Speaker, Mike, Phone Jack, Light Rheo & Pwr Circuits	9-16-68	NC
2.0.2	S. D. - Audio Junction Box, Internal Wiring	3-7-69	NC
2.5.0	Cable Assy - Audio, Omni & Transmitter Selector Switches	9-16-68	NC
2.5.1	W. D. - Autopilot Omni Selector Switch	9-16-68	NC
2.5.2	W. D. - Transmitter Selector Switch	9-16-68	NC
2.5.3	W. D. - Audio Selector Switch	9-16-68	NC
2.6.1.1	W. D. - Cessna 300 Nav/Com (Type 540A & 517R with IN-525A & IN-514)	9-16-68	NC
2.7.1	W. D. - Cessna 300 Com (ARC Type 524A)	9-16-68	NC
2.8	W. D. - Cessna 300 ADF (ARC Type 521B)	9-16-68	NC
2.9.1	W. D. - Cessna 400 ADF (ARC Type 324A)	9-16-68	NC
2.11.1	W. D. - Cessna 300 Marker Beacon (ARC Type R-502B)	9-16-68	NC
2.13.1.1	W. D. - Cessna 300 HF	9-16-68	NC
2.13.1.2	W. D. - Cessna 300 HF	9-16-68	NC
2.15.1	W. D. - Cessna 300 DME	9-16-68	NC
2.17.1	W. D. - Cessna 400 Glideslope (ARC Type R-543B)	9-16-68	NC
2.18.1	W. D. - Cessna 400 Glideslope (ARC Type R-543B)	9-16-68	NC
2.20.2	W. D. - Cessna 400 Nav/Com (ARC Type RT-522A & RT-532A)	9-16-68	NC
2.20.3	W. D. - Cessna 400 Nav/Com (ARC Type RT-522A & RT-532A)	9-16-68	NC
2.22.1.0	W. D. - Cessna 400 Transponder (ARC Type 506A)	9-16-68	NC
2.22.1.1	W. D. - Cessna 400 Transponder (ARC Type 506A)	9-16-68	NC
2.23.1	W. D. - Narco UGR-2 Glideslope with Narco Mark 12A & VOA-9	9-16-68	NC

TABLE OF CONTENTS

PAGE NO.	TITLE	DATE ISSUED	REV
2.24.1.0	W. D. - Narco Mark 12A with VOA-8 & VOA-9	9-16-68	NC
2.24.1.1	W. D. - Narco Mark 12A with VOA-8 & VOA-9	9-16-68	NC
2.25.1	W. D. - Isolation Amplifier, King KA-25C	11-7-68	NC
2.26	W. D. - Typical Switching, Iso Amp & ADF, 300 HF & 300 Com	11-18-68	NC
2.27.0	Cable Assy - Audio Sel Sw Narco Mark 12A	9-16-68	NC
2.27.1	W. D. - Audio Selector Switch, Narco Mark 12A	9-16-68	NC
2.27.2	W. D. - Typical Switching Narco Mark 12A & ADF	12-2-68	NC
2.29	W. D. - Pitch Trim, Mike & Map Light, Control Wheel	11-11-68	NC
2.30	W. D. - Pitch Trim, & Mike Switch, Control Wheel	9-16-68	NC
2.31	W. D. - Pitch Trim & Map Light, Control Wheel	9-16-68	NC
2.32.1	W. D. - Cessna 300 Transponder	2-3-69	A
2.33	W. D. - Mike Key, Control Wheel Mounted	11-18-68	NC
	DRAWING NUMBER 1270800		
17.1.1	Cessna 300 Nav-O-Matic Autopilot (14-Volt)	10-21-68	NC
17.1.2	Cessna 300 Nav-O-Matic Autopilot (14-Volt)	10-21-68	NC
17.2.1	Cessna 400 Nav-O-Matic Autopilot (Opt.)	10-21-68	NC
17.2.2	Cessna 400 Nav-O-Matic Autopilot (Opt.)	10-21-68	NC
17.2.3	Nav-O-Matic 400 System (Opt.)	10-21-68	NC

NOTES:
1. AMP RATING OF S-1360 CKT BKR TO BE DETERMINED BY INSTL
2. WIRES TO BE OF SUFFICIENT LENGTH TO ALLOW CONNECTION TO ALL POSSIBLE RADIO COMBINATIONS. TERMINALS TO BE DETERMINED BY INSTL

REVISION			
LET	DESCRIPTION	DATE	APPD

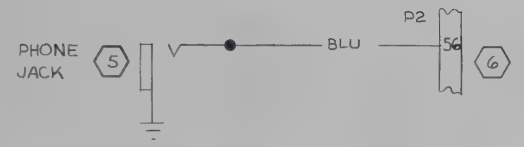

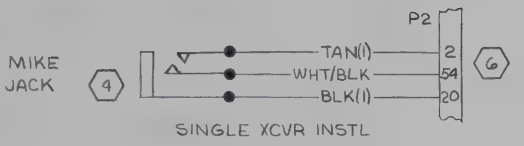

SINGLE XCVR INSTL

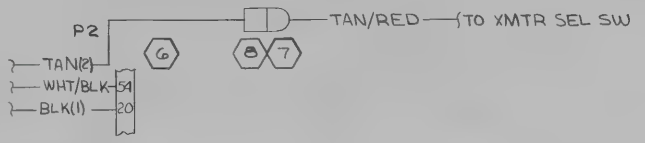

DUAL XCVR INSTL

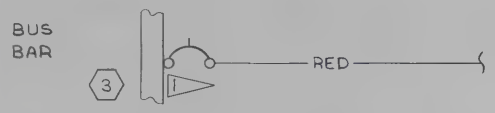

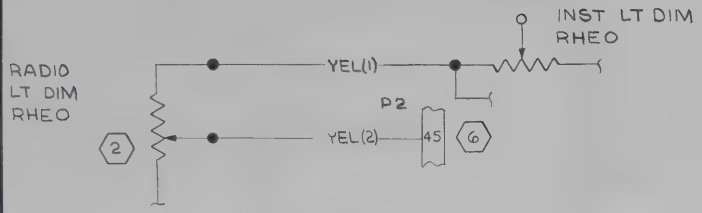

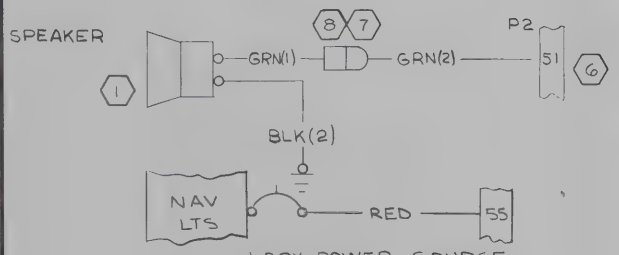

ITEM NO.	PART NO.	DESCRIPTION	PAGE
8	S-1637-2	HOUSING-PLUG	
7	S-1637-1	HOUSING-CAP	
6	S-1838-1	HOUSING	
5	S-1612-1	JACK	7.6
4	S-1102-1	JACK	7.1
1	S-1360	CIRCUIT BREAKER	3.1
2	S-1880-3	RHEOSTAT	
1	C596504-0101	SPEAKER	

EQUIPMENT TABLE

CES-1000 IS APPLICABLE VENDOR CODES PER S-1400
CES-XXXX=CESSNA SPEC. NO.
S-XXX OR CMXXXX=CESSNA STD. NO.

SUPERSEDES:

SUPERSEDED BY:

WIRE CODE NO.	GA	MATERIAL	LG	TERMINALS		SERIALS
TAN/RED	22	-22-10-2		SOLDER	S-1635-1	
TAN(2)	22	-22-10		S-1636-1	SOLDER	
WHT/BLK	22	-22-9-0		S-1837-1	SOLDER	
GRN(2)	20	-20-5		S-1837-1	S-1635-1	
GRN(1)	20	-20-5		S-1636-1	S-1829-1	
RED	16	-16-2		2	S-1367-26	
TAN	22	-22-10		S-1837-1	SOLDER	
BLU	22	-22-6		S-1837-1	SOLDER	
YEL(2)	18	-18-4		SOLDER	S-1837-1	
YEL(1)	18	-18-4		SOLDER	SOLDER	
BLK(2)	22	-22-0		S-1829-1	S-1367-1-8	
BLK(1)	22	-22-0		S-1367-1-8	SOLDER	

WIRE TABLE

CONTRACT NO:

	NAME	DATE
DESIGN	J. HENSHAW	10-11-68
GROUP	R. Wisd	10-11-68
DRAWN	L. SCRAPER	10-2-68
CHECK	RCA XTELL	10-8-68
STRESS	R.F. GEIDE	10-11-68
PROJECT		10-11-68
APPD	SWANEY	10-10-68

Cessna AIRCRAFT CO.
COMMERCIAL AIRCRAFT DIV.
5800 E. PAWNEE
WICHITA, KANSAS

TITLE
WIRING DIAGRAM — RADIO SPEAKER, MIKE & PHONE JACK, LIGHT RHEO & POWER CIRCUITS

SIZE	CODE IDENT. NO.	DWG NO.
C	71379	1270801

SCALE: NONE | 207 | PAGE: 2.0.1

FORM NO 80-219A

ED # RR 10028 (SR5707) IX

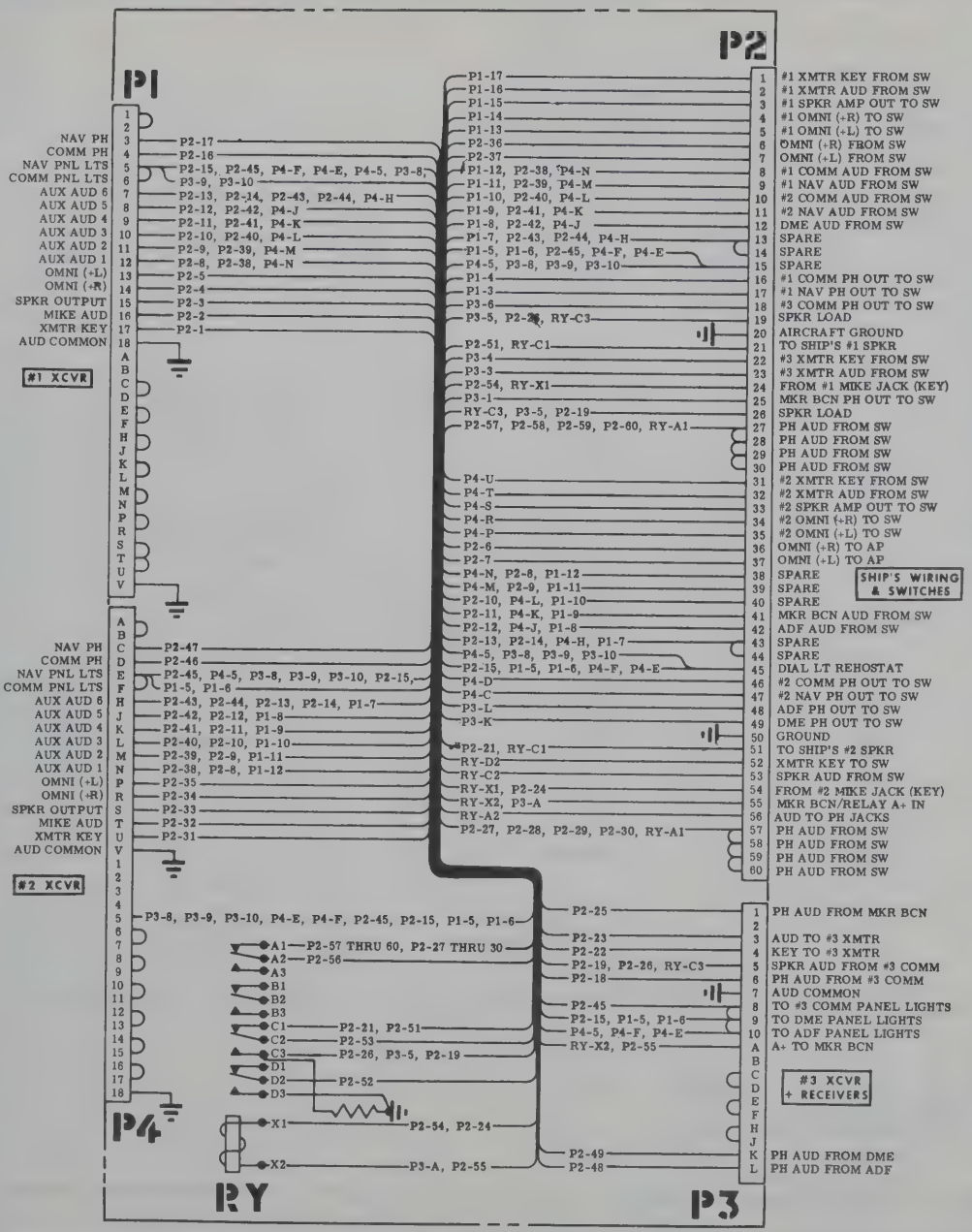

REVISIONS			
LTR	DESCRIPTION	DATE	APPROVED
A	BY REV: 465195-2 WAS 46195-2; ADD NOTE 8 EDRR 24170	DGP 4-69	

NOTES:

1. THIS DRAWING FOR TECHNICAL USE ONLY
2. P1 AND P4 MATE WITH S-1838-2 HOUSING (AMP 1-582191-5)
3. P2 MATES WITH S-1838-1 HOUSING (AMP 480146-7)
4. P3 MATES WITH S-1838-3 HOUSING (AMP 582963-2)
5. ALL THE ABOVE HOUSINGS USE S-1837-1 CONTACT PINS (AMP 42717-3LP) AND S-1836-1 KEYING PLUGS (AMP 582501-1)
6. CONTACTS CRIMP ON WITH AMP TOOL 90017
7. CONTACTS EXTRACT WITH AMP TOOL 465195-2
8. IF A CRIMPING TOOL IS NOT AVAILABLE WIRES MAY SOLDERED TO PINS IN LIEU OF CRIMPING

CONTRACT NO:

	NAME	DATE
DESIGN	VR SIPES	1-13-69
GROUP	H. Wiel	3-11-69
DRAWN	NUCKOLLS	2-7-69
CHECK	HARRIS	3-4-69
STRESS	R.F. GEIDE	3-7-69
PROJECT	[illegible]	3-12-69
APPD	M. Delaney	3-5-69

Cessna AIRCRAFT CO.
COMMERCIAL AIRCRAFT DIV.
5800 E. PAWNEE
WICHITA, KANSAS

TITLE
SCHEMATIC DIAGRAM - AUDIO JUNCTION BOX, INTERNAL WIRING

SIZE	CODE IDENT. NO.	DWG NO.
C	71379	1270801

SCALE: NONE | 207 | PAGE: 2.0.2

ED&RR 10361 SER 207-0001 & ON

REVISION			
LET	DESCRIPTION	DATE	APPD

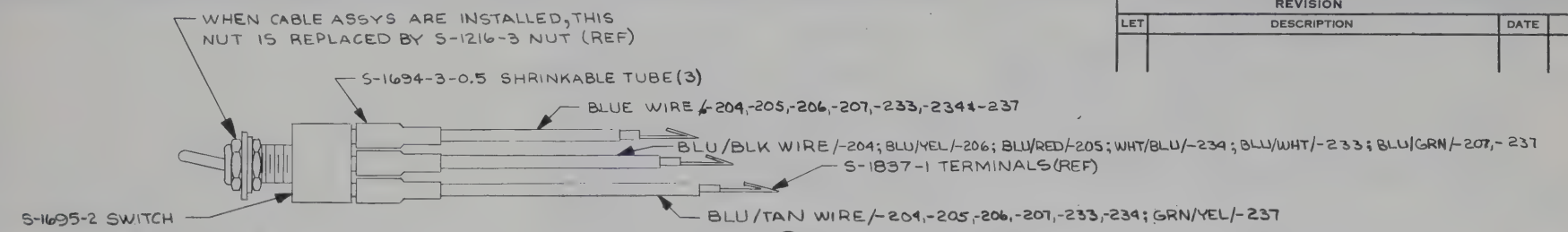

(204) CABLE ASSY - AUDIO SELECTOR SWITCH - COM 1
(205) CABLE ASSY - AUDIO SELECTOR SWITCH - NAV 1
(206) CABLE ASSY - AUDIO SELECTOR SWITCH - COM 2
(207) CABLE ASSY - AUDIO SELECTOR SWITCH - NAV 2
(233) CABLE ASSY - AUD SEL SW - DME
(234) CABLE ASSY - AUD SEL SW - ADF
(237) CABLE ASSY - MKR BCN SEL SW

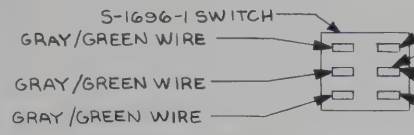

(208) CABLE ASSY - OMNI SELECTOR SWITCH (REAR VIEW)

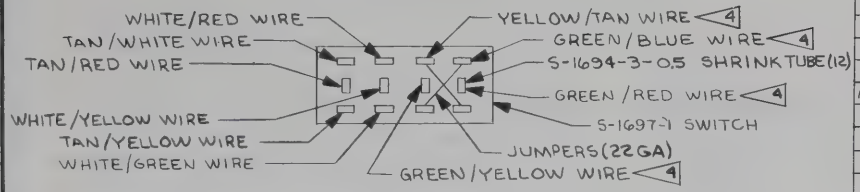

(209) CABLE ASSY - TRANSMITTER SELECTOR SW (REAR VIEW)

NOTES:

1. S-1694-3-0.5 TUBING INSTALLED ON ALL SWITCHES AS SHOWN ON AUDIO SELECTOR SWITCH.
2. SWITCHES SHOWN WITH KEY WAY AT TOP.
3. ALL WIRES ARE REFERENCED. REFER TO APPLICABLE WIRING DIAGRAM FOR FABRICATION INFORMATION.

4 WHEN -209 IS USED ON DUAL NARCO INSTLS, THE YEL/TAN, GRN/BLU, GRN/RED, & GRN/YEL WIRES ARE TO BE CUT & CAPPED APPROXIMATELY 4 INCHES FROM SWITCH

237	234	233	209	208	207	206	205	204	EFFECTIVE SERIALS	PAGE	PART NUMBER	DESCRIPTION
NO. REQD / NEXT ASSY												
											-237	CABLE ASSY-MKR BCN SW
											-234	CABLE ASSY-AUD SW-ADF
											-233	CABLE ASSY-AUD SW-DME
AR	AR	AR			AR	AR	AR	AR		2.5.3		WIRING
				AR						2.5.1		WIRING
			AR							2.5.2		WIRING
			1								S-1697-1	SWITCH
				1							S-1696-1	SWITCH
1	1	1			1	1	1	1			S-1695-2	SWITCH
3	3	3	12	6	3	3	3	3			S-1694-3-0.5	SHRINKABLE TUBE
											-209	CABLE ASSY-XMTR SEL
											-208	CABLE ASSY-OMNI SEL
											-207	CABLE ASSY-AUD SW-NAV2
											-206	CABLE ASSY-AUD SW-COM2
											-205	CABLE ASSY-AUD SW-NAV1
											-204	CABLE ASSY-AUD SW-COM1

LIST OF MATERIAL

DO NOT SCALE PRINT
BREAK ALL SHARP EDGES
A/R = AS REQD
CES-XXXX=CESSNA SPEC. NO.
S-XXX OR CMXXXX=CESSNA STD. NO.
$=APPROX EQUAL SPACES
CES-1000 IS APPLICABLE VENDOR CODES PER S-1400

UNLESS OTHERWISE SPECIFIED
DIMENSIONS ARE IN INCHES
TOLERANCES ARE
DECIMALS: .00 ±.03; .000 ±.010
ANGLES: MACH ±0 30'; FORMED ±2°
FOR HOLES, CSINKS, ETC., SEE CES 1012
FOR BASIC CODES SEE NAS 523
BJ-MS20470AD | BB-MS20426AD

SUPERSEDES:
SUPERSEDED BY:

CONTRACT NO:

	NAME	DATE
DESIGN	J. HENSHAW	10-11-68
GROUP	J. Wind	10-17-68
DRAWN	L. SCRAPER	10-2-68
CHECK	RCA XTELL	10-9-68
STRESS	R.F. GEIDE	10-11-68
PROJECT		10-14-68
APPD	SWANEY	10-10-68

Cessna AIRCRAFT CO.
COMMERCIAL AIRCRAFT DIV.
5800 E. PAWNEE
WICHITA, KANSAS

TITLE
CABLE ASSY - AUDIO, OMNI & XMTR SELECTOR SWITCHES

SIZE	CODE IDENT. NO.	
C	71379	1270801
SCALE: NONE	207	PAGE: 2.5.0

FORM NO. 80-221
ED&RR 10028 (SR5707) IX

NOTES:

1. OMNI 2 FUNCTION TO BE ON KEYWAY SIDE OF SWITCH

REVISION			
LET	DESCRIPTION	DATE	APPD

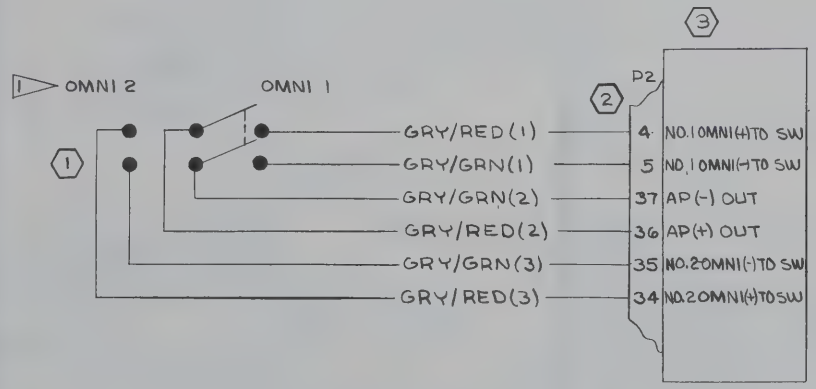

WIRE CODE NO.	GA	MATERIAL	LG	TERMINALS			SERIALS
GRY/RED(3)	22	-22-8-2		SOLDER	S-1837-1		
GRY/RED(2)	22	-22-8-2					
GRY/RED(1)	22	-22-8-2					
GRY/GRN(3)	22	-22-8-5					
GRY/GRN(2)	22	-22-8-5					
GRY/GRN(1)	22	-22-8-5		SOLDER	S-1837-1		

WIRE TABLE

ITEM NO.	PART NO.	DESCRIPTION	PAGE
3	0570084-1	JUNCTION BOX ASSY	7.11
2	S-1838-1	HOUSING	
1	S-1696-1	SWITCH	2.5.0

EQUIPMENT TABLE

CES-1000 IS APPLICABLE VENDOR CODES PER S-1400
CES-XXXX=CESSNA SPEC. NO.
S-XXX OR CMXXXX=CESSNA STD. NO.

SUPERSEDES:

SUPERSEDED BY:

CONTRACT NO:

	NAME	DATE
DESIGN	J. HENSHAW	10-11-68
GROUP	H Wild	10-17-68
DRAWN	SCRAPER	10-3-68
CHECK	RCAxtell	10-8-68
STRESS	R.F.GEIDE	10-11-68
PROJECT		10-18-68
APPD	SWANEY	10-10-68

Cessna AIRCRAFT CO.
COMMERCIAL AIRCRAFT DIV.
5800 E. PAWNEE
WICHITA, KANSAS

TITLE
WIRING DIAGRAM — AUTOPILOT OMNI SELECTOR SWITCH

SIZE	CODE IDENT. NO.	DWG NO.
C	71379	1270801

SCALE: NONE | 207 | PAGE: 2.5.1

FORM NO. 80-218A

ED&RR10028 (SR5707) IX

REVISION			
LET	DESCRIPTION	DATE	APPD

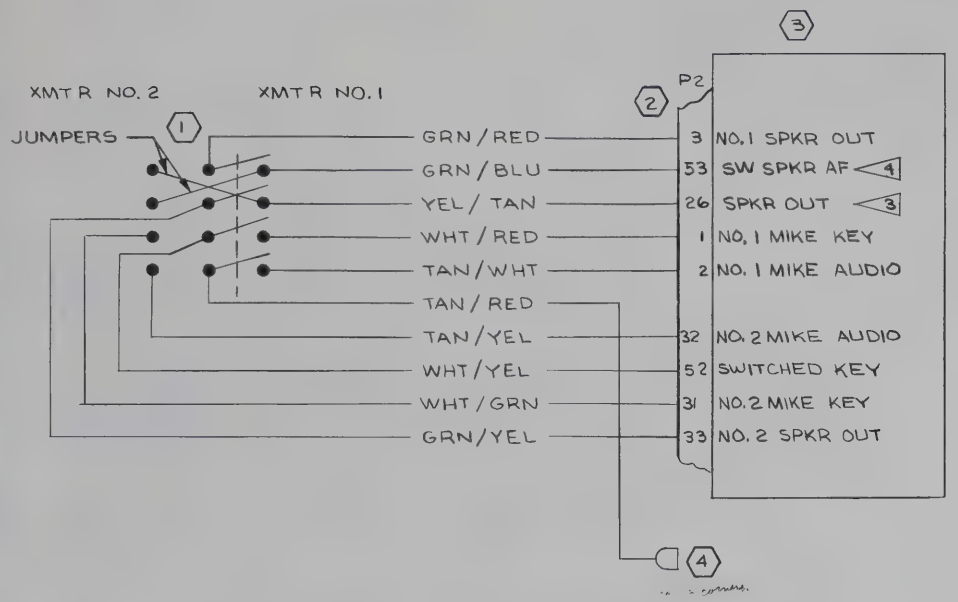

WIRE CODE NO.	GA	MATERIAL	LG	TERMINALS			SERIALS
YEL/TAN	20	20-4-10		SOLDER	S-1837-1		
WHT/YEL	22	22-9-4					
WHT/RED	22	22-9-2					
WHT/GRN	22	22-9-5					
TAN/YEL	22	22-10-4					
TAN/WHT	22	22-10-9			S-1837-1		
TAN/RED	22	22-10-2			S-1635-1		
GRN/YEL	20	20-5-4			S-1837-1		
GRN/BLU	20	20-5-6			S-1837-1		
GRN/RED	20	20-5-2		SOLDER	S-1837-1		

WIRE TABLE

NOTES:

1. TRANSMITTER NO. 1 IS ON KEYWAY SIDE OF SWITCH.
2. WHEN THIS SW IS INSTALLED WITH DUAL NARCOS, THERE IS NO CONNECTION TO PINS 3, 26, 53, 33
3. PIN 26 CONNECTS DIRECTLY TO 10 Ω RESISTOR ON PRINTED CIRCUIT BOARD
4. PIN 53 CONN TO RELAY WIPER CONTACTS THEN TO ACFT SPKR VIA PIN 51. WHEN RELAY IS ACTUATED, PIN 53 CONN TO 10 Ω RESISTOR ON PRINTED CIRCUIT BOARD

ITEM NO.	PART NO.	DESCRIPTION	PAGE
4	S-1637-1	HOUSING-SOCKET	
3	0570084-1	JUNCTION BOX ASSY	7.11
2	S-1838-1	HOUSING	
1	S-1697-1	SWITCH	2.5.0

EQUIPMENT TABLE

CES-1000 IS APPLICABLE VENDOR CODES PER S-1400
CES-XXXX=CESSNA SPEC. NO.
S-XXX OR CMXXXX=CESSNA STD. NO.

SUPERSEDES:

SUPERSEDED BY:

CONTRACT NO:

	NAME	DATE
DESIGN	J. HENSHAW	10-17-68
GROUP	H. Wise	10-19-68
DRAWN	L. SCRAPER	10-3-68
CHECK	RCA TELL	10-9-68
STRESS	R.F. GEIDE	10-11-68
PROJECT		10-21-68
APPD	SWANEY	10-10-68

Cessna AIRCRAFT CO.
COMMERCIAL AIRCRAFT DIV.
5800 E. PAWNEE
WICHITA, KANSAS

TITLE
WIRING DIAGRAM —
TRANSMITTER SELECTOR SWITCH

SIZE	CODE IDENT. NO.	DWG NO.
C	71379	1270801

SCALE: NONE | 207 | PAGE 2.5.2

FORM NO. 80-215A

ED#RR 10028 (SR 5707) IV

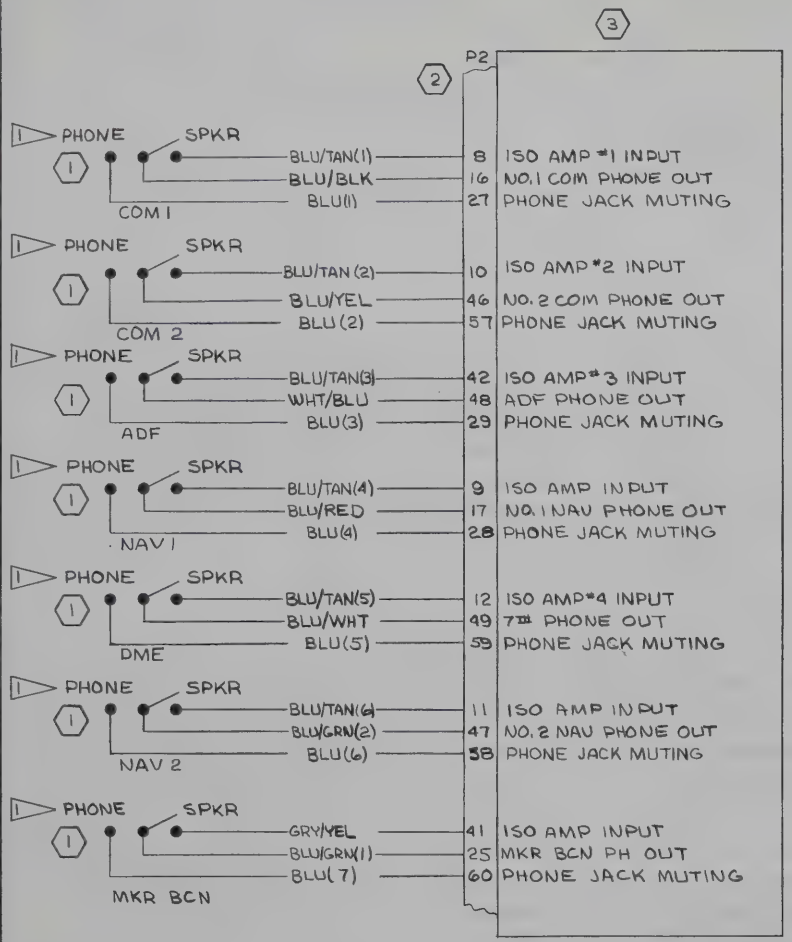

REVISION			
LET	DESCRIPTION	DATE	APPD

WIRE CODE NO.	GA	MATERIAL	LG	TERMINALS		SERIALS
BLU/GRN(2)	22	-22-6-S		S-1837-1	SOLDER	
BLU/GRN(1)	↑	-22-6-S		↑	↑	
BLU(7)		-22-6				
BLU/WHT		-22-6-9				
WHT/BLU		-22-9-6				
GRY/YEL		-22-8-4				
BLU/YEL		-22-6-4				
BLU/RED		-22-6-2				
BLU/BLK		-22-6-0				
BLU/TAN(6)		-22-6-10				
BLU/TAN(5)		-22-6-10				
BLU/TAN(4)		-22-6-10				
BLU/TAN(3)		-22-6-10				
BLU/TAN(2)		-22-6-10				
BLU/TAN(1)		-22-6-10				
BLU(6)		-22-6				
BLU(5)		-22-6				
BLU(4)		-22-6				
BLU(3)		-22-6				
BLU(2)	↓	-22-6		↓	↓	
BLU(1)	22	-22-6		S-1837-1	SOLDER	

WIRE TABLE

ITEM NO.	PART NO.	DESCRIPTION	PAGE
3	0570084-1	JUNCTION BOX ASSY	7.11
2	S-1838-1	HOUSING	2.10.0
1	S-1695-2	SWITCH	2.5.0

EQUIPMENT TABLE

CES-1000 IS APPLICABLE VENDOR CODES PER S-1400
CES-XXXX=CESSNA SPEC. NO.
S-XXX OR CMXXXX=CESSNA STD. NO.

SUPERSEDES:

SUPERSEDED BY:

CONTRACT NO:

	NAME	DATE
DESIGN	J. HENSHAW	10-11-68
GROUP	H Wire	10-17-68
DRAWN	L. SCRAPER	10-3-68
CHECK	RCA XTELL	10-9-68
STRESS	R.F SEIDE	10-11-68
PROJECT	Walker	10-14-68
APPD	SWANEY	10-10-68

Cessna AIRCRAFT CO.
COMMERCIAL AIRCRAFT DIV.
5800 E. PAWNEE
WICHITA, KANSAS

TITLE
WIRING DIAGRAM — AUDIO SELECTOR SWITCH

SIZE	CODE IDENT. NO.	DWG NO.
C	71379	1270801

SCALE: NONE | 207 | PAGE: 2.5.3

FORM NO. 80-213A

ED#RR 10028 (SR5707)

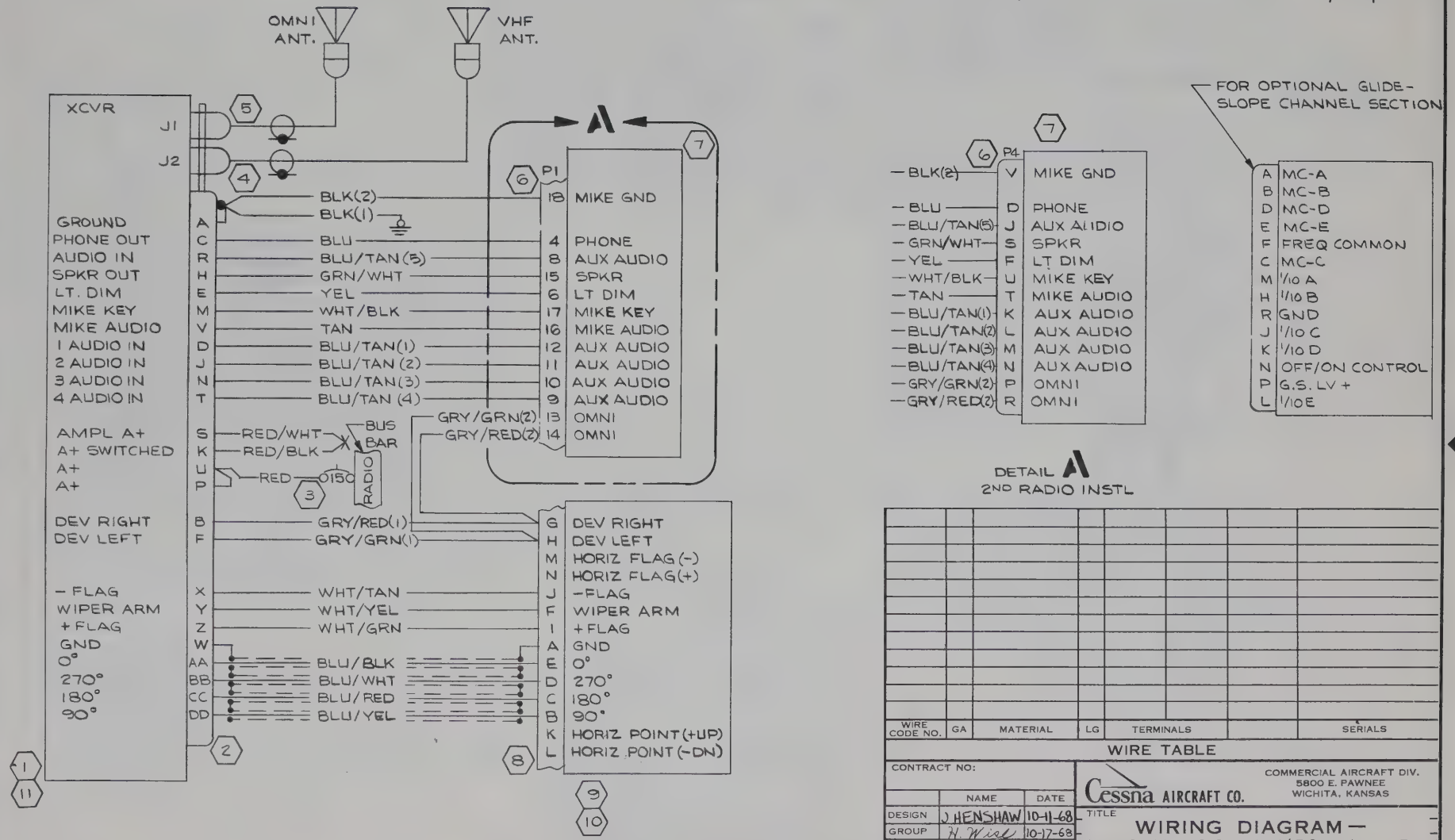

REVISION			
LET	DESCRIPTION	DATE	APPD

WIRE CODE NO.	GA	MATERIAL	LG	TERMINALS		SERIALS

WIRE TABLE

ITEM NO.	PART NO.	DESCRIPTION
		EQUIPMENT TABLE

CES-1000 IS APPLICABLE
VENDOR CODES PER S-1400
CES-XXXX=CESSNA SPEC. NO.
S-XXX OR CMXXXX=CESSNA STD. NO.

SUPERSEDES:

SUPERSEDED BY:

CONTRACT NO:

	NAME	DATE
DESIGN	J HENSHAW	10-11-68
GROUP	H. Wiest	10-17-68
DRAWN	L. SCRAPER	10-3-68
CHECK	RCAxtell	10-9-68
STRESS	R.E.GEIDE	10-11-68
PROJECT		10-18-68
APPD	SWANEY	10-10-68

Cessna AIRCRAFT CO.
COMMERCIAL AIRCRAFT DIV.
5800 E. PAWNEE
WICHITA, KANSAS

TITLE
WIRING DIAGRAM —
CESSNA 300 NAV/COM (TYPE 540A, 517R WITH IN525A & IN514)

SIZE	CODE IDENT. NO.	DWG NO.
C	71379	1270801

SCALE: NONE | 207 | PAGE: 2.6.1.1

FORM NO. 80-215A

EDERR 10028 (SR5707) IX

REVISION			
LET	DESCRIPTION	DATE	APPD

NOTES:

1. ON SINGLE CESSNA COMM INSTL, RED/BLK WIRE (PIN K) IS CONNECTED TO RED/WHT WIRE (PIN S) WITH AN S-1370-1 SPLICE. WHEN 300 COMM IS INSTL WITH OTHER RADIOS, RED/WHT WIRE CONNECTS TO CKT BKR AS SHOWN. RED/BLK WIRE IS TERMINATED WITH S-1557-1 CAP
2. BLACK 16GA WIRE IS HALVED, 1/2 SOLDERS TO PIN A, 1/2 SOLDERS TO TERMINAL LUG

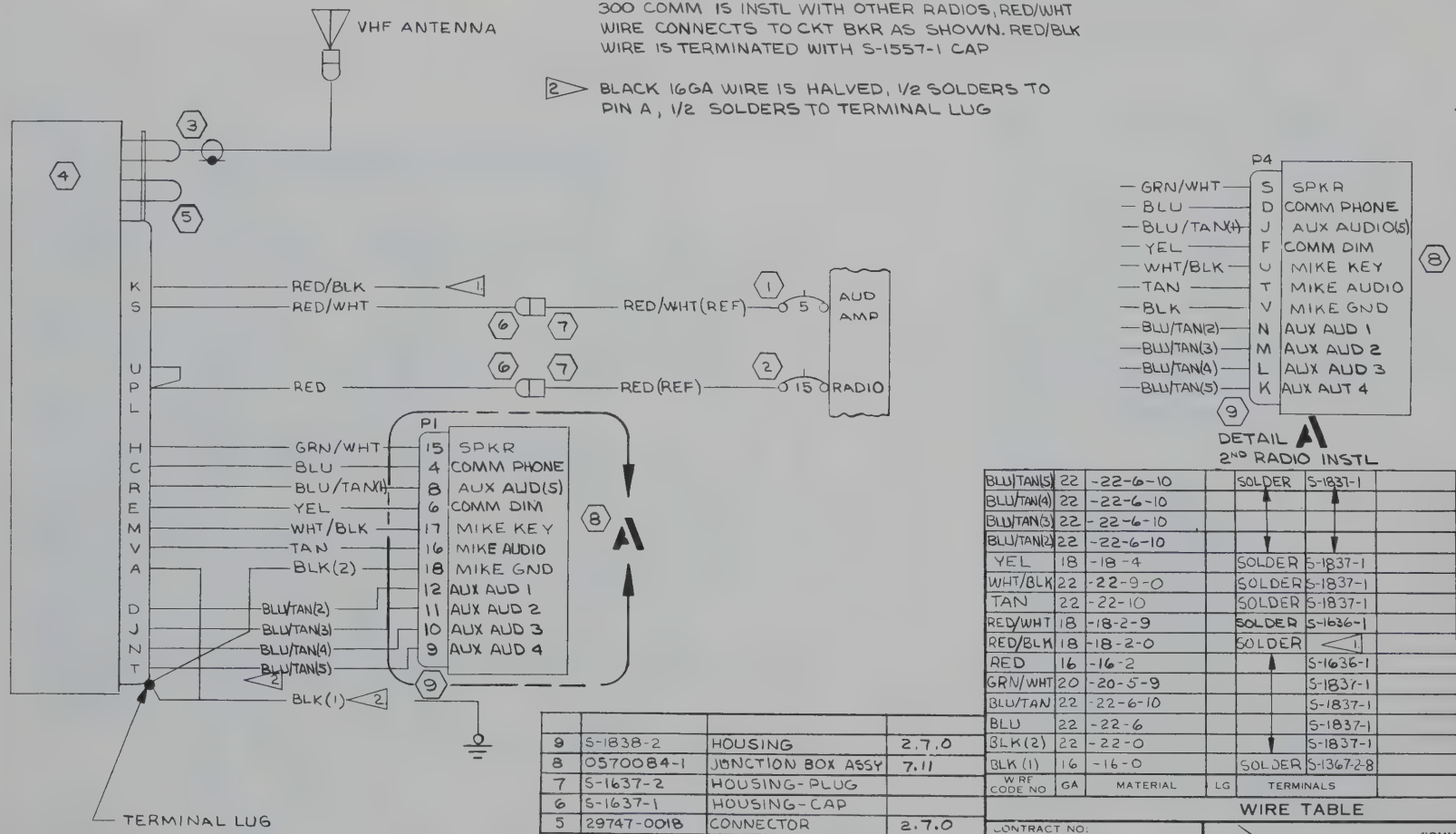

DETAIL A
2ND RADIO INSTL

WIRE CODE NO	GA	MATERIAL	LG	TERMINALS		SERIALS
BLU/TAN(5)	22	-22-6-10		SOLDER	S-1837-1	
BLU/TAN(4)	22	-22-6-10				
BLU/TAN(3)	22	-22-6-10				
BLU/TAN(2)	22	-22-6-10				
YEL	18	-18-4		SOLDER	S-1837-1	
WHT/BLK	22	-22-9-0		SOLDER	S-1837-1	
TAN	22	-22-10		SOLDER	S-1837-1	
RED/WHT	18	-18-2-9		SOLDER	S-1636-1	
RED/BLK	18	-18-2-0		SOLDER	1	
RED	16	-16-2			S-1636-1	
GRN/WHT	20	-20-5-9			S-1837-1	
BLU/TAN	22	-22-6-10			S-1837-1	
BLU	22	-22-6			S-1837-1	
BLK(2)	22	-22-0			S-1837-1	
BLK(1)	16	-16-0		SOLDER	S-1367-2-8	

WIRE TABLE

ITEM NO	PART NO.	DESCRIPTION	PAGE
9	S-1838-2	HOUSING	2.7.0
8	0570084-1	JUNCTION BOX ASSY	7.11
7	S-1637-2	HOUSING-PLUG	
6	S-1637-1	HOUSING-CAP	
5	29747-0018	CONNECTOR	2.7.0
4	31390-1514	RCVR/XMTR (ARC TYPE 524A)	3.3
3	29753	CONNECTOR	2.7.0
2	S-1360-15	CIRCUIT BKR	3.3
1	S-1360-5	CIRCUIT BKR	3.3

EQUIPMENT TABLE

CES-1000 IS APPLICABLE VENDOR CODES PER S-1400
CES-XXXX=CESSNA SPEC. NO.
S-XXX OR CMXXXX=CESSNA STD. NO.

SUPERSEDES:

SUPERSEDED BY:

CONTRACT NO:

	NAME	DATE
DESIGN	J. HENSHAW	10-14-68
GROUP	R. Wise	10-19-68
DRAWN	SCRAPER	10-4-68
CHECK	RCA/TELL	10-9-68
STRESS	R.F. GEIDE	10-11-68
PROJECT		10-22-68
APPD	SWANEY	10-10-68

Cessna AIRCRAFT CO.
COMMERCIAL AIRCRAFT DIV.
5800 E. PAWNEE
WICHITA, KANSAS

TITLE
WIRING DIAGRAM — CESSNA 300 COMM (ARC TYPE 524A)

SIZE	CODE IDENT. NO.	DWG NO.
C	71379	1270801

SCALE: NONE | 207 | PAGE: 2.7.1

FORM NO 80 215A

REVISIONS			
LTR	DESCRIPTION	DATE	APPROVED

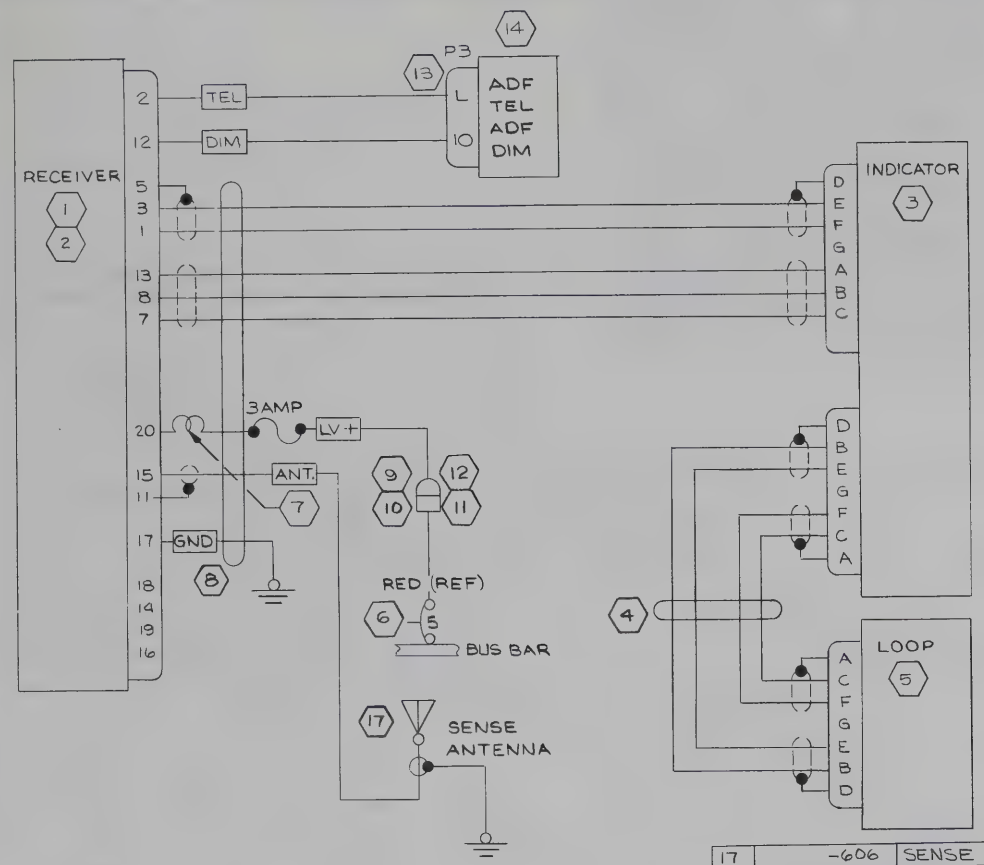

NOTES:

1 CONNECTIONS SHOWN ARE FOR TOP MOUNTING SENSE AND BOTTOM MOUNTING LOOP ANTENNA

2 ALL WIRES ARE VENDOR FURNISHED WITH RCVR EXCEPT CHOKE IN CIRCUIT BETWEEN PIN 20 & THE FUSEHOLDER WHICH MUST BE ADDED ON INSTL IN AIRCRAFT

ITEM NO.	PART NO.	DESCRIPTION
17	-606	SENSE ANT INSTL
16	S-1695-2	SWITCH
14	0570084-1	JUNCTION BOX
13	S-1838-3	HOUSING
12	S-1637-2	HOUSING-PLUG
11	S-1637-1	HOUSING-CAP
10	S-1635-1	PIN
9	S-1636-1	SOCKET
8	32802-1014	CABLE ASSY
7	A-263	CHOKE
6	S-1360-5	CIRCUIT BREAKER
5	32880-0100	LOOP ANT
4	33827	LOOP CABLE
3	32680-0000	IND (ARC TYPE IN-521B)
2	35700-1000	RCVR (ARC TYPE R-521B)
1	35700-1100	RCVR (ARC TYPE R-521B)

EQUIPMENT TABLE

WIRE CODE NO.	GA	MATERIAL	LG	TERMINALS		SERIALS

WIRE TABLE

CONTRACT NO:	NAME	DATE
DESIGN	HENSHAW	10-14-68
GROUP	H. Wise	10-17-68
DRAWN	L. Scraper	10-3-68
CHECK	RCAxtell	10-9-68
STRESS	R.F. GEIDE	10-11-68
PROJECT	[illegible]	10 18 68
APPD	SWANEY	10-10-68

Cessna AIRCRAFT CO.
COMMERCIAL AIRCRAFT DIV.
5800 E. PAWNEE
WICHITA, KANSAS

TITLE
WIRING DIAGRAM —
CESSNA 300 ADF
(ARC TYPE 521B)

SIZE	CODE IDENT. NO.	DWG NO.
C	71379	1270801

SCALE: NONE | 207 | PAGE: 2.8

FORM NO 80-215

ED&RR 10028 (SR5707) IX

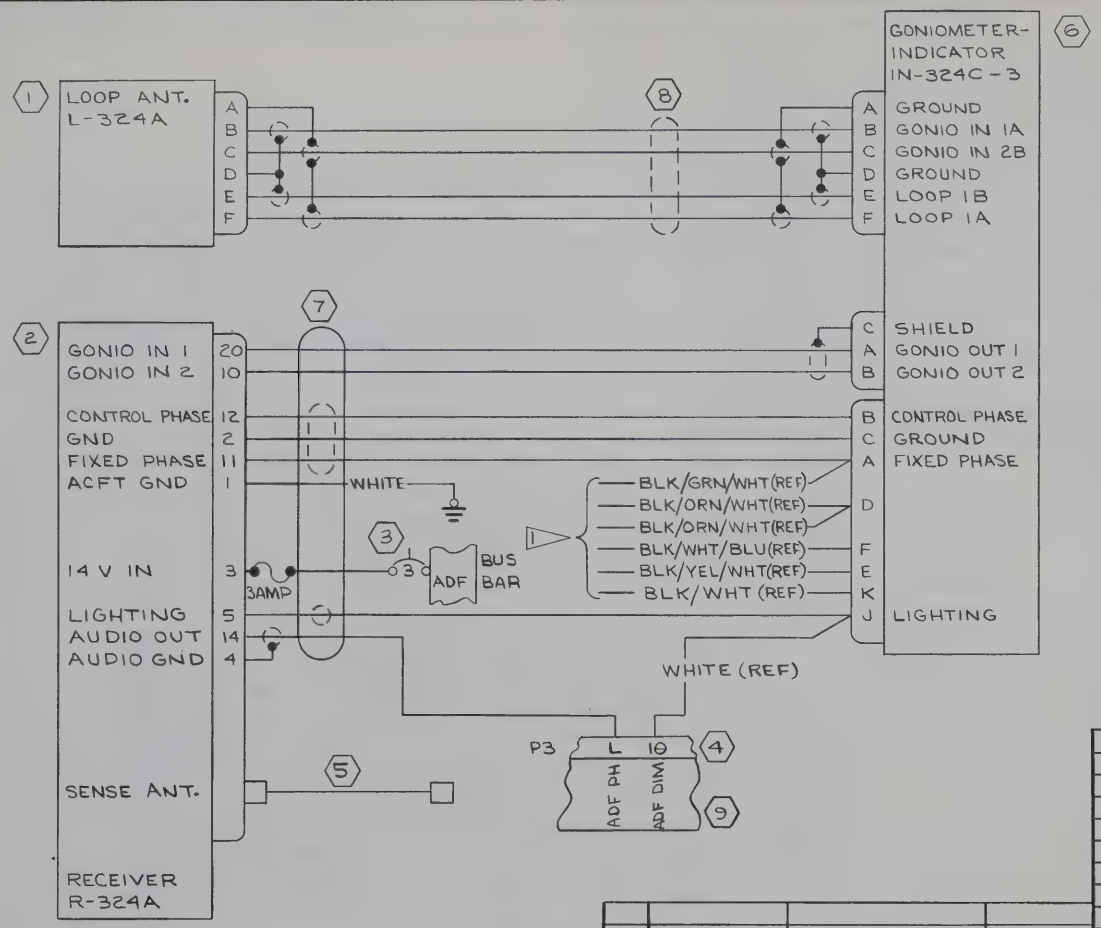

NOTES:

1. THESE WIRES TO BE CUT & CAPPED APPROX 2 IN. FROM PLUG

REVISION			
LET	DESCRIPTION	DATE	APPD

ITEM NO.	PART NO.	DESCRIPTION	PAGE
9	0570084-1	JUNCTION BOX ASSY	7.11
8	33827-0000	LOOP CABLE ASSY	6.3
7	38422-0014	CABLE ASSY	3.8
6	38450-0003	GONIOMETER IND	3.8
5	-216	CABLE ASSY	2.9.0
4	S-1838-3	HOUSING	
3	S-1360-5	CIRCUIT BKR	3.8
2	36380-1000	RECEIVER	3.8
1	36420-1100	LOOP ANT.	6.3

EQUIPMENT TABLE

WIRE CODE NO.	GA.	MATERIAL	LG	TERMINALS		SERIALS

WIRE TABLE

CES-1000 IS APPLICABLE
VENDOR CODES PER S-1400
CES-XXXX=CESSNA SPEC. NO.
S-XXX OR CMXXXX=CESSNA
STD. NO.

SUPERSEDES:

SUPERSEDED BY:

CONTRACT NO:

	NAME	DATE
DESIGN	HENSHAW	10-17-68
GROUP	N. Wiel	10-17-68
DRAWN	L. SCRAPER	10-9-68
CHECK	RCA YTELL	10-9-68
STRESS	R.F. GEIDE	10-11-68
PROJECT		10-18-68
APPD	SWANEY	10-10-68

Cessna AIRCRAFT CO.
COMMERCIAL AIRCRAFT DIV.
5800 E. PAWNEE
WICHITA, KANSAS

TITLE
WIRING DIAGRAM —
CESSNA 400 ADF
(ARC TYPE 324A)

SIZE	CODE IDENT. NO.	DWG NO.
C	71379	1270801

SCALE: NONE | 207 | PAGE: 2.9.1

FORM NO. 80-215A

ED & RR 10028 (SR5707) IX

REVISION			
LET	DESCRIPTION	DATE	APPD
A	BY REV: S-1696-2 WAS S-1696-1; ADD -237 & NOTE 2 ED&RR 10385	FER 2-18-69	JWH MDS KFG H/W JDH

NOTES:

1. "PHONE" & "LO" FUNCTION TO BE ON KEY WAY SIDE OF SW
2. PART OF -237 CABLE ASSY

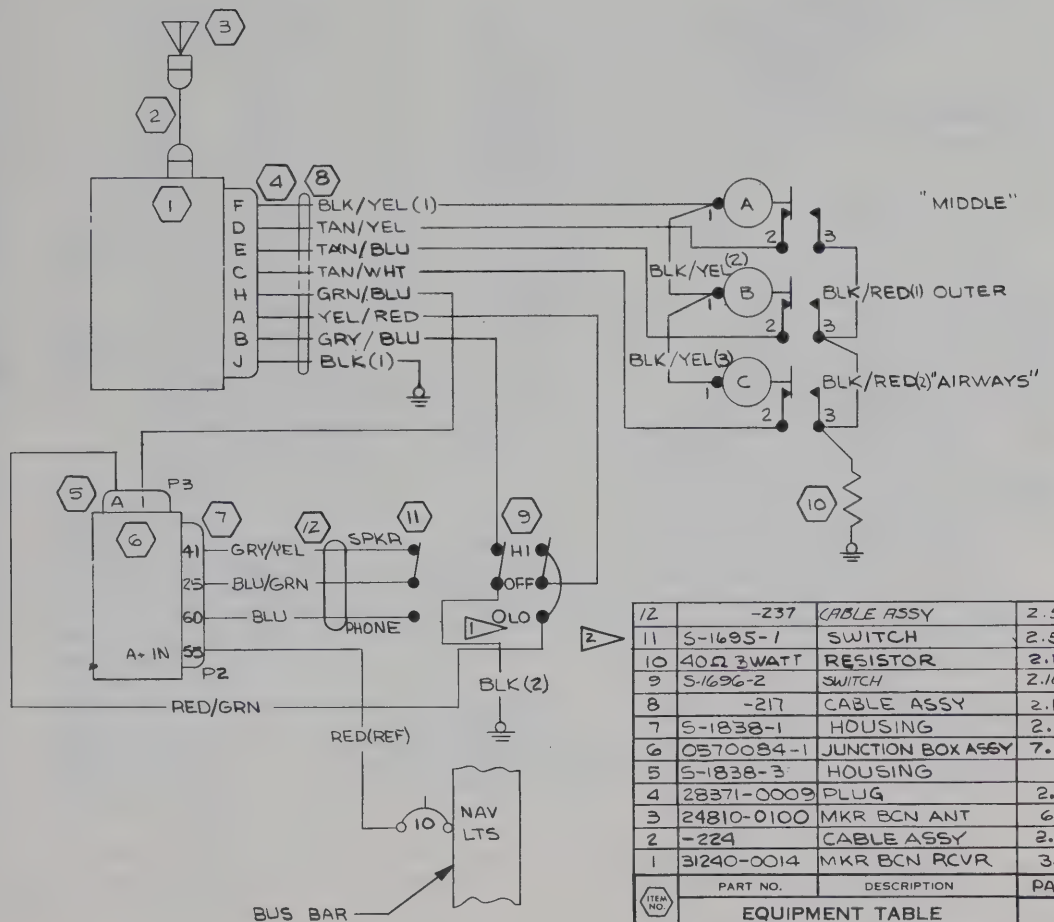

ITEM NO.	PART NO.	DESCRIPTION	PAGE
12	-237	CABLE ASSY	2.5.0
11	S-1695-1	SWITCH	2.5.0
10	40Ω 3WATT	RESISTOR	2.10.0
9	S-1696-2	SWITCH	2.10.0
8	-217	CABLE ASSY	2.10.0
7	S-1838-1	HOUSING	2.10.0
6	0570084-1	JUNCTION BOX ASSY	7.11
5	S-1838-3	HOUSING	
4	28371-0009	PLUG	2.10.0
3	24810-0100	MKR BCN ANT	6.4
2	-224	CABLE ASSY	2.16
1	31240-0014	MKR BCN RCVR	3.4

EQUIPMENT TABLE

WIRE CODE NO.	GA	MATERIAL	LG	TERMINALS			SERIALS
BLK/RED(2)	22	-22-0-2		SOLDER	SOLDER		
BLK/RED(1)	22	-22-0-2		SOLDER	SOLDER		
YEL/RED	20	-20-4-2		SOLDER	SOLDER		
TAN/YEL	22	-22-10-4			SOLDER		
TAN/WHT	22	-22-10-9			SOLDER		
TAN/BLU	22	-22-10-6			SOLDER		
RED/GRN	22	-22-2-5			S-1837-1		
GRY/YEL	22	-22-8-4			S-1837-1		
GRY/BLU	22	-22-8-6			SOLDER		
GRN/BLU	20	-20-5-6			S-1837-1		
BLU/GRN	22	-22-6-5			S-1837-1		
BLU	22	-22-6			S-1837-1		
BLK/YEL(3)	22	-22-0-4			SOLDER		
BLK/YEL(2)	22	-22-0-4			SOLDER		
BLK/YEL(1)	22	-22-0-4			SOLDER		
BLK(2)	22	-22-0		SOLDER	S-1367-1-8		
BLK(1)	22	-22-0		SOLDER	S-1367-1-8		

WIRE TABLE

CES-1000 IS APPLICABLE
VENDOR CODES PER S-1400
CES-XXXX=CESSNA SPEC. NO.
S-XXX OR CMXXXX=CESSNA STD. NO.

SUPERSEDES:

SUPERSEDED BY:

CONTRACT NO:

	NAME	DATE
DESIGN	HENSHAW	10-14-68
GROUP	H Wise	10-17-68
DRAWN	L. SCRAPER	10-4-68
CHECK	RCAXTELL	10-9-68
STRESS	R.F. GEIDE	10-11-68
PROJECT	[illegible]	10-18-68
APPD	SWANEY	10-10-68

Cessna AIRCRAFT CO.
COMMERCIAL AIRCRAFT DIV.
5800 E. PAWNEE
WICHITA, KANSAS

TITLE
WIRING DIAGRAM — CESSNA 300 MARKER BEACON (TYPE R-502B)

SIZE	CODE IDENT. NO.	DWG NO.
C	71379	1270801

SCALE: NONE | 207 | PAGE 2.11.1

FORM NO 80-215A

ED&RR 10028 (SR5707) II

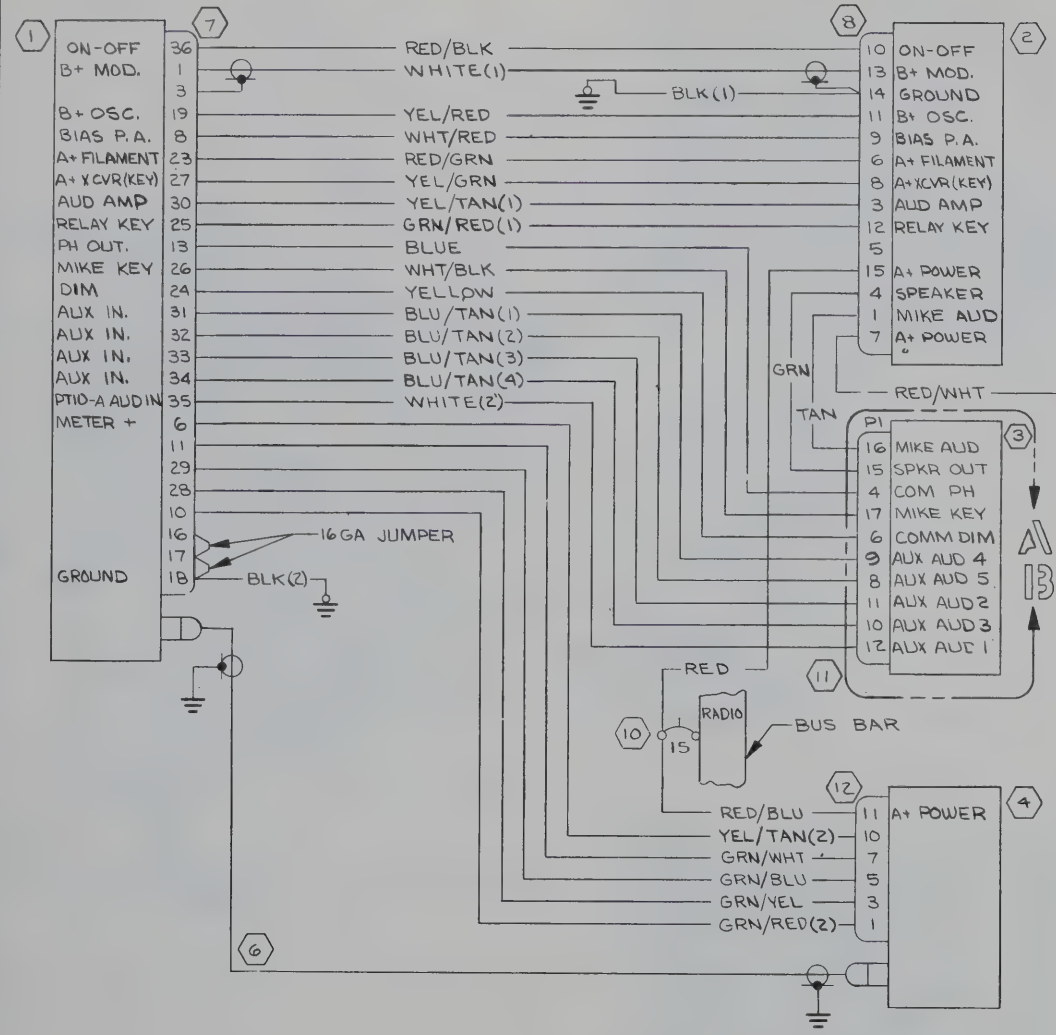

REVISION			
LET	DESCRIPTION	DATE	APPD

WIRE CODE NO.	GA	MATERIAL	LG	TERMINALS		SERIALS

WIRE TABLE

ITEM NO.	PART NO.	DESCRIPTION

EQUIPMENT TABLE

CES-1000 IS APPLICABLE VENDOR CODES PER S-1400
CES-XXXX=CESSNA SPEC. NO.
S-XXX OR CMXXXX=CESSNA STD. NO.

SUPERSEDES:

SUPERSEDED BY:

CONTRACT NO:

	NAME	DATE
DESIGN	HENSHAW	10-17-68
GROUP	H. Wise	10-18-68
DRAWN	SCRAPER	10-7-68
CHECK	RCAXTELL	10-8-68
STRESS	R.F. GEIDE	10-11-68
PROJECT		10-22-68
APPD	SWANSEY	10-10-68

Cessna AIRCRAFT CO.
COMMERCIAL AIRCRAFT DIV.
5800 E. PAWNEE
WICHITA, KANSAS

TITLE
WIRING DIAGRAM —
CESSNA 300 HF

SIZE	CODE IDENT. NO.	DWG NO.
C	71379	1270801

SCALE: NONE | 207 | PAGE: 2.13.1.1

FORM NO 80-215A

EDRR 10028 (SR5707)II

REVISION			
LET	DESCRIPTION	DATE	APPD

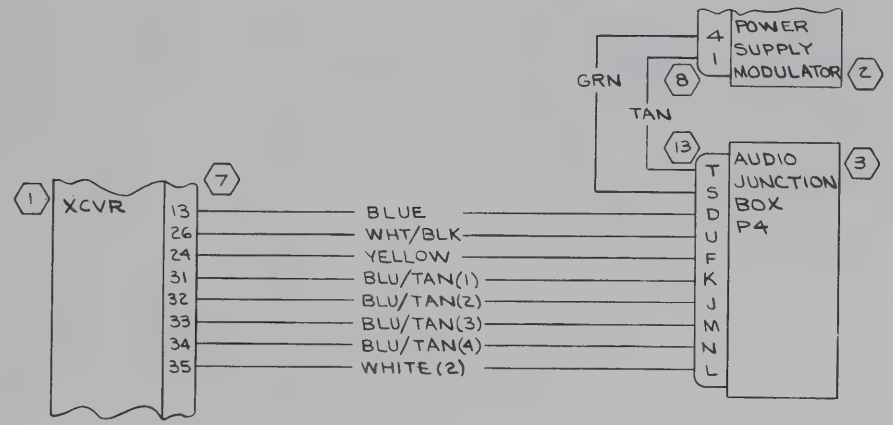

DETAIL A
2ND INSTL

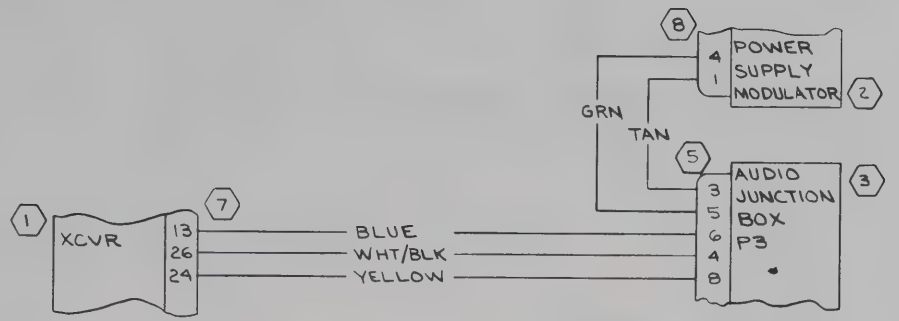

DETAIL B
3RD INSTL
(BLU/TAN & WHITE(2) WIRES TO BE CAPPED ON 3RD INSTL)

WIRE CODE NO.	GA	MATERIAL	LG	TERMINALS		SERIALS

WIRE TABLE

ITEM NO	PART NO.	DESCRIPTION

EQUIPMENT TABLE

CES-1000 IS APPLICABLE VENDOR CODES PER S-1400
CES-XXXX=CESSNA SPEC. NO.
S-XXX OR CMXXXX=CESSNA STD. NO.

SUPERSEDES:

SUPERSEDED BY:

CONTRACT NO:

	NAME	DATE
DESIGN	HENSHAW	10-14-68
GROUP	Z. Wise	10-19-68
DRAWN	L. SCRAPER	10-1-68
CHECK	RCAxtell	10-9-68
STRESS	R.F. GEIDE	10-11-68
PROJECT	[illegible]	10-22-68
APPD	SWANEY	10-10-68

Cessna AIRCRAFT CO.
COMMERCIAL AIRCRAFT DIV.
5800 E. PAWNEE
WICHITA, KANSAS

TITLE
WIRING DIAGRAM —
CESSNA 300 HF

SIZE	CODE IDENT. NO.	DWG NO.
C	71379	1270801

SCALE: NONE	207	PAGE: 2.13.1.2

FORM NO. 80-215A

ED•RR 10028 (SR5707) IX

REVISION			
LET	DESCRIPTION	DATE	APPD

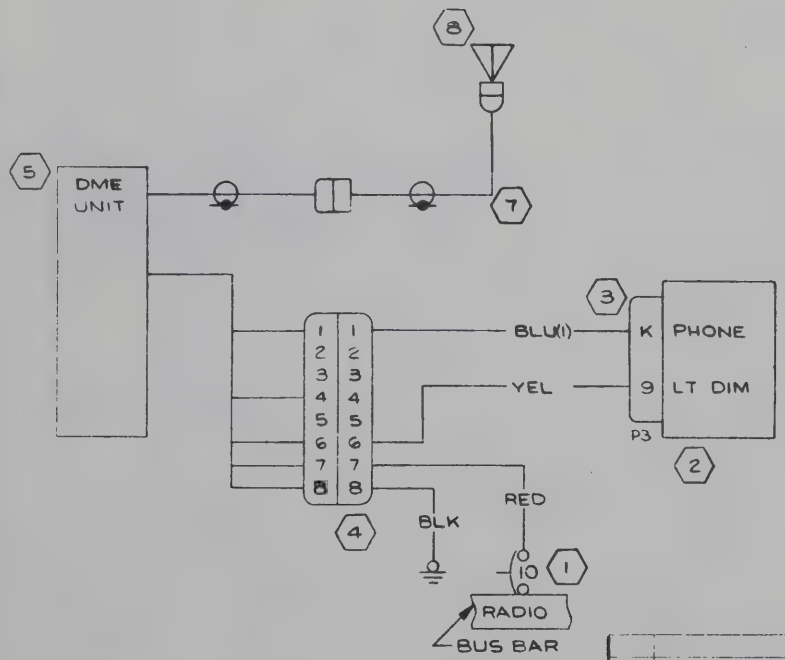

8	KA-32	ANTENNA	6.7
7	-235	CABLE ASSY	2.14
6			
5	C582602-0101	DME UNIT	3.6
4	030-2043-00	CONNECTOR	2.15.0
3	S-1838-3	HOUSING	2.15.0
2	0570084-1	JUNCTION BOX	7.11
1	S-1360-10	CKT BKR	3.6
	PART NO	DESCRIPTION	PAGE

EQUIPMENT TABLE

WIRE CODE NO	GA	MATERIAL	LG	TERMINALS			SERIALS
YEL	18	-18-4		SOLDER	S-1837-1		
RED	16	-16-2		SOLDER	S-1367-1-8		
BLU(1)	22	-22-6		SOLDER	S-1837-1		
BLK	16	-16-0		SOLDER	S-1367-2-8		

WIRE TABLE

CONTRACT NO

	NAME	DATE
DESIGN	HENSHAW	10-14-68
GROUP	H. Wise	10-18-68
DRAWN	SCRAPER	10-7-68
CHECK	RCAxtell	10-9-68
STRESS	[illegible]	[illegible]
PROJECT	[illegible]	[illegible]
APPD	SWANEY	10-10-68

Cessna AIRCRAFT CO.

COMMERCIAL AIRCRAFT DIV.
5800 E PAWNEE
WICHITA, KANSAS

TITLE
WIRING DIAGRAM — CESSNA 300 DME

SIZE	CODE IDENT. NO	DWG NO
C	71379	1270801

SCALE NONE | 207 | PAGE 2.15.1

SUPERSEDES

SUPERSEDED BY

ED&RK 10028 (SR5707) IX

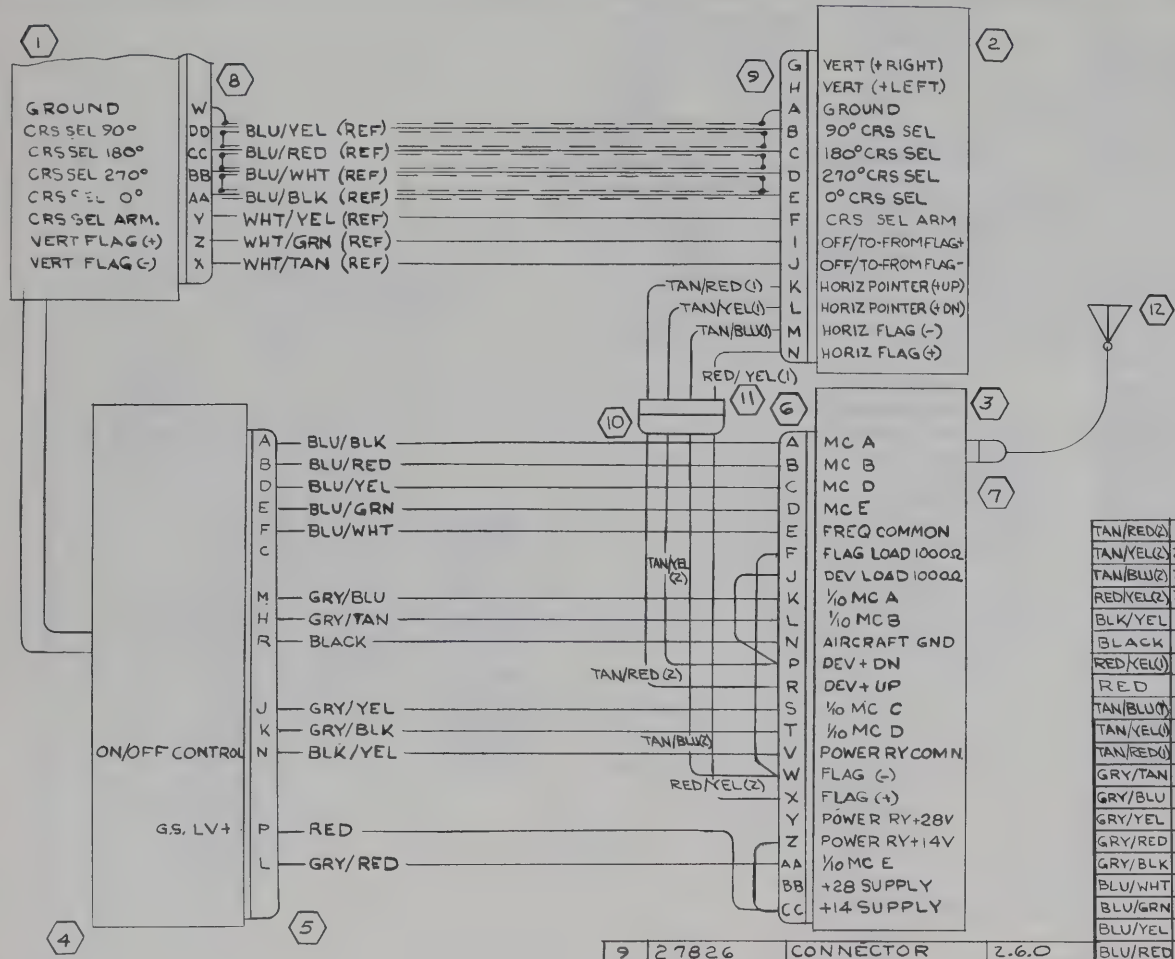

REVISION			
LET	DESCRIPTION	DATE	APPD

WIRE CODE NO.	GA	MATERIAL	LG	TERMINALS		SERIALS
TAN/RED(2)	22	-22-10-2		S-1635-1	SOLDER	
TAN/YEL(2)	22	-22-10-4		S-1635-1	SOLDER	
TAN/BLU(2)	22	-22-10-6		S-1635-1	SOLDER	
RED/YEL(2)	22	-22-2-4		S-1635-1	SOLDER	
BLK/YEL	22	-22-0-4		SOLDER	SOLDER	
BLACK	18	-18-0		SOLDER	SOLDER	
RED/YEL(1)	22	-22-2-4		SOLDER	S-1636-1	
RED	18	-18-2		SOLDER	SOLDER	
TAN/BLU(1)	22	-22-10-6			S-1636-1	
TAN/YEL(1)	22	-22-10-4			S-1636-1	
TAN/RED(1)	22	-22-10-2			S-1636-1	
GRY/TAN	22	-22-8-10			SOLDER	
GRY/BLU	22	-22-8-6				
GRY/YEL	22	-22-8-4				
GRY/RED	22	-22-8-2				
GRY/BLK	22	-22-8-0				
BLU/WHT	22	-22-6-9				
BLU/GRN	22	-22-6-5				
BLU/YEL	22	-22-6-4				
BLU/RED	22	-22-6-2				
BLU/BLK	22	-22-6-0		SOLDER	SOLDER	

WIRE TABLE

ITEM NO.	PART NO.	DESCRIPTION	PAGE
9	27826	CONNECTOR	2.6.0
8	29747-0026	CONNECTOR	2.6.0
7	11337	CONNECTOR	2.17.0
6	36194-0001	CONNECTOR KIT	2.17.0
5	36195	CONNECTOR KIT	2.17.0
4	36300-0000	CONNECTOR KIT	3.1
3	36440-0000	G.S RCVR(R-543B)	4.2
2	32350-0000	INDICATOR(IN525A)	3.1
1	37600-1114	XMTR/RCVR (RT-540A)	3.1

EQUIPMENT TABLE

ITEM NO.	PART NO.	DESCRIPTION	PAGE
12	1200098-1	ANTENNA	6-5
11	S-1641-9	HOUSING-SOCKET	2.16
10	S-1640-9	HOUSING-PIN	2.16

EQUIPMENT TABLE

CES-1000 IS APPLICABLE
VENDOR CODES PER S-1400
CES-XXXX=CESSNA SPEC. NO.
S-XXX OR CMXXXX=CESSNA
STD. NO.

SUPERSEDES:

SUPERSEDED BY:

CONTRACT NO:

	NAME	DATE
DESIGN	HENSHAW	10-11-68
GROUP	H. Wied	10-19-68
DRAWN	L. SCRAPER	10-7-68
CHECK	RCAXTELL	10-9-68
STRESS	R.F. GEIDE	10-11-68
PROJECT		10-22-68
APPD	SWANEY	10-10-68

Cessna AIRCRAFT CO.
COMMERCIAL AIRCRAFT DIV.
5800 E. PAWNEE
WICHITA, KANSAS

TITLE
WIRING DIAGRAM —
CESSNA 400 GLIDESLOPE
(ARC TYPE R-543B)

SIZE	CODE IDENT. NO.	DWG NO.
C	71379	1270801

SCALE: NONE | 207 | PAGE: 2.17.1

FORM NO. 80-215A

ED#RR10028 (SR5707) IX

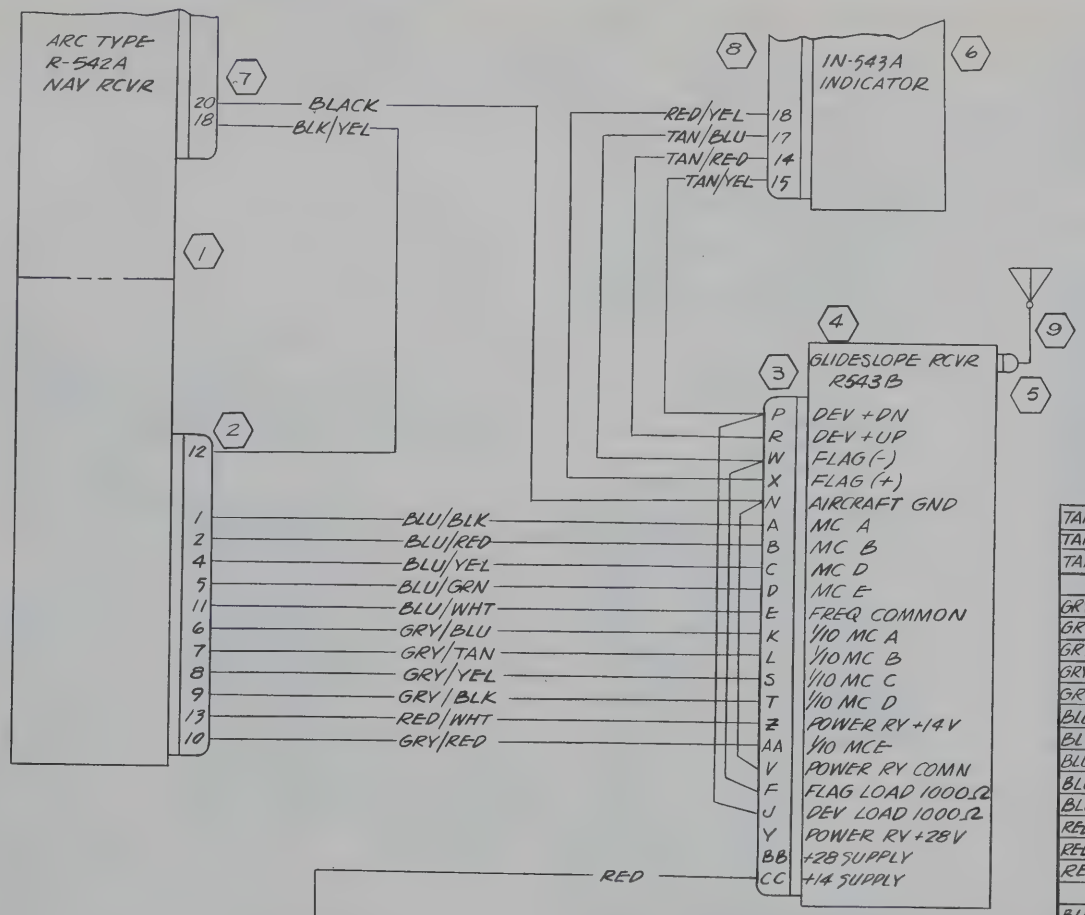

REVISION			
LET	DESCRIPTION	DATE	APPD

WIRE CODE NO.	GA	MATERIAL	LG	TERMINALS		SERIALS
TAN/BLU	22	-22-10-6		SOLDER	SOLDER	
TAN/YEL	22	-22-10-4		SOLDER	SOLDER	
TAN/RED	22	-22-10-2		SOLDER	SOLDER	
GRY/TAN	22	-22-8-10		SOLDER	SOLDER	
GRY/BLU		-22-8-6				
GRY/YEL		-22-8-4				
GRY/RED		-22-8-2				
GRY/BLK		-22-8-0				
BLU/WHT		-22-6-9				
BLU/GRN		-22-6-5				
BLU/YEL		-22-6-4				
BLU/RED		-22-6-2				
BLU/BLK		-22-6-0				
RED/YEL		-22-2-4				
RED/WHT	22	-22-2-9		SOLDER		
RED	18	-18-2		S-13671-8	SOLDER	
BLK/YEL	22	-22-0-4		SOLDER	SOLDER	
BLACK	18	-18-0		SOLDER	SOLDER	

WIRE TABLE

ITEM NO.	PART NO.	DESCRIPTION	PAGE
9	1200098-1	GLIDESLOPE ANT	6.5
8	34294-0425	CONNECTOR	
7	35693-0004	CONNECTOR	
6	34290-0000	INDICATOR (ARC IN-543)	3.9.0
5	11337	CONNECTOR	
4	36440-0000	G/S RCVR (ARC TYPE R-543B)	4.2
3	36194	CONNECTOR KIT	2.18.0
2	35548-0225	CONNECTOR	2.18.0
1	33560	NAV RCVR (ARC R-542)	

EQUIPMENT TABLE

CES-1000 IS APPLICABLE VENDOR CODES PER S-1400
CES-XXXX=CESSNA SPEC. NO.
S-XXX OR CMXXXX=CESSNA STD. NO.

SUPERSEDES:

SUPERSEDED BY:

CONTRACT NO:

	NAME	DATE
DESIGN	HENSHAW	10-14-68
GROUP	N. Wise	10-18-68
DRAWN	E Yarbrough	10-7-68
CHECK	RCA YELL	10-9-68
STRESS	R.F. GEIDE	10-11-68
PROJECT	[illegible]	10-22 GP
APPD	SWANEY	10-10-68

Cessna AIRCRAFT CO.
COMMERCIAL AIRCRAFT DIV.
5800 E. PAWNEE
WICHITA, KANSAS

TITLE
WIRING DIAGRAM — CESSNA 400 GLIDESLOPE (ARC TYPE R-543B)

SIZE	CODE IDENT. NO.	DWG NO.
C	71379	1270801

SCALE: NONE — 207 — PAGE: 2.18.1

FORM NO. 80-215A

ED&RR 10188 (SR5707) IX

REVISION			
LET	DESCRIPTION	DATE	APPD

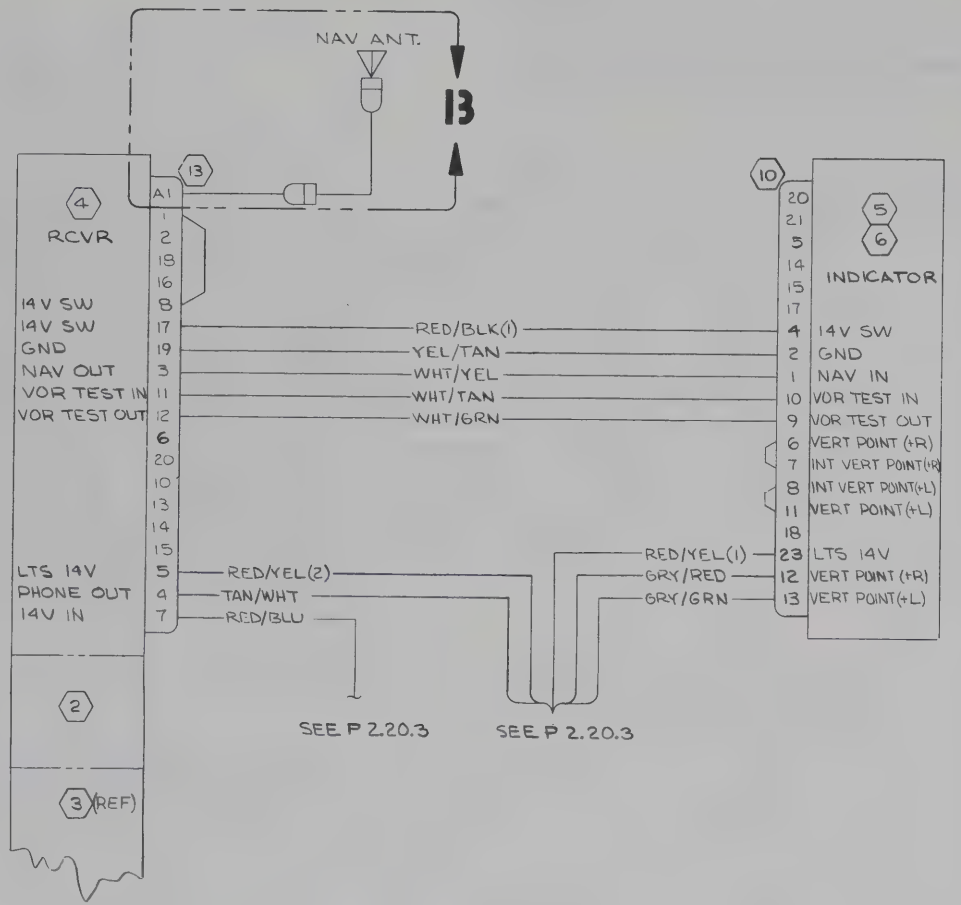

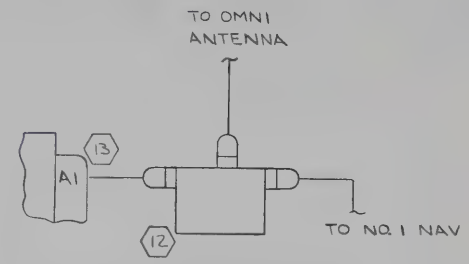

DETAIL 13
2ND INSTL

WIRE CODE NO.	GA	MATERIAL	LG	TERMINALS		SERIALS

WIRE TABLE

ITEM NO.	PART NO.	DESCRIPTION

EQUIPMENT TABLE

CES-1000 IS APPLICABLE
VENDOR CODES PER S-1400
CES-XXXX=CESSNA SPEC. NO.
S-XXX OR CMXXXX=CESSNA STD. NO.

SUPERSEDES:

SUPERSEDED BY:

CONTRACT NO:

	NAME	DATE
DESIGN	HENSHAW	10-14-68
GROUP	A. Wied	10-19-68
DRAWN	SCRAPER	10-7-68
CHECK	RCA/TEL	10-9-68
STRESS	REGEIDE	10-11-68
PROJECT	[illegible]	10-22-68
APPD	SWANEY	10-10-68

Cessna AIRCRAFT CO.
COMMERCIAL AIRCRAFT DIV.
5800 E. PAWNEE
WICHITA, KANSAS

TITLE
WIRING DIAGRAM—
CESSNA 400 NAV/COMM
(ARC TYPE RT-522A & RT-532A)

SIZE	CODE IDENT. NO.	DWG NO.
C	71379	1270801

SCALE: NONE | 207 | PAGE: 2.20.2

FORM NO. 80-215A

ED&RR 10028 (SR5707) IX

REVISION			
LET	DESCRIPTION	DATE	APPD

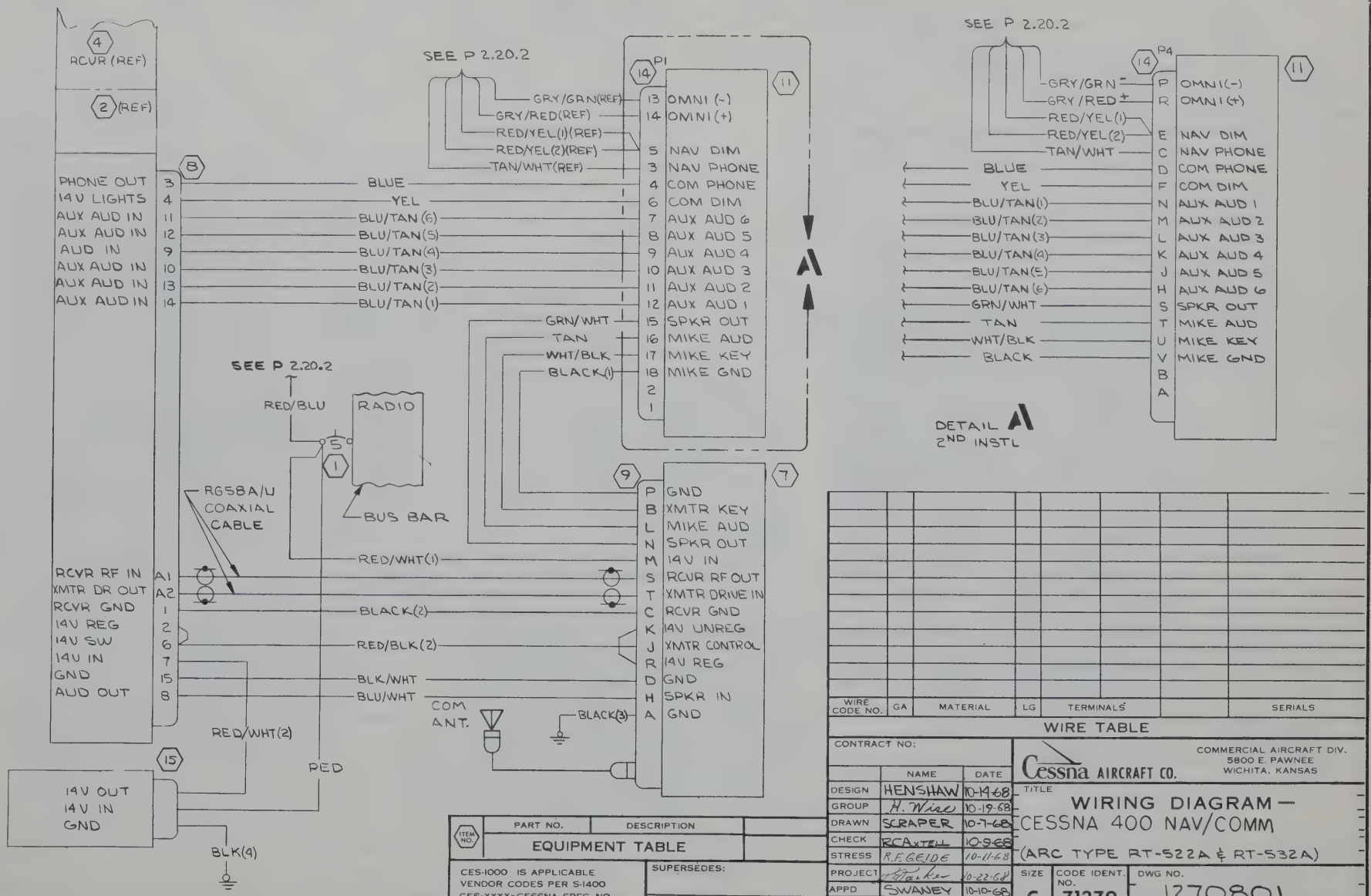

WIRE CODE NO.	GA	MATERIAL	LG	TERMINALS		SERIALS

WIRE TABLE

ITEM NO.	PART NO.	DESCRIPTION

EQUIPMENT TABLE

CES-1000 IS APPLICABLE VENDOR CODES PER S-1400
CES-XXXX=CESSNA SPEC. NO.
S-XXX OR CMXXXX=CESSNA STD. NO.

SUPERSEDES:

SUPERSEDED BY:

CONTRACT NO:

	NAME	DATE
DESIGN	HENSHAW	10-14-68
GROUP	H. Wise	10-19-68
DRAWN	SCRAPER	10-7-68
CHECK	RCA x TELL	10-9-68
STRESS	R.F. GEIDE	10-11-68
PROJECT	[illegible]	10-22-68
APPD	SWANEY	10-10-68

Cessna AIRCRAFT CO.
COMMERCIAL AIRCRAFT DIV.
5800 E. PAWNEE
WICHITA, KANSAS

TITLE
WIRING DIAGRAM —
CESSNA 400 NAV/COMM
(ARC TYPE RT-522A & RT-532A)

SIZE	CODE IDENT. NO.	DWG NO.
C	71379	1270801

SCALE: NONE | 207 | PAGE 2.20.3

FORM NO. AD 215A

ED&RR 10028 (SR5707) IX

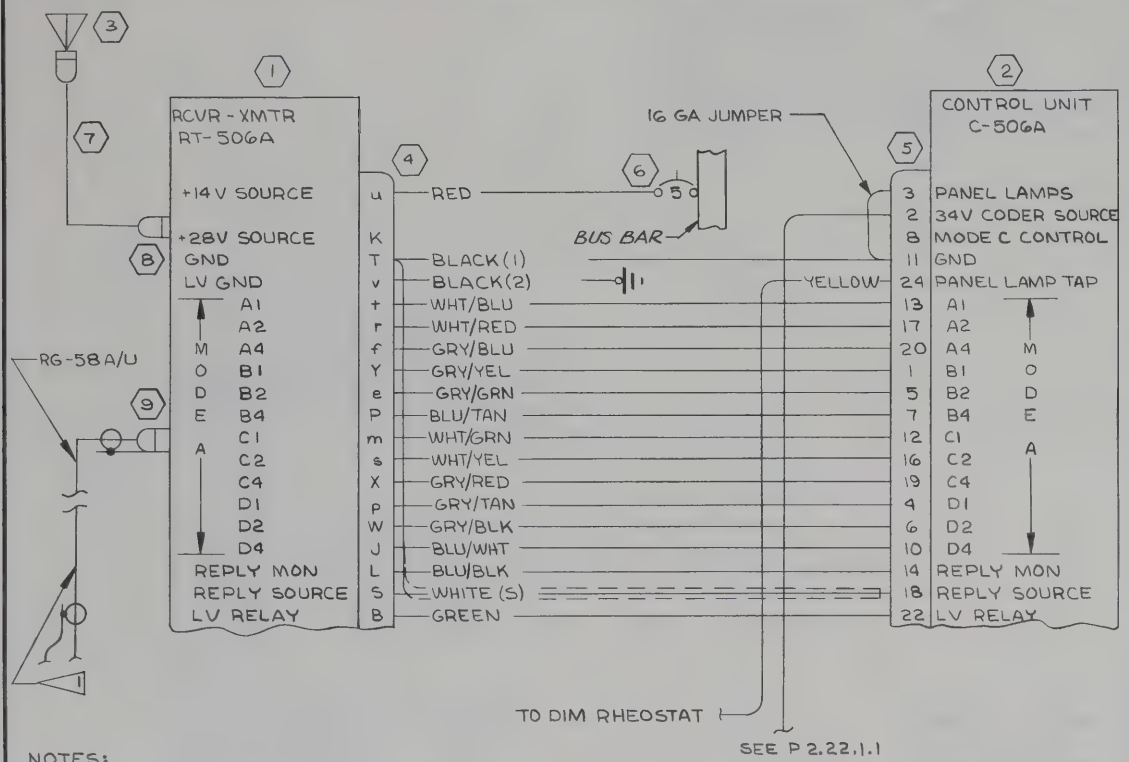

REVISION			
LET	DESCRIPTION	DATE	APPD

CABLE		RG-58A/U		UG-88C/U	1			
TAN	22	-22-10		SOLDER	SOLDER			
TAN/RED	22	-22-10-2						
TAN/YEL	22	-22-10-4						
TAN/WHT	22	-22-10-9						
TAN/BLU	22	-22-10-6						
YEL/GRN	20	-20-4-5						
YEL	20	-20-4						
GRN	20	-20-5						
WHT	20(S)	-20-9						
BLU/BLK	22	-22-6-0						
BLU/WHT	22	-22-6-9						
GRY/BLK	22	-22-8-0						
GRY/TAN	22	-22-8-10						
GRY/RED	22	-22-8-2						
WHT/YEL	22	-22-9-4						
WHT/GRN	22	-22-9-5						
BLU/TAN	22	-22-6-10						
GRY/GRN	22	-22-8-5						
GRY/YEL	22	-22-8-4						
GRY/BLU	22	-22-8-6						
WHT/RED	22	-22-9-2						
WHT/BLU	22	-22-9-6			SOLDER			
RED	18	-18-2			S-1367-2-8			
BLK(2)	18	-18-0			S-1367-2-8			
BLK(1)	22	-22-0		SOLDER	SOLDER			
WIRE CODE NO.	GA	MATERIAL	LG	TERMINALS				SERIALS

WIRE TABLE

ITEM NO.	PART NO.	DESCRIPTION	PAGE
9	11337	CONNECTOR	2.22.0
8	28776-0000	CONNECTOR	2.21
7	-215	CABLE ASSY-ANT.	2.21
6	S-1360-5	CIRCUIT BREAKER	3.11
5	37451-0002	CONNECTOR KIT	2.22.0
4	37449-0002	CONNECTOR KIT	2.22.0
3	34970-0000	ANTENNA	6.8
2	34960-1000	CONTROL UNIT	3.11
1	34950-0014	RCVR/XMTR	4.3

EQUIPMENT TABLE

CES-1000 IS APPLICABLE
VENDOR CODES PER S-1400
CES-XXXX=CESSNA SPEC. NO.
S-XXX OR CMXXXX=CESSNA
STD. NO.

SUPERSEDES:

SUPERSEDED BY:

CONTRACT NO:

	NAME	DATE
DESIGN	HENSHAW	10-14-68
GROUP	H. Wisb	10-19-68
DRAWN	L. SCRAPER	10-4-68
CHECK	RCAXTELL	10-9-68
STRESS	R.F.GEIDE	10-11-68
PROJECT		10-22-68
APPD	SWANEY	10-10-68

Cessna AIRCRAFT CO.
COMMERCIAL AIRCRAFT DIV.
5800 E. PAWNEE
WICHITA, KANSAS

TITLE
WIRING DIAGRAM — CESSNA 400 TRANSPONDER (ARC TYPE 506A)

SIZE	CODE IDENT. NO.	DWG NO.
C	71379	1270801

SCALE: NONE | 207 | PAGE: 2.22.1.0

FORM NO. 80-215A

ED&RR 10028 (SR 5707) IX

REVISION			
LET	DESCRIPTION	DATE	APPD

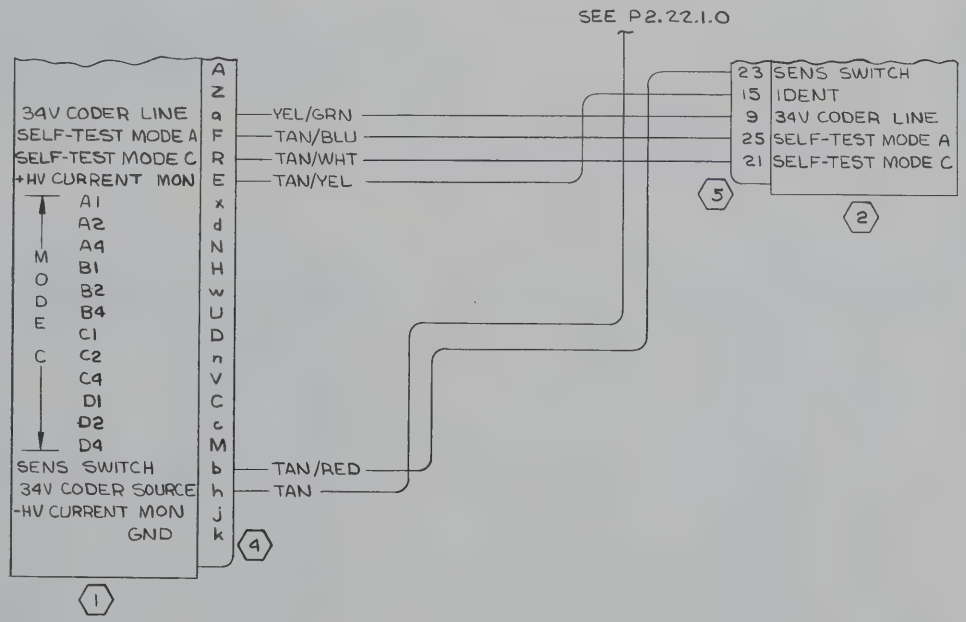

WIRE CODE NO.	GA	MATERIAL	LG	TERMINALS			SERIALS

WIRE TABLE

ITEM NO.	PART NO.	DESCRIPTION
		EQUIPMENT TABLE

CES-1000 IS APPLICABLE
VENDOR CODES PER S-1400
CES-XXXX=CESSNA SPEC. NO.
S-XXX OR CMXXXX=CESSNA STD. NO.

SUPERSEDES:

SUPERSEDED BY:

CONTRACT NO:

	NAME	DATE
DESIGN	HENSHAW	10-14-68
GROUP	H. Wise	10-19-68
DRAWN	L. SCRAPER	10-4-68
CHECK	RCA XTELL	10-9-68
STRESS	R.F. GEIDE	10-11-68
PROJECT		
APPD	SWANEY	10-10-68

Cessna AIRCRAFT CO.
COMMERCIAL AIRCRAFT DIV.
5800 E. PAWNEE
WICHITA, KANSAS

TITLE
WIRING DIAGRAM—
CESSNA 400 TRANSPONDER
(ARC TYPE 506A)

SIZE	CODE IDENT. NO.	DWG NO.
C	71379	1270801

SCALE: NONE | 207 | PAGE: 2.22.1.1

FORM NO. 80-218A

ED#RR 10028 (SR5707) IX

REVISION			
LET	DESCRIPTION	DATE	APPD

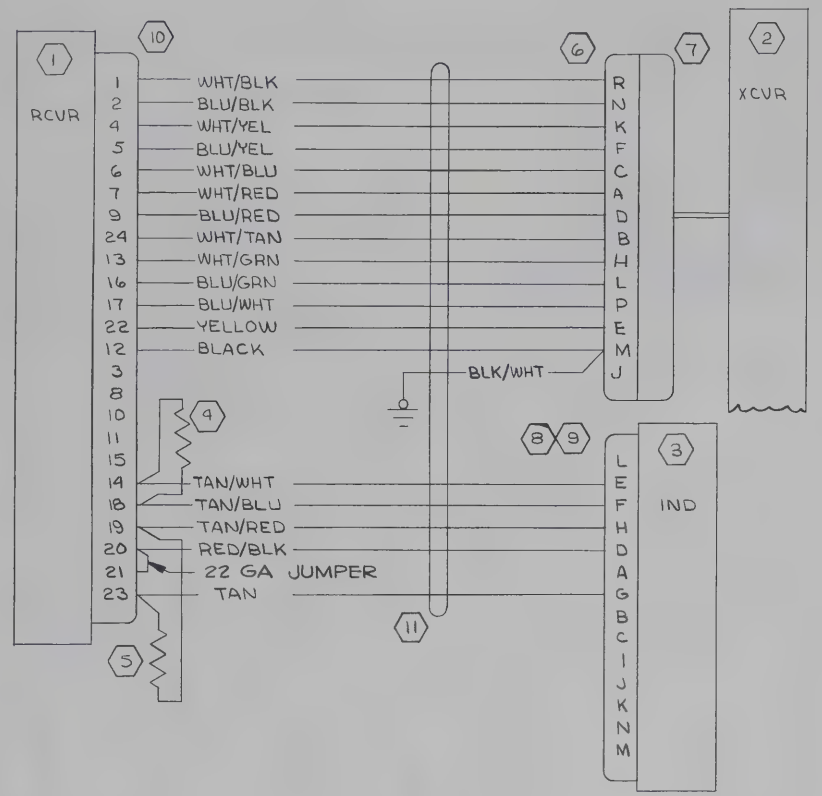

NOTES:

1. 41247-102 CONNECTOR & MRA-14S PIG TAIL ARE PART OF EL-2053 CONN KIT

2. 41223-3 PLUG & 41228-6 CLAMP ARE SUPPLIED WITH VOA-9 INDICATOR

WIRE CODE NO.	GA	MATERIAL	LG	TERMINALS		SERIALS
BLK/WHT	18	-18-0-9		SOLDER	S-1367-1-6	
RED/BLK	18	-18-2-0			SOLDER	
TAN/RED	22	-22-10-2				
TAN/BLU		-22-10-6				
TAN/WHT		-22-10-9				
BLU/WHT		-22-6-9				
BLU/GRN		-22-6-5				
BLU/RED		-22-6-2				
BLU/YEL		-22-6-4				
BLU/BLK		-22-6-9				
WHT/TAN		-22-9-10				
WHT/GRN		-22-9-5				
WHT/RED		-22-9-2				
WHT/BLU		-22-9-6				
WHT/YEL		-22-9-4				
WHT/BLK	22	-22-9-0				
BLK	18	-18-0				
YEL	18	-18-4				
TAN	22	-22-10		SOLDER	SOLDER	

WIRE TABLE

ITEM NO.	PART NO.	DESCRIPTION	PAGE
11	-228	CABLE ASSY	2.23.0
10	41291-101	CONNECTOR	2.2 .0
9	41228-6	CLAMP	<2
8	41223-2	PLUG	<2
1 7	MRA-14S	PIG TAIL	2.23.0
1 6	41247-102	CONNECTOR	2.23.0
5	1000Ω, 1/4 WATT	RESISTOR	2.23.0
4	470Ω, 1/4 WATT	RESISTOR	2.23.0
3	VOA-9	INDICATOR	3.12
2	MARK 12A	TRANSCEIVER	3.12
1	UGR-2	RECEIVER	4.8

EQUIPMENT TABLE

CES-1000 IS APPLICABLE
VENDOR CODES PER S-1400
CES-XXXX=CESSNA SPEC. NO.
S-XXX OR CMXXXX=CESSNA STD. NO.

SUPERSEDES:

SUPERSEDED BY:

CONTRACT NO:

	NAME	DATE
DESIGN	HENSHAW	10-14-68
GROUP	H. Wise	10-19-68
DRAWN	L. Scraper	10-4-68
CHECK	RCAxtell	10-9-68
STRESS	R.F. GEIDE	10-11-68
PROJECT		10-22-68
APPD	SWANEY	10-10-68

Cessna AIRCRAFT CO.
COMMERCIAL AIRCRAFT DIV.
5800 E. PAWNEE
WICHITA, KANSAS

TITLE
WIRING DIAGRAM —
NARCO UGR-2 GLIDESLOPE
WITH NARCO MARK 12A & VOA-9

SIZE	CODE IDENT. NO.	DWG NO.
C	71379	1270801

SCALE: NONE | 207 | PAGE: 2.23.1

FORM NO. 80-218A

ED&RR 10028 (SR 5707) IX

REVISION			
LET	DESCRIPTION	DATE	APPD

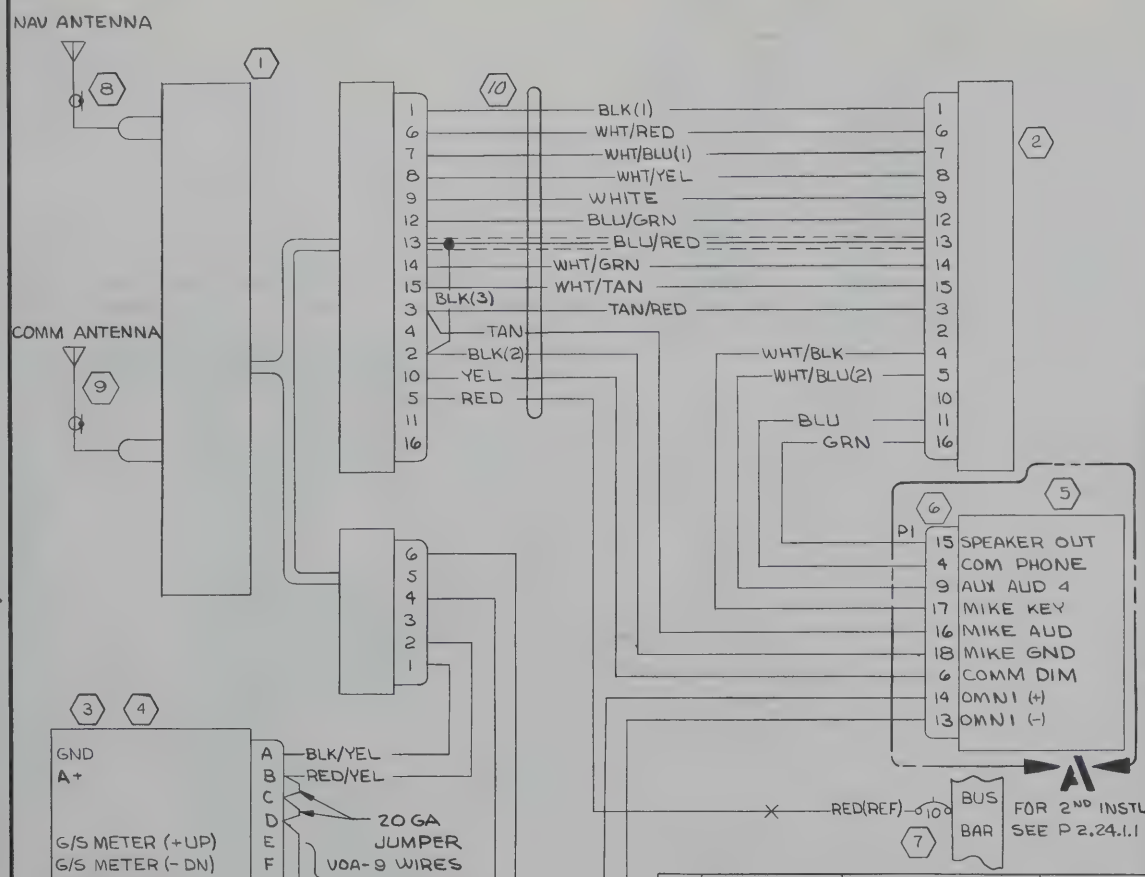

WIRE CODE NO.	GA	MATERIAL	LG	TERMINALS			SERIALS
BLK(3)	22	-22-0		SOLDER	SOLDER		
GRY/BLU	22	-22-8-6		SOLDER			
GRY/YEL		-22-8-4		SOLDER			
GRY/GRN		-22-8-5		S-1837-1			
GRY/RED		-22-8-2		S-1837-1			
RED/YEL		-22-2-4		SOLDER			
BLK/YEL	22	-22-0-4		SOLDER			
BLU/RED	22S	-22-6-2		SOLDER			
BLU/GRN	22	-22-6-5		SOLDER			
WHT/TAN		-22-9-10		SOLDER			
WHT/GRN		-22-9-5		SOLDER			
WHT/YEL		-22-9-4		SOLDER			
WHT/BLU(2)		-22-9-6		S-1837-1			
WHT/BLU(1)		-22-9-6		SOLDER			
WHT/RED		-22-9-2		SOLDER			
WHT/BLK		-22-9-0		S-1837-1			
TAN/RED		-22-10-2		SOLDER			
BLK(2)	22	-22-0		S-1837-1			
BLK(1)	16	-16-0		SOLDER			
TAN	22	-22-10		S-1837-1			
BLU	22	-22-6		S-1837-1			
YEL	18	-18-4		S-1837-1			
RED	16	-16-2		S-1370-2			
GREEN	20	-20-5		S-1837-1			
WHITE	14	-14-9		SOLDER	SOLDER		

WIRE TABLE

ITEM NO.	PART NO.	DESCRIPTION	PAGE
10	-230	CABLE ASSY	2.23.0
9	C598501-0101	COMM ANTENNA	6.1
8	1270012-1	NAV ANTENNA	6.2
7	S-1360-10	CKT BKR	3.12
6	S-1838-2	CONNECTOR	2.24.0
5	0570084-1	JUNCTION BOX ASSY	7.11
4	VOA-9	CONVERTER-IND	3.12
3	VOA-8	CONVERTER-IND	3.12
2	T12MP-12	PWR-AUD UNIT	4.7
1	MARK 12A	TRANSCEIVER	3.12

EQUIPMENT TABLE

NOTES:

1. THIS JUMPER USED ONLY WHEN DUAL INSTALLATION ARE REQD WITH CESSNA NAV-O-MATIC SYSTEMS

CES-1000 IS APPLICABLE VENDOR CODES PER S-1400
CES-XXXX=CESSNA SPEC. NO.
S-XXX OR CMXXXX=CESSNA STD. NO.

SUPERSEDES:

SUPERSEDED BY:

CONTRACT NO:

	NAME	DATE
DESIGN	HENSHAW	10-14-68
GROUP	H. Wise	10-19-68
DRAWN	L. SCRAPER	10-4-68
CHECK	RCA TEL	10-9-68
STRESS	R.F. GEIDE	10-11-68
PROJECT		10-22-68
APPD	SWANEY	10-10-68

Cessna AIRCRAFT CO.
COMMERCIAL AIRCRAFT DIV.
5800 E. PAWNEE
WICHITA, KANSAS

TITLE
WIRING DIAGRAM — NARCO MARK 12A WITH VOA-8 & VOA-9

SIZE	CODE IDENT. NO.	DWG NO.
C	71379	1270801

SCALE: NONE | 207 | PAGE: 2.24.1.0

FORM NO. 80-218A

ED4RR 1002B (6R5707)II

REVISION			
LET	DESCRIPTION	DATE	APPD

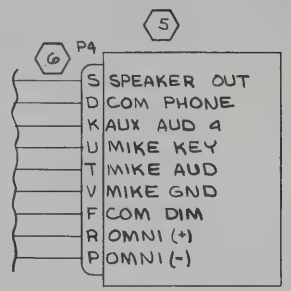

DETAIL A
2ND INSTL

WIRE CODE NO.	GA	MATERIAL	LG	TERMINALS		SERIALS

WIRE TABLE

ITEM NO.	PART NO.	DESCRIPTION

EQUIPMENT TABLE

CES-1000 IS APPLICABLE
VENDOR CODES PER S-1400
CES-XXXX=CESSNA SPEC. NO.
S-XXX OR CMXXXX=CESSNA
STD. NO.

SUPERSEDES:

SUPERSEDED BY:

CONTRACT NO:

	NAME	DATE
DESIGN	HENSHAW	10-19-68
GROUP	H. Wiel	10-19-68
DRAWN	L. SCRAPER	10-7-68
CHECK	RCA xTELL	10-9-68
STRESS	R.F.GEIDE	10-11-68
PROJECT		10-20-68
APPD	SWANEY	10-10-68

Cessna AIRCRAFT CO.
COMMERCIAL AIRCRAFT DIV.
5800 E. PAWNEE
WICHITA, KANSAS

TITLE
WIRING DIAGRAM —
NARCO MARK 12A WITH
VOA-8 & VOA-9

SIZE	CODE IDENT. NO.	DWG NO.
C	71379	1270801

SCALE: NONE | 207 | PAGE: 2.24.1.1

FORM NO. 80-2TBA

ED#RR 10028 (SR5707) II

NOTES:

1. THESE CIRCUITS PROVIDE A 4Ω, 5 WATT SPEAKER LOAD WHEN REQD BY THE RADIO INSTL

2. CONNECTOR IS FURNISHED WITH KA-25C

REVISION			
LET	DESCRIPTION	DATE	APPD

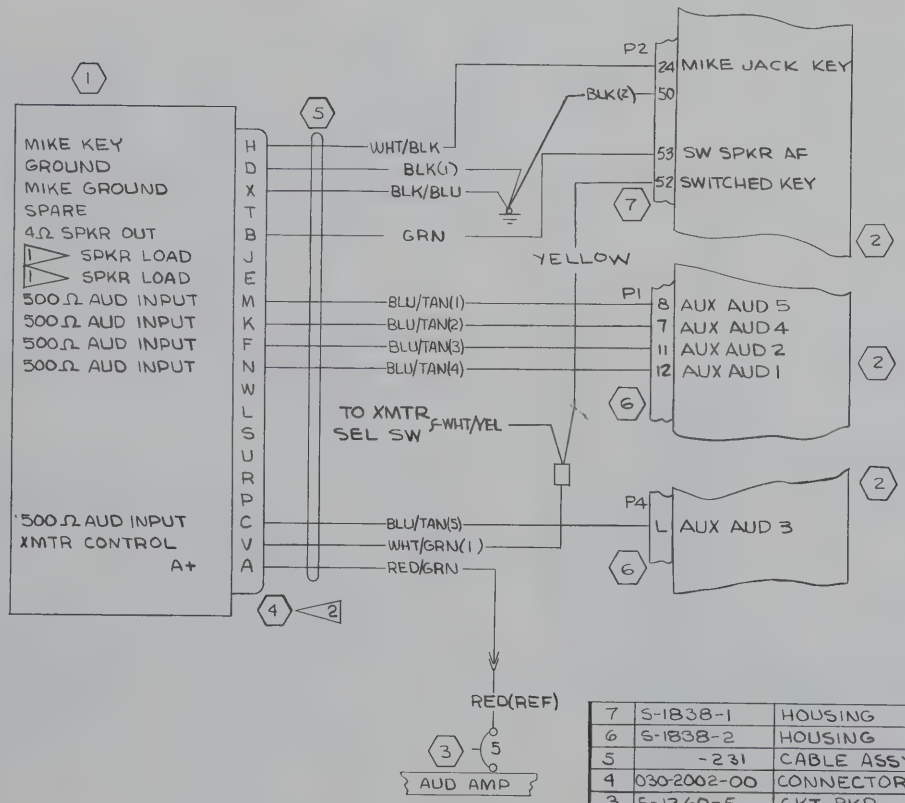

WIRE CODE NO.	GA	MATERIAL	LG	TERMINALS		SERIALS
RED/GRN	20	-20-2-5		S-341-2	SOLDER	
WHT/GRN(2)	22	-22-9-5		S-1837-1	SEE WHT/YEL	
BLU/TAN(5)	22	-22-6-10		S-1837-1	SOLDER	
BLU/TAN(4)	22	-22-6-10				
BLU/TAN(3)	22	-22-6-10				
BLU/TAN(2)	22	-22-6-10				
BLU/TAN(1)	22	-22-6-10		S-1837-1	SOLDER	
YEL.	22	-22-9-4		S-1370-1	SOLDER	
WHT/GRN(1)	22	-22-9-5		SOLDER	SEE WHT/YEL	
BLK/BLU	22	-22-0-6		S-1367-1-6	SOLDER	
WHT/BLK	22	-22-9-0		S-1837-1	SOLDER	
GRN	20	-20-5		S-1837-1	SOLDER	
BLK(2)	18	-18-0		S-1367-1-6	SOLDER	
BLK(1)	18	-18-0		S-1367-1-6	SOLDER	

WIRE TABLE

ITEM NO.	PART NO.	DESCRIPTION	PAGE
7	S-1838-1	HOUSING	2.25.0
6	S-1838-2	HOUSING	2.25.0
5	-231	CABLE ASSY	2.25.0
4	030-2002-00	CONNECTOR	2.25.0
3	S-1360-5	CKT BKR	
2	0570084-1	JCT BOX ASSY	7.11
1	KA-25C	AUDIO AMPLIFIER	7.10

EQUIPMENT TABLE

CES-1000 IS APPLICABLE VENDOR CODES PER S-1400
CES-XXXX=CESSNA SPEC. NO.
S-XXX OR CMXXXX=CESSNA STD. NO.

SUPERSEDES:

SUPERSEDED BY:

CONTRACT NO:

	NAME	DATE
DESIGN	HENSHAW	10-11-68
GROUP	H. Wise	10-19-68
DRAWN	L. SCRAPER	10-7-68
CHECK	RCA XTELL	10-9-68
STRESS	R.F. GEIDE	10-11-68
PROJECT	J. Parker	10-29-68
APPD	SWANEY	10-10-68

Cessna AIRCRAFT CO.
COMMERCIAL AIRCRAFT DIV.
5800 E. PAWNEE
WICHITA, KANSAS

TITLE
WIRING DIAGRAM — ISOLATION AMPLIFIER, KING KA-25C

SIZE	CODE IDENT. NO.	DWG NO.
C	71379	1270801

SCALE: NONE | 207 | PAGE: 2.25.1

FORM NO. 80-215A

ED#RR 10028 (SR5707) IX

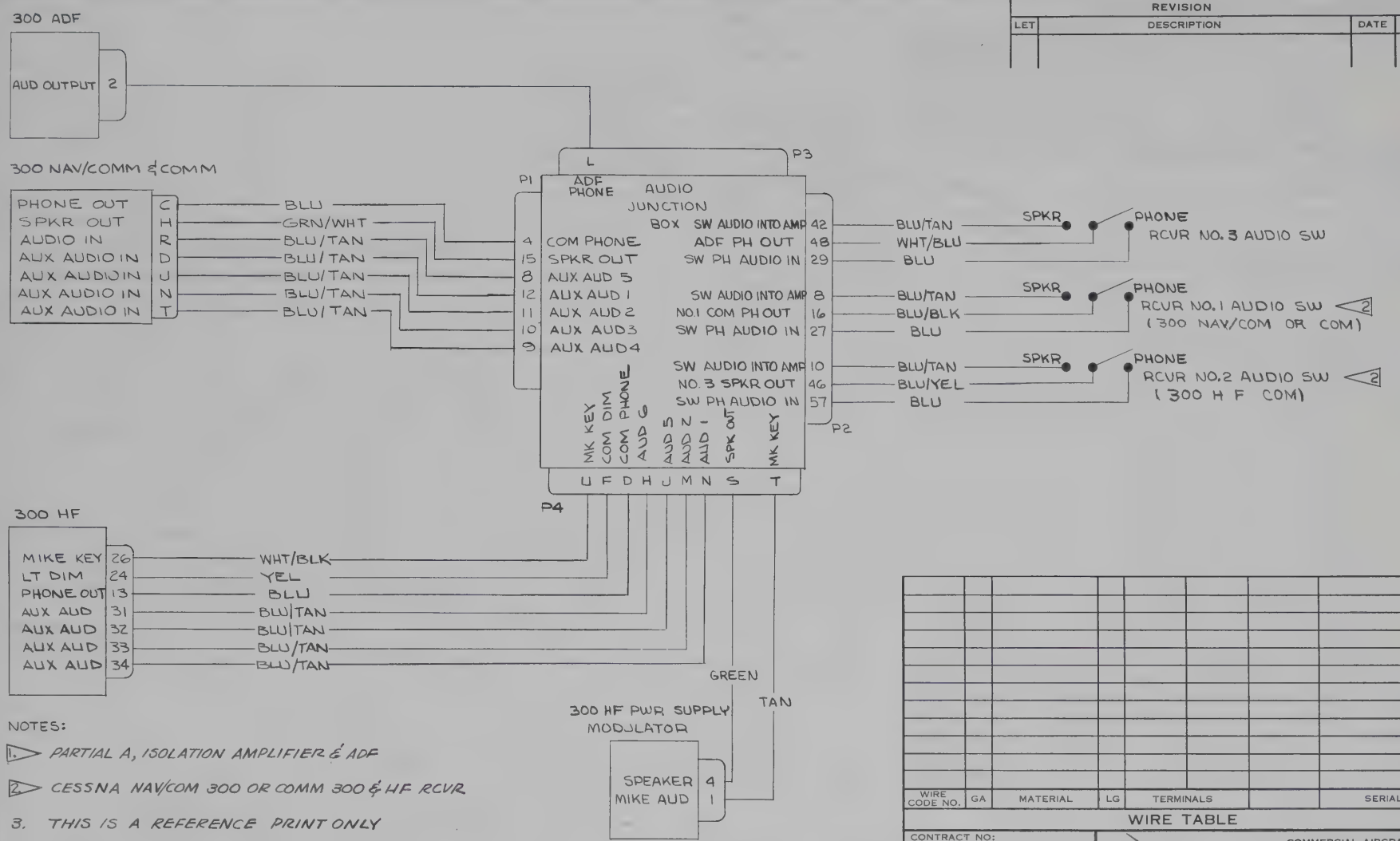

NOTES:

1. PARTIAL A, ISOLATION AMPLIFIER & ADF
2. CESSNA NAV/COM 300 OR COMM 300 & HF RCVR
3. THIS IS A REFERENCE PRINT ONLY
4. REFER TO 1270801 PAGE 2.5.2 FOR TRANSMITTER SELECTOR SWITCH WIRING

REVISION			
LET	DESCRIPTION	DATE	APPD

WIRE CODE NO.	GA	MATERIAL	LG	TERMINALS		SERIALS

WIRE TABLE

ITEM NO.	PART NO.	DESCRIPTION
	EQUIPMENT TABLE	

CES-1000 IS APPLICABLE VENDOR CODES PER S-1400
CES-XXXX=CESSNA SPEC. NO.
S-XXX OR CMXXXX=CESSNA STD. NO.

SUPERSEDES:

SUPERSEDED BY:

CONTRACT NO:

	NAME	DATE
DESIGN	HENSHAW	10-19-68
GROUP	H. Wiles	11-8-68
DRAWN	L. SCRAPER	10-7-68
CHECK	RCAXTELL	10-9-68
STRESS	R.F. GEIDE	10-11-68
PROJECT	P.G. Parker	11-14-68
APPD	SWANEY	10-10-68

Cessna AIRCRAFT CO.
COMMERCIAL AIRCRAFT DIV.
5800 E. PAWNEE
WICHITA, KANSAS

TITLE
WIRING DIAGRAM — TYPICAL SWITCHING ADF, 300HF & 300 COMM

SIZE	CODE IDENT. NO.	DWG NO.
C	71379	1270801

SCALE: NONE | 207 | PAGE: 2.26

FORM NO. 80-215A

ED#RR10028 (SR5707) II

REVISION			
LET	DESCRIPTION	DATE	APPD

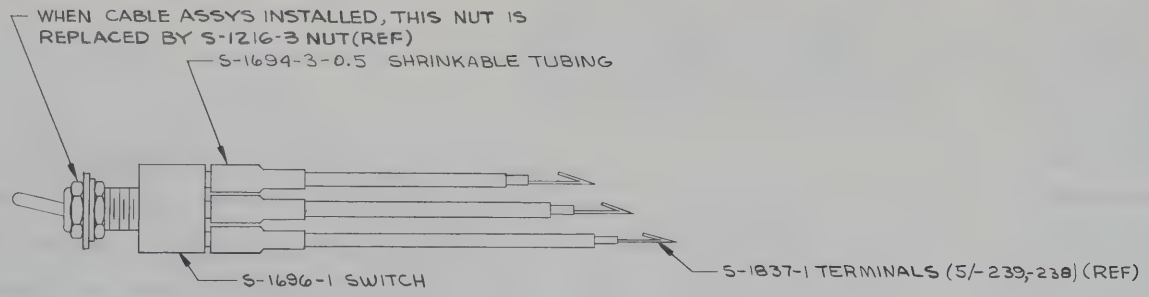

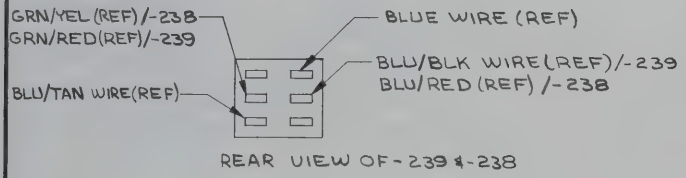

REAR VIEW OF -239 & -238

(239) CABLE ASSY - AUDIO SELECTOR SWITCH, COMM 1
(238) CABLE ASSY - AUDIO SELECTOR SWITCH, COMM 2

NO. REQD/NEXT ASSY	EFFECTIVE SERIALS	PAGE	PART NUMBER	DESCRIPTION
AR AR		2.27.1		WIRING
5 5			S-1694-3-0.5	SHRINKABLE TUBING
1 1			S-1696-1	SWITCH
			-238	CABLE ASSY-AUD SEL, COMM 2
			-239	CABLE ASSY-AUD SEL, COMM 1
238 239				

LIST OF MATERIAL

DO NOT SCALE PRINT
BREAK ALL SHARP EDGES
A/R = AS REQD
CES-XXXX=CESSNA SPEC. NO.
S-XXX OR CMXXXX=CESSNA STD. NO.
S=APPROX EQUAL SPACES
CES-1000 IS APPLICABLE
VENDOR CODES PER S-1400

UNLESS OTHERWISE SPECIFIED
DIMENSIONS ARE IN INCHES
TOLERANCES ARE
DECIMALS: .00 ±.03, .000 ±.010 | ANGLES: MACH ±.30, FORMED ±2°
FOR HOLES, CSINKS, ETC., SEE CES 1012
FOR BASIC CODES SEE NAS 523
BJ=MS20470AD | BB=MS20426AD

SUPERSEDES:

SUPERSEDED BY:

CONTRACT NO:

	NAME	DATE
DESIGN	HENSHAW	10-19-68
GROUP	N. Wise	10-19-68
DRAWN	L. SCRAPER	10-7-68
CHECK	RCAYTELL	10-9-68
STRESS	R.F.GEIDE	10-11-68
PROJECT	[illegible]	10-22-68
APPD	SWANEY	10-10-68

Cessna AIRCRAFT CO.
COMMERCIAL AIRCRAFT DIV.
5800 E. PAWNEE
WICHITA, KANSAS

TITLE: CABLE ASSEMBLY - AUDIO SEL SW, NARCO MARK 12A

SIZE: C | CODE IDENT. NO.: 71379 | 1270801

SCALE: NONE | 207 | PAGE: 2.27.0

FORM NO. 80-221

ED&RR 10028 (SR5707) IX

REVISION			
LET	DESCRIPTION	DATE	APPD

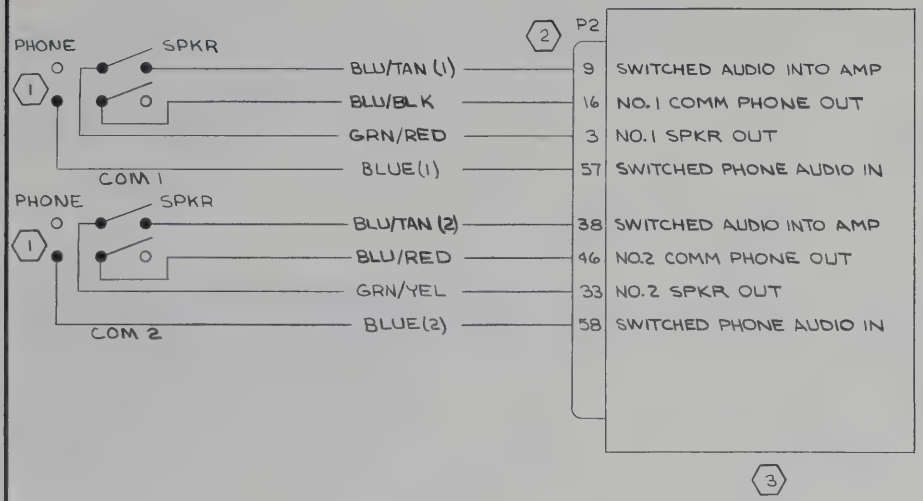

WIRE CODE NO.	GA	MATERIAL	LG	TERMINALS		SERIALS
GRN/YEL	22	-22-5-4		S-1837-1	SOLDER	
BLU/BLK(1)	22	-22-6-0				
BLU/RED	22	-22-6-2				
GRN/RED	22	-22-5-2				
BLU (2)	22	-22-6				
BLU (1)	22	-22-6				
BLU/TAN(2)	22	-22-6-10				
BLU/TAN (1)	22	-22-6-10		S-1837-1	SOLDER	

WIRE TABLE

ITEM NO.	PART NO.	DESCRIPTION	PAGE
3	0570084-1	JCT BOX ASSY	7.11
2	S-1838-1	HOUSING	2.25.0
1	S-1696-1	SWITCH	2.27.0

EQUIPMENT TABLE

CES-1000 IS APPLICABLE
VENDOR CODES PER S-1400
CES-XXXX=CESSNA SPEC. NO.
S-XXX OR CMXXXX=CESSNA
STD. NO.

SUPERSEDES:

SUPERSEDED BY:

CONTRACT NO:

	NAME	DATE
DESIGN	HENSHAW	10-14-68
GROUP	H. Wise	10-19-68
DRAWN	L. SCRAPER	10-7-68
CHECK	RCA XTELL	10-9-68
STRESS	R.F. GEIDE	10-11-68
PROJECT		10-22-68
APPD	SWANEY	10-10-68

Cessna AIRCRAFT CO.
COMMERCIAL AIRCRAFT DIV.
5800 E. PAWNEE
WICHITA, KANSAS

TITLE
WIRING DIAGRAM —
AUDIO SELECTOR SWITCH,
NARCO MK12A

SIZE	CODE IDENT. NO.	DWG NO.
C	71379	1270801

SCALE: NONE | 207 | PAGE: 2.27.1

FORM NO. 80-215A

ED & RR 10028 (SR5707) IX

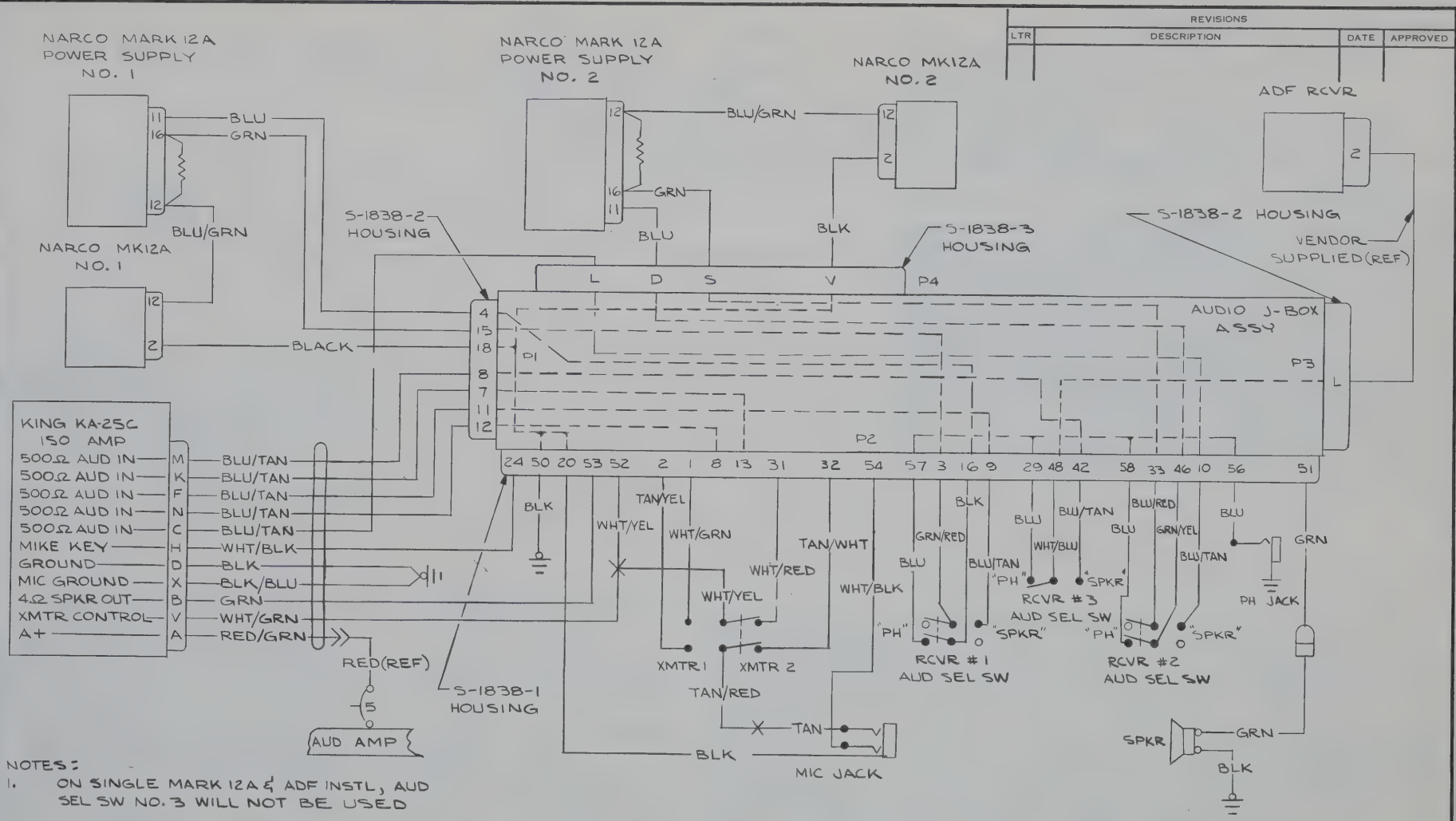

REVISIONS			
LTR	DESCRIPTION	DATE	APPROVED

NOTES:

1. ON SINGLE MARK 12A & ADF INSTL, AUD SEL SW NO. 3 WILL NOT BE USED
2. THIS PAGE IS A REFERENCE PRINT ONLY
3. REFER TO 1270801 PAGE 2.25.1 FOR KING KA-25C ISOLATION AMPLIFIER WIRING DIAGRAM

CONTRACT NO:	NAME	DATE
DESIGN	HENSHAW	11-20-68
GROUP	A. Mixed	11-26-68
DRAWN	HENSHAW	11-20-68
CHECK	RCANTRELL	10-9-68
STRESS	R.F GEIDE	10-11-68
PROJECT		12-2-68
APPD	SWANEY	10-10-68

Cessna AIRCRAFT CO.
COMMERCIAL AIRCRAFT DIV.
5800 E. PAWNEE
WICHITA, KANSAS

TITLE: WIRING DIAGRAM — TYPICAL SWITCHING, NARCO MARK 12A & ADF

SIZE	CODE IDENT. NO.	DWG NO.
C	71379	1270801

SCALE: NONE | 207 | PAGE: 2.27.2

FORM NO. 80-216

SR 5707 IX

REVISION			
LET	DESCRIPTION	DATE	APPD

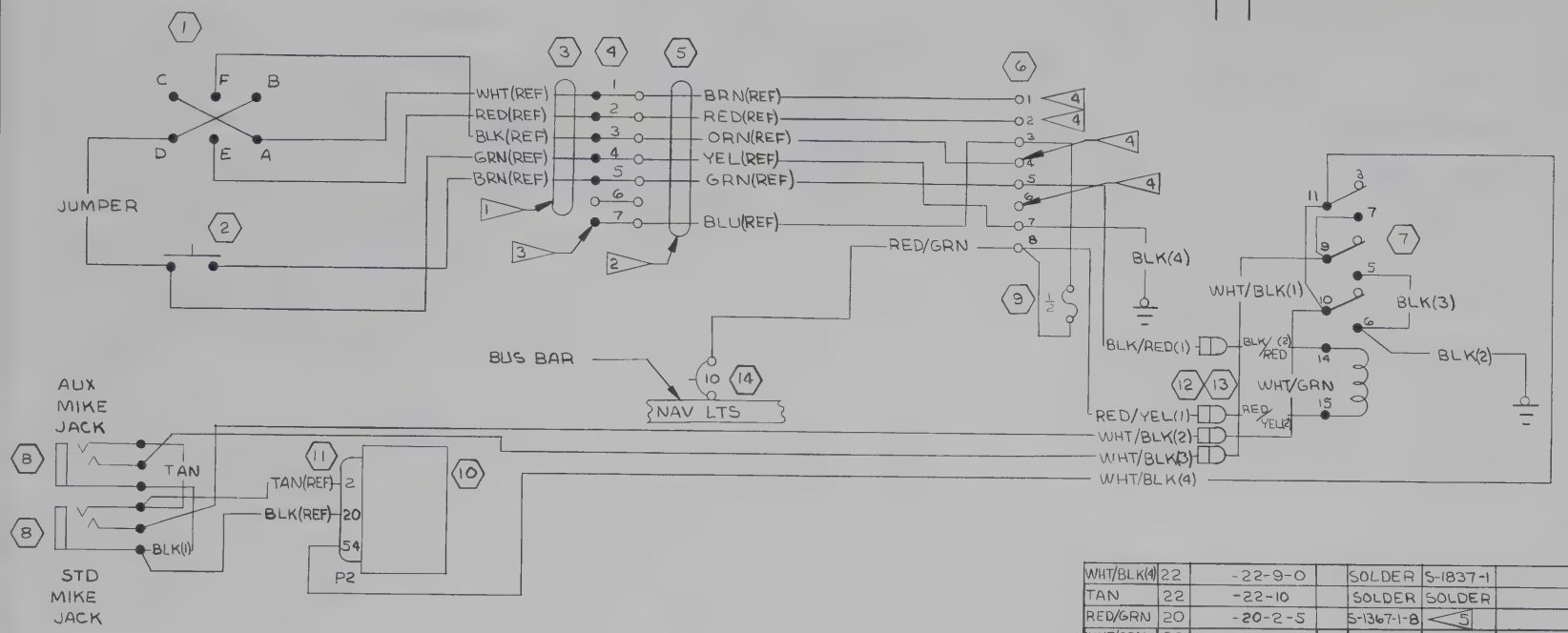

NOTES:

1. BOTH ENDS OF 8995 CABLE TO BE SOLDERED
2. BOTH ENDS OF SF-1030-BX CABLE TO BE TERMINATED WITH 320733 TERMINALS(00779)
3. POWER SOURCE FOR MAP LIGHT REFER TO 1270800 PAGE 11.6.0 FOR SCHEMATIC OF ETCHED CKT BOARD
4. REFER TO 1270800 PAGE 14.2.0 FOR PITCH TRIM MOTOR WIRING DIAGRAM
5. PART NO. IS 329636, VENDOR CODE IS 00779

ITEM NO.	PART NO.	DESCRIPTION	PAGE
14	S-1360-10	CKT BKR	1270800;11.3
13	S-1637-1	HOUSING-CAP	
12	S-1637-2	HOUSING-PLUG	
11	S-1838-1	HOUSING	
10	0570084-1	JUNCTION BOX ASSY	7.11
9	1570141-1	FUSE ASSY	
8	S-1102-1	JACK	7.2
7	S-1813-2	RELAY	7.3
6	B-171	TERM BLOCK	7.3
5	SF-1030-BX	CABLE	7.3
4	1570142-2	CIRCUIT BOARD ASSY	
3	8445	CABLE	1560010
2	39-1	SWITCH	1560325
1	305-4304	SWITCH	1560010

EQUIPMENT TABLE

CES-1000 IS APPLICABLE VENDOR CODES PER S-1400
CES-XXXX=CESSNA SPEC. NO.
S-XXX OR CMXXXX=CESSNA STD. NO.

SUPERSEDES:

SUPERSEDED BY:

W.RE CODE NO.	GA	MATERIAL	LG	TERMINALS		SERIALS
WHT/BLK(4)	22	-22-9-0		SOLDER	S-1837-1	
TAN	22	-22-10		SOLDER	SOLDER	
RED/GRN	20	-20-2-5		S-1367-1-8	<5>	
WHT/GRN	22	-22-9-5		SOLDER	S-1635-1	
BLK/RED(2)	22	-22-0-2		SOLDER	S-1635-1	
BLK/RED(1)	22	-22-0-2		<5>	S-1636-1	
RED/YEL(2)	22	-22-2-4		SOLDER	S-1635-1	
RED/YEL(1)	22	-22-2-4		<5>	S-1636-1	
WHT/BLK(3)	22	-22-9-0		S-1636-1	SOLDER	
WHT/BLK(2)	22	-22-9-0		S-1636-1	SOLDER	
WHT/BLK(1)	22	-22-9-0		SOLDER	S-1635-1	
BLK(4)	22	-22-0		<5>	S-1367-1-8	
BLK(3)	22	-22-0		SOLDER	SOLDER	
BLK(2)	22	-22-0		SOLDER	S-1367-1-8	
BLK(1)	22	-22-0		SOLDER	SOLDER	

WIRE TABLE

CONTRACT NO:

	NAME	DATE
DESIGN	HENSHAW	10-14-68
GROUP	N. Wise	10-19-68
DRAWN	L. SCRAPER	10-2-68
CHECK	RCAYTELL	10-9-68
STRESS	R.E.GEIDE	10-11-68
PROJECT	[illegible]	11-11-68
APPD	SWANEY	10-10-68

Cessna AIRCRAFT CO.
COMMERCIAL AIRCRAFT DIV.
5800 E. PAWNEE
WICHITA, KANSAS

TITLE
WIRING DIAGRAM — PITCH TRIM, MIKE & MAP LIGHT, CONTROL WHEEL

SIZE	CODE IDENT. NO.	DWG NO.
C	71379	1270801

SCALE: NONE | 207 | PAGE: 2.29

FORM NO. 80-218A

REVISION			
LET	DESCRIPTION	DATE	APPD

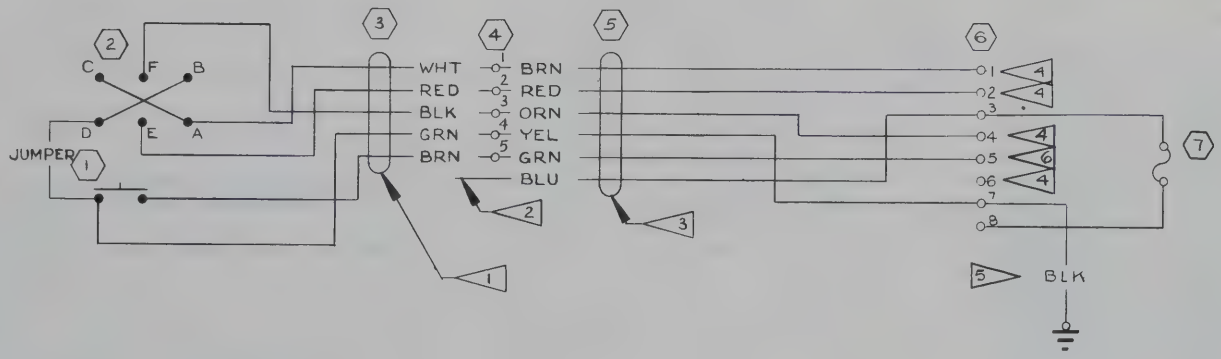

NOTES:

1. SWITCH END OF 8445 CABLE TO BE SOLDERED. TERM BLOCK END TO BE TERMINATED WITH 320733 TERMINALS (00779)
2. USED ONLY WITH MAP LITE
3. BOTH ENDS OF SF-1030-BX CABLE TO BE TERMINATED WITH 320733 TERMINALS (00779)
4. REFER TO 1270800 PAGE 14.2.0 FOR PITCH TRIM MOTOR WIRING DIAGRAM.
5. ALL WIRE SHOWN ON THIS PAGE ARE ALSO SHOWN ON PAGE 2.23 REFER TO 2.23 FOR WIRE TERMATION DETAILS.
6. A MIKE KEYING RELAY IS REQUIRED WITH 39-1 SWITCH. REFER TO PAGE 2.23 FOR RELAY & ADDITIONAL CIRCUIT.
7. THIS PRINT USED FOR REFERANCE ONLY

ITEM NO.	PART NO.	DESCRIPTION	PAGE
	EQUIPMENT TABLE		
7	1570141-1	FUSE ASSY	
6	8-171	TERM BLOCK	7.3
5	SF-1030-BX	CABLE	1560010
4	5-171	TERM BLOCK	1560010
3	8445	CABLE	1560010
2	305-4304	SWITCH	1560010
1	39-1	SWITCH	1560325

CES-1000 IS APPLICABLE VENDOR CODES PER S-1400
CES-XXXX=CESSNA SPEC. NO.
S-XXX OR CMXXXX=CESSNA STD. NO.

SUPERSEDES:

SUPERSEDED BY:

WIRE CODE NO.	GA	MATERIAL	LG	TERMINALS		SERIALS

WIRE TABLE

CONTRACT NO:

	NAME	DATE
DESIGN	HENSHAW	10-19-68
GROUP	H. Wise	10-19-68
DRAWN	L. SCRAPER	10-7-68
CHECK	RCAXTELL	10-9-68
STRESS	R.E. GEIDE	10-11-68
PROJECT		10-12-68
APPD	SWANEY	10-10-68

Cessna AIRCRAFT CO.
COMMERCIAL AIRCRAFT DIV.
5800 E. PAWNEE
WICHITA, KANSAS

TITLE
WIRING DIAGRAM —
PITCH TRIM & MIKE SWITCH, CONTROL WHEEL

SIZE	CODE IDENT. NO.	DWG NO.
C	71379	1270801

SCALE: NONE | 207 | PAGE: 2.30

FORM NO. 80-215A

ED & RR 10028 (SR5707) IX

REVISION			
LET	DESCRIPTION	DATE	APPD

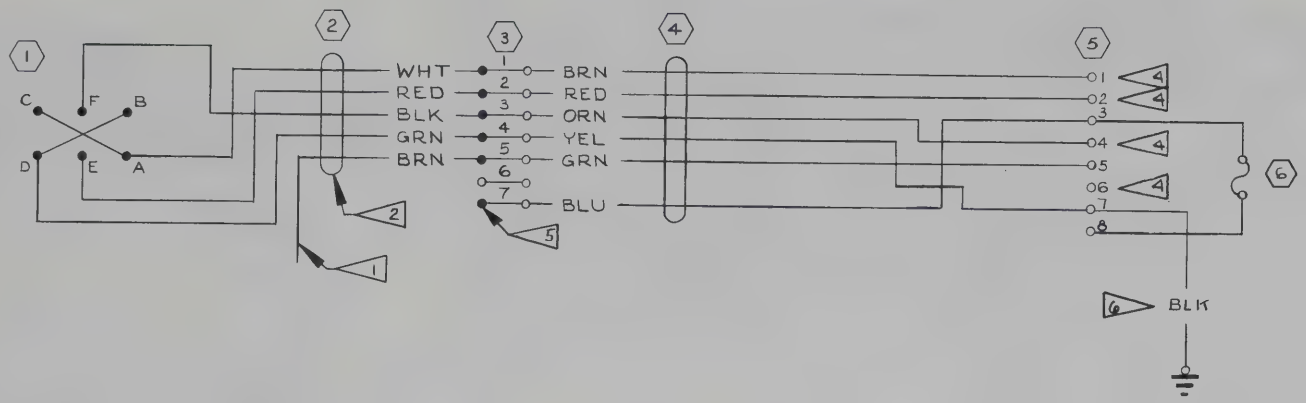

NOTES:

1. USED ONLY WITH MIKE SWITCH
2. BOTH ENDS OF 8445 CABLE TO BE SOLDERED
3. BOTH ENDS OF SF1030-BX CABLE TO BE TERMINATED WITH 320733 TERMINALS (00779)
4. REFER TO 1270800 PAGE 14.2.0 FOR PITCH TRIM MOTOR WIRING DIAGRAM
5. POWER SOURCE FOR MAP LIGHT REFER TO 1270800 PAGE 11.6.0
6. ALL WIRES SHOWN ON THIS PAGE ARE ALSO SHOWN ON 1270801 PAGE 2.23 REFER TO 2.23 FOR WIRE TERMINATION DETAILS.
7. THIS PRINT USED FOR REF ONLY

ITEM NO.	PART NO.	DESCRIPTION	PAGE
6	1570141-1	FUSE ASSY	
5	8-171	TERM BLOCK	7.3
4	SF-1030-BX	CABLE	1560010
3	1570142-2	CIRCUIT BOARD ASSY	
2	8445	CABLE	1560010
1	305-4304	SWITCH	1560010

EQUIPMENT TABLE

CES-1000 IS APPLICABLE VENDOR CODES PER S-1400
CES-XXXX=CESSNA SPEC. NO.
S-XXX OR CMXXXX=CESSNA STD. NO.

SUPERSEDES:

SUPERSEDED BY:

WIRE CODE NO.	GA	MATERIAL	LG	TERMINALS			SERIALS

WIRE TABLE

CONTRACT NO:

	NAME	DATE
DESIGN	HENSHAW	10-14-68
GROUP	H. Wish	10-19-68
DRAWN	L. SCRAPER	10-7-68
CHECK	RCAXTELL	10-9-68
STRESS	R.F.GEIDE	10-11-68
PROJECT	[illegible]	10-22-68
APPD	SWANEY	10-10-68

Cessna AIRCRAFT CO.
COMMERCIAL AIRCRAFT DIV.
5800 E. PAWNEE
WICHITA, KANSAS

TITLE
WIRING DIAGRAM — PITCH TRIM & MAP LIGHT, CONTROL WHEEL

SIZE	CODE IDENT. NO.	DWG NO.
C	71379	1270801

SCALE: NONE | 207 | PAGE: 2.31

FORM NO. 80-215A

ED&RR 10028 (SR5707) IX

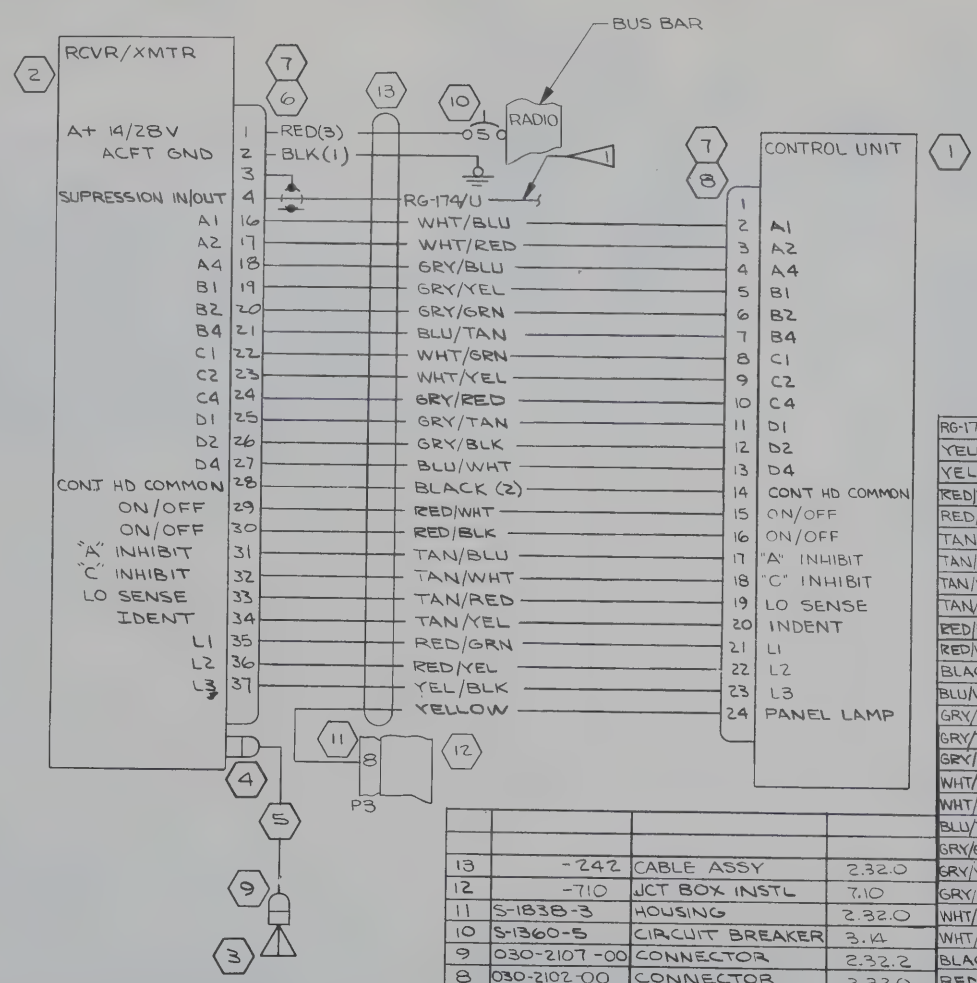

NOTES:

1. SUPRESSOR CABLE ROUTES WITH CABLE TO CONTROL PANEL. CENTER CONDUCTOR CONNECTS TO PIN 4 OF 300 DME CABLE & SHIELD CONNECTS TO PIN 8. CENTER CONDUCTOR TERMINATED WITH END CAP WHEN NOT USED

REVISION			
LET	DESCRIPTION	DATE	APPD
A	BY REV: GRY/RED WAS GRY/GRN(2), RED/WHT WAS RED(1), RED/BLK WAS RED(2), RED/YEL WAS YEL/WHT, YELLOW WAS GRY/YEL(2), GRY/YEL WAS GRY/YEL(1), GRY/GRN WAS GRY/GRN(1), RED WAS RED(3) ED&RR 10335 (SR5905)	RLY 1-23-69	JWH MOS KPC 2/1/69

RG-174/U		CABLE		SOLDER	1		
YELLOW	20	-20-4		SOLDER	S-1837-1		
YEL/BLK	22	-22-4-0			SOLDER		
RED/YEL	22	-22-2-4					
RED/GRN	22	-22-2-5					
TAN/YEL	22	-22-10-4					
TAN/RED	22	-22-10-2					
TAN/WHT	22	-22-10-9					
TAN/BLU	22	-22-10-6					
RED/BLK	18	-18-2-0					
RED/WHT	18	-18-2-9					
BLACK(2)	20	-20-0					
BLU/WHT	22	-22-6-9					
GRY/BLK	22	-22-8-0					
GRY/TAN	22	-22-8-10					
GRY/RED	22	-22-8-2					
WHT/YEL	22	-22-9-4					
WHT/GRN	22	-22-9-5					
BLU/TAN	22	-22-6-10					
GRY/GRN	22	-22-8-5					
GRY/YEL	22	-22-8-4					
GRY/BLU	22	-22-8-6					
WHT/RED	22	-22-9-2					
WHT/BLU	22	-22-9-6			SOLDER		
BLACK(1)	18	-18-0			S-1367-2-8		
RED	18	-18-2		SOLDER	S-1367-2-8		
WIRE CODE NO.	GA	MATERIAL	LG	TERMINALS			SERIALS

WIRE TABLE

13	-242	CABLE ASSY	2.32.0
12	-710	JCT BOX INSTL	7.10
11	S-1838-3	HOUSING	2.32.0
10	S-1360-5	CIRCUIT BREAKER	3.14
9	030-2107-00	CONNECTOR	2.32.2
8	030-2102-00	CONNECTOR	2.32.0
7	030-1019-00	CA CLAMP HALF	3.14 $4.12.0
6	030-2109-00	CONNECTOR	2.32.0
5	-241	CABLE ASSY	2.32.2
4	030-0060-00	CONNECTOR	2.32.2
3	C589505-0101	ANTENNA	6.11
2	C589504-0101	RCVR/XMTR UNIT 12V	4.12.0
1	C589503-0101	CONTROL PANEL 12V	3.14
ITEM NO.	PART NO.	DESCRIPTION	PAGE

EQUIPMENT TABLE

CES-1000 IS APPLICABLE VENDOR CODES PER S-1400
CES-XXXX=CESSNA SPEC. NO.
S-XXX OR CMXXXX=CESSNA STD. NO.

SUPERSEDES:

SUPERSEDED BY:

CONTRACT NO:

	NAME	DATE
DESIGN	HENSHAW	11-15-68
GROUP	H.W.	11-12-68
DRAWN	YOUNGERS	10-31-68
CHECK	HARRIS	11-5-68
STRESS	R.F. GEIDE	11-6-68
PROJECT		
APPD	SWANEY	11-7-68

Cessna AIRCRAFT CO.
COMMERCIAL AIRCRAFT DIV.
5800 E. PAWNEE
WICHITA, KANSAS

TITLE
WIRING DIAGRAM — CESSNA 300 TRANSPONDER

SIZE	CODE IDENT. NO.	DWG NO.
C	71379	1270801

SCALE: NONE | 207 | PAGE: 2.32.1

FORM NO 60 215A

ED&RR 10233 (SR5905)

REVISION			
LET	DESCRIPTION	DATE	APPD

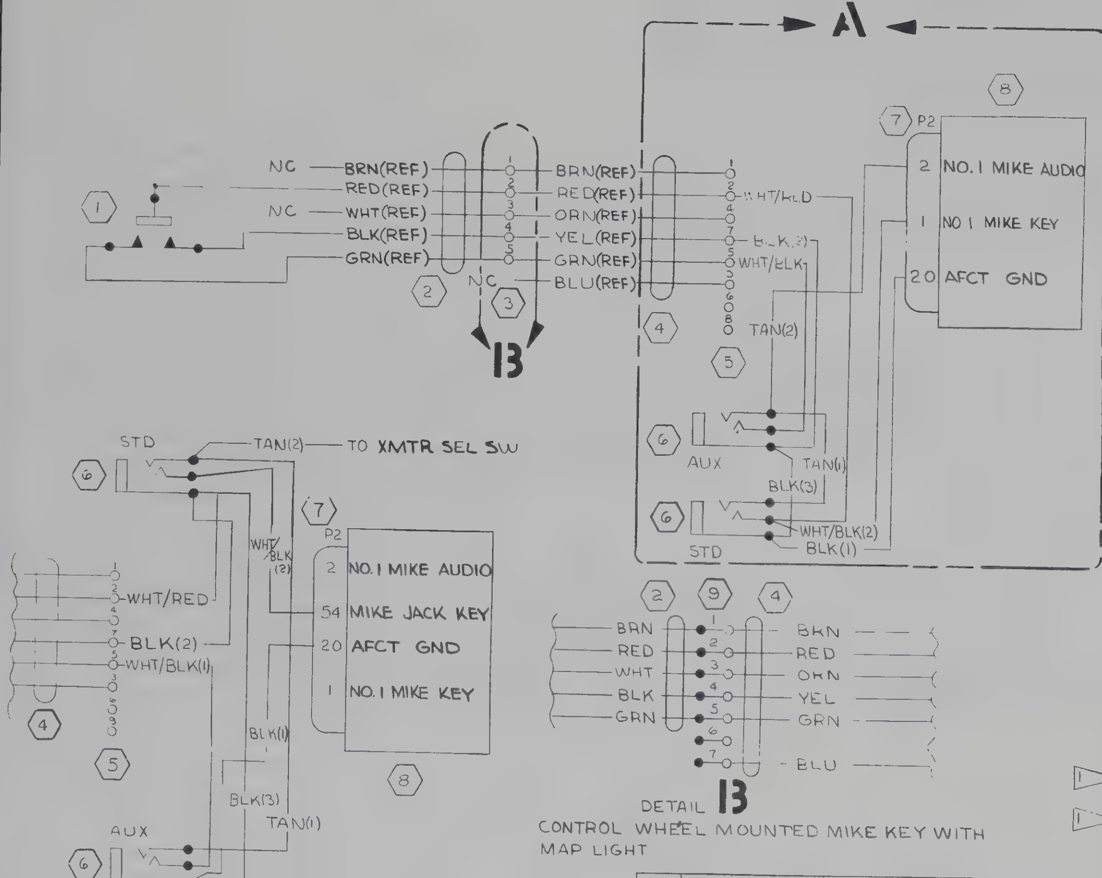

DETAIL B
CONTROL WHEEL MOUNTED MIKE KEY WITH MAP LIGHT

DETAIL A
2nd INSTALLATION

NOTES:

1. ON SECOND INSTALLATION WHT/BLK(3) & TAN(2) WIRES SOLDER TO XMTR SELECTOR SWITCH

2. 5-171 TERM BLOCK IS REPLACED BY 1570142-2 CIRCUIT BOARD ASSY WHEN A MAP LIGHT IS INSTALLED

EQUIPMENT TABLE

ITEM NO	PART NO.	DESCRIPTION	PAGE
9	1570142-2	CIRCUIT BOARD ASSY	
8	0570084-1	JUNCTION BOX ASSY	7.11
7	S-1838-1	CONNECTOR	
6	S 1102-1	JACK	7.2
5	8-171	TERM BLOCK	7.3
4	SF-1030-BX	CABLE	1560010
3	5-171	TERM BLOCK	1560010
2	8445	CABLE	1560010
1	A8002	SWITCH	

CES-1000 IS APPLICABLE
VENDOR CODES PER S-1400
CES-XXXX=CESSNA SPEC. NO.
S-XXX OR CMXXYX=CESSNA STD. NO.

SUPERSEDES:

SUPERSEDED BY:

WIRE TABLE

WIRE CODE NO	GA	MATERIAL	LG	TERMINALS		SERIALS
WHT/BLK(3) [1]	22	-22-9-0		SOLDER	SOLDER	
WHT/RED	22	-22-9-2		SOLDER	S-1367-1-8	
WHT/BLK(2)	22	-22-9-0		↑	S-1937-1	
WHT/BLK(1)	22	-22-9-0			S-367-1-8	
TAN(2) [1]	22	-22-10			S-1837-1	
TAN(1)	22	-22-10			SOLDER	
BLK(3)	22	-22-0			SOLDER	
BLK(2)	22	-22-0		↓	S-1367-1-8	
BLK(1)	22	-22-0		SOLDER	S-1837-1	

CONTRACT NO:

	NAME	DATE
DESIGN	HENSHAW	10-14-68
GROUP	H. Wise	10-18-68
DRAWN	SCRAPER	10-7-68
CHECK	RCAxtell	10-9-68
STRESS	[illegible]	[illegible]
PROJECT	[illegible]	[illegible]
APPD	SWANEY	10-10-68

Cessna AIRCRAFT CO.
COMMERCIAL AIRCRAFT DIV.
5800 E PAWNEE
WICHITA, KANSAS

TITLE
WIRING DIAGRAM — MIKE KEY, CONTROL WHEEL MOUNTED

SIZE	CODE IDENT. NO.	DWG NO.
C	71379	1270801

SCALE: NONE | 207 | PAGE: 2.33

ED&RR10028 (SR5707) IX

FORM NO 80 215A

REVISION			
LET	DESCRIPTION	DATE	APPD

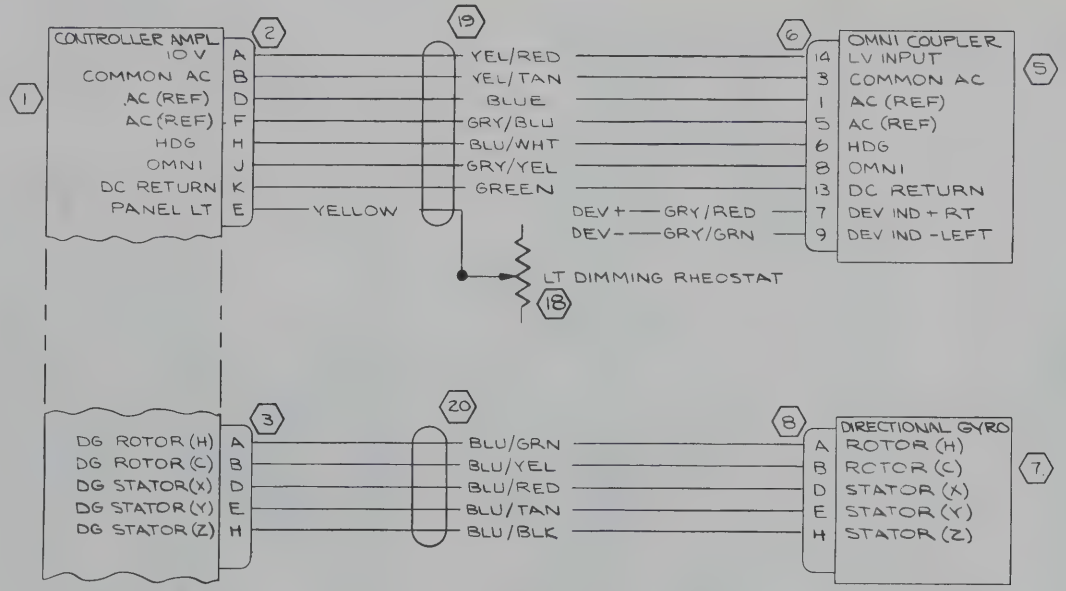

WIRE CODE NO.	GA	MATERIAL	LG	TERMINALS		SERIALS

WIRE TABLE

ITEM NO.	PART NO.	DESCRIPTION
		EQUIPMENT TABLE

CES-1000 IS APPLICABLE
VENDOR CODES PER S-1400
CES-XXXX=CESSNA SPEC. NO.
S-XXX OR CMXXXX=CESSNA STD. NO.

SUPERSEDES:

SUPERSEDED BY:

CONTRACT NO:

	NAME	DATE
DESIGN	HENSHAW	10-22-68
GROUP	H. Wiel	10-22-68
DRAWN	F. RUNNER	10-16-68
CHECK	J. HARRIS	10/17/68
STRESS	R.F.GEIDE	10-21-68
PROJECT	J.D. H.	10-22-68
APPD	SWANEY	10/18/68

Cessna AIRCRAFT CO.
COMMERCIAL AIRCRAFT DIV.
5800 E. PAWNEE
WICHITA, KANSAS

TITLE
WIRING DIAGRAM —
CESSNA 300 NAV-O-MATIC
AUTOPILOT (14VOLT)

SIZE	CODE IDENT. NO.	DWG NO.
C	71379	1270800

SCALE: NONE | 207 | PAGE 17.1.1

FORM NO. 80-215A

ED+RR 10150 (SR 5707) IX

REVISION			
LET	DESCRIPTION	DATE	APPD

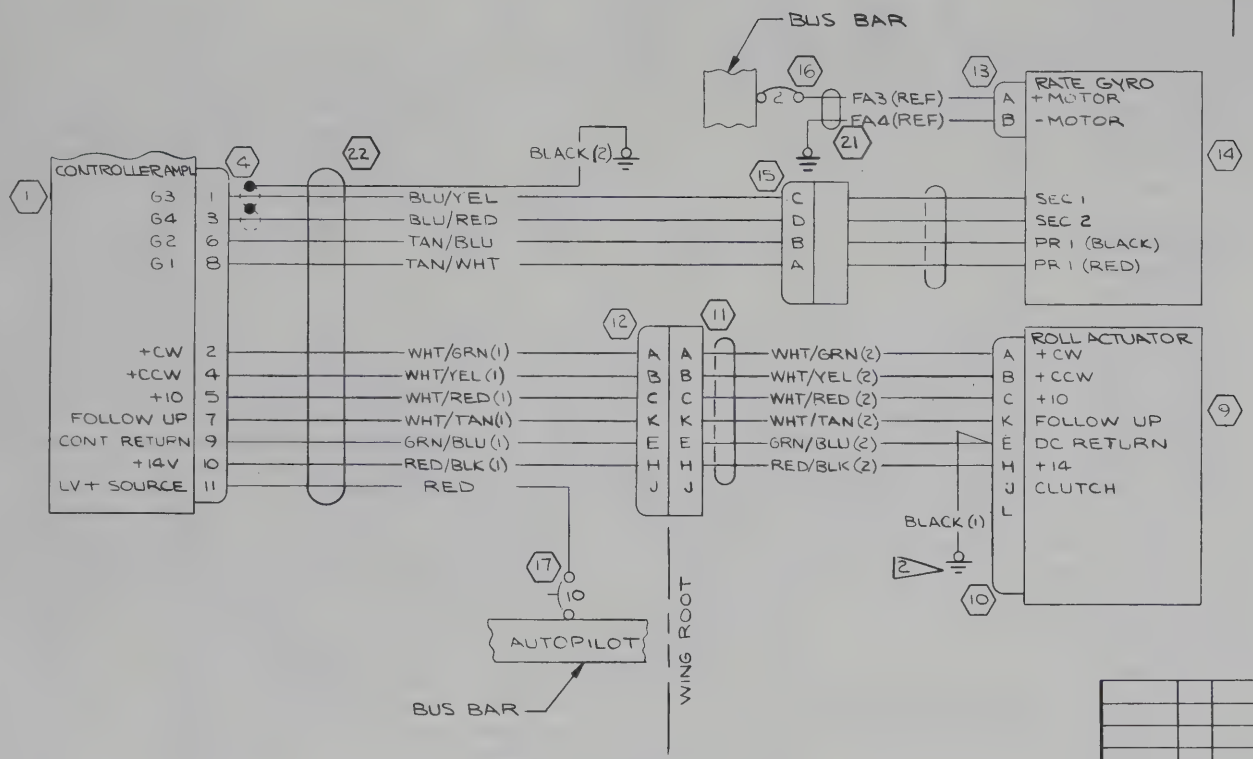

WIRE CODE NO.	GA	MATERIAL	LG	TERMINALS		SERIALS

WIRE TABLE

ITEM NO.	PART NO.	DESCRIPTION
		EQUIPMENT TABLE

CES-1000 IS APPLICABLE VENDOR CODES PER S-1400
CES-XXXX=CESSNA SPEC. NO.
S-XXX OR CMXXXX=CESSNA STD. NO.

SUPERSEDES:

SUPERSEDED BY:

CONTRACT NO:

	NAME	DATE
DESIGN	HENSHAW	10-22-68
GROUP	H. Wied	10-22-68
DRAWN	F. RUNNER	10-16-68
CHECK	J. HARRIS	10/17/68
STRESS	R.F. GEIDE	10-21-68
PROJECT	[illegible]	10-22-68
APPD	SWANEY	10/18/68

Cessna AIRCRAFT CO.
COMMERCIAL AIRCRAFT DIV.
5800 E. PAWNEE
WICHITA, KANSAS

TITLE
WIRING DIAGRAM — CESSNA 300 NAV-O-MATIC AUTOPILOT (14VOLT)

SIZE	CODE IDENT. NO.	DWG NO.
C	71379	1270800

SCALE: NONE | 207 | PAGE. 17.1.2

FORM NO 80-215A

ED 1 RR 10150 (SR5107) IX

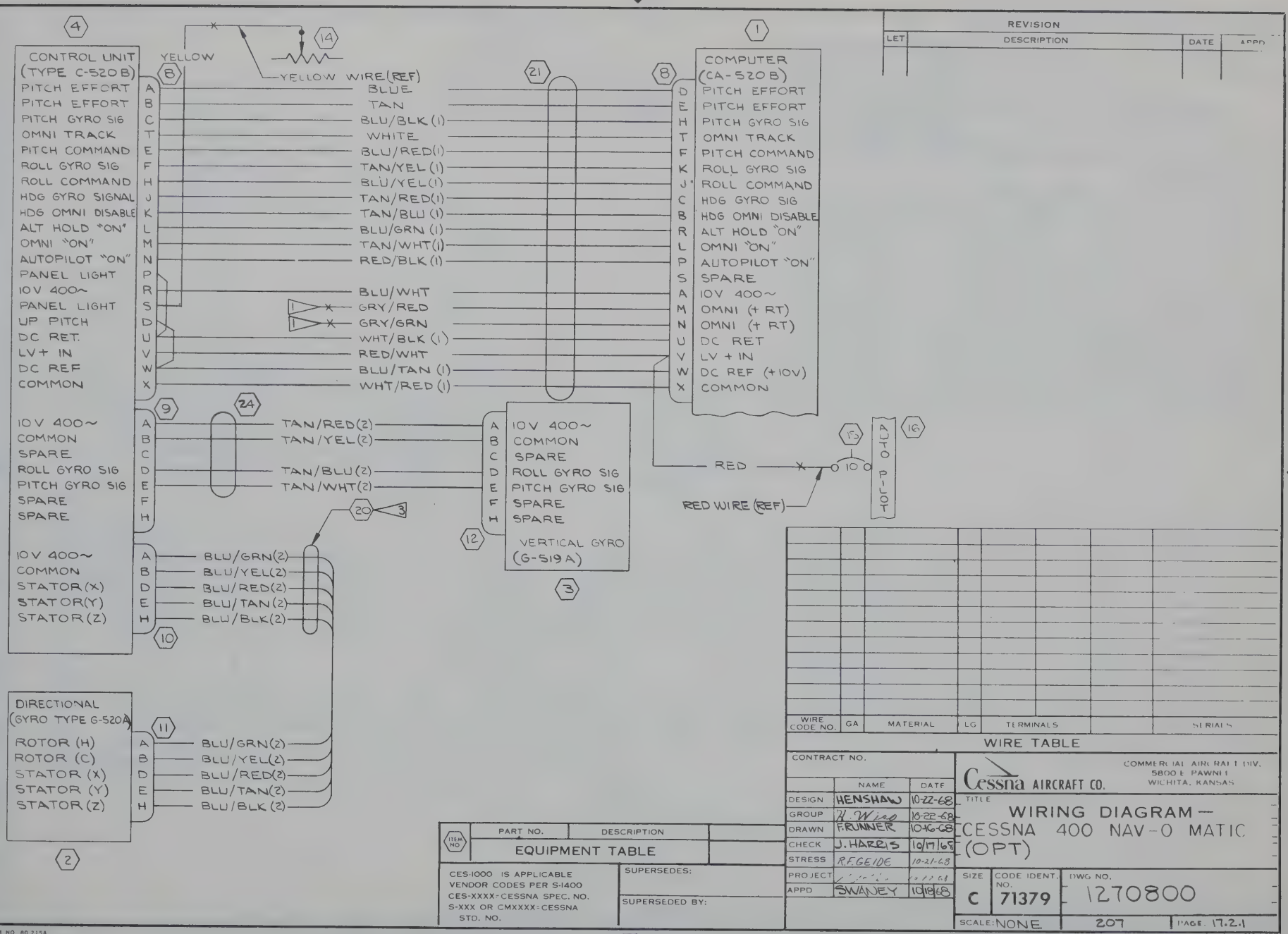

REVISION			
LET	DESCRIPTION	DATE	APPD

WIRE CODE NO.	GA	MATERIAL	LG	TERMINALS		SERIALS

WIRE TABLE

ITEM NO	PART NO.	DESCRIPTION

EQUIPMENT TABLE

CES-1000 IS APPLICABLE VENDOR CODES PER S-1400
CES-XXXX=CESSNA SPEC. NO.
S-XXX OR CMXXXX=CESSNA STD. NO.

SUPERSEDES:

SUPERSEDED BY:

CONTRACT NO.

	NAME	DATE
DESIGN	HENSHAW	10-22-68
GROUP	H. Wind	10-22-68
DRAWN	F.RUNNER	10-16-68
CHECK	J. HARRIS	10/17/68
STRESS	R.EGEIDE	10-21-68
PROJECT		
APPD	SWANEY	10/18/68

Cessna AIRCRAFT CO.
COMMERCIAL AIRCRAFT DIV.
5800 E PAWNEE
WICHITA, KANSAS

TITLE
WIRING DIAGRAM — CESSNA 400 NAV-O MATIC (OPT)

SIZE	CODE IDENT. NO.	DWG NO.
C	71379	1270800

SCALE: NONE | 207 | PAGE 17.2.1

FORM NO 80 215A

EDITRR 10150(SR 5707) IX

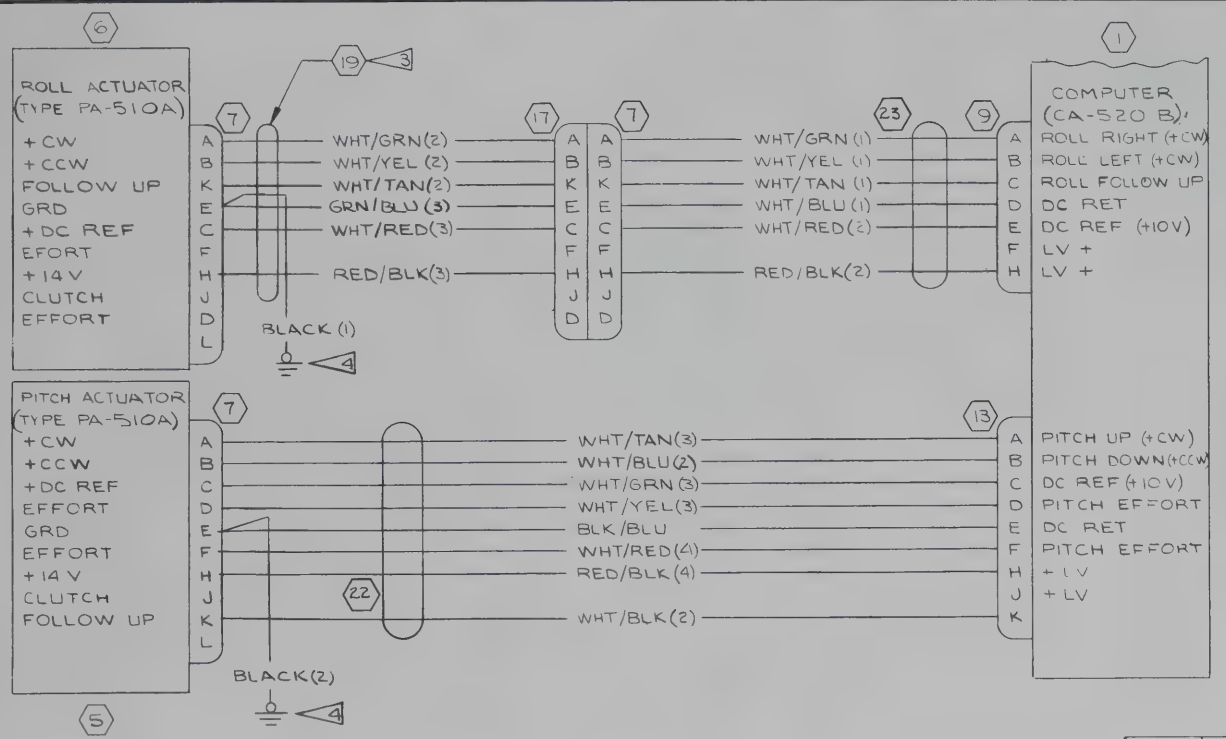

REVISION			
LET	DESCRIPTION	DATE	APPD

WIRE CODE NO.	GA	MATERIAL	LG	TERMINALS		SERALS

WIRE TABLE

ITEM NO	PART NO.	DESCRIPTION
		EQUIPMENT TABLE

CES-1000 IS APPLICABLE
VENDOR CODES PER S-1400
CES-XXXX=CESSNA SPEC. NO.
S-XXX OR CMXXXX-CESSNA STD. NO.

SUPERSEDES:

SUPERSEDED BY:

CONTRACT NO:

	NAME	DATE
DESIGN	HENSHAW	10-22-68
GROUP	H. Wise	10-22-68
DRAWN	F. RUNNER	10-16-68
CHECK	J. HARRIS	10-17-68
STRESS	R.F. GEIDE	10-21-68
PROJECT		
APPD	SWANEY	10/18/68

Cessna AIRCRAFT CO.
COMMERCIAL AIRCRAFT DIV.
5800 E PAWNEE
WICHITA, KANSAS

TITLE
WIRING DIAGRAM — CESSNA 400 NAV-O-MATIC (OPT)

SIZE	CODE IDENT. NO.	DWG NO.
C	71379	1270800

SCALE: NONE | 207 | PAGE: 17.2.2

FORM NO 80 2154

ED & RR 10150 (SR 5707) IX

REVISION			
LET	DESCRIPTION	DATE	APPD

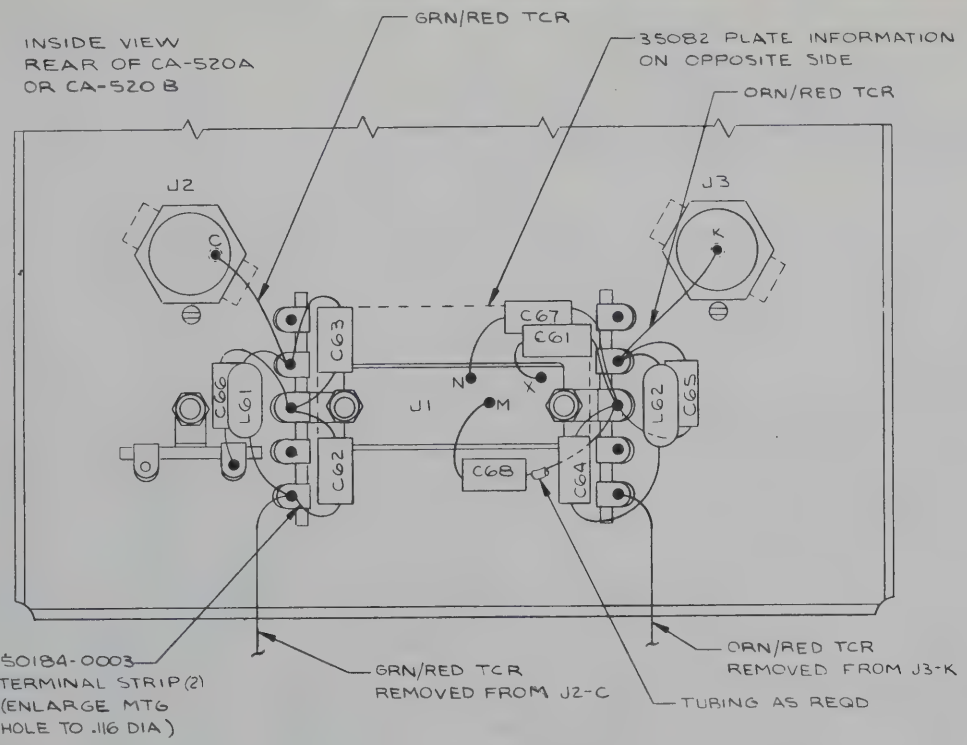

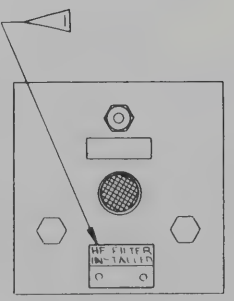

SCHEMATIC DIAGRAM

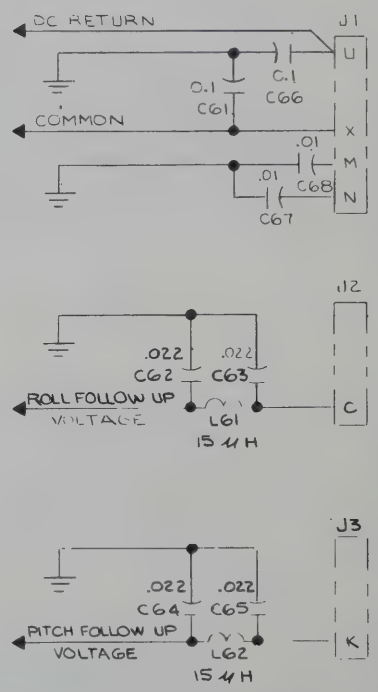

NOTES:

1. TO BE MOUNTED WITH EXISTING SCREWS WHEN MODIFICATION HAS BEEN COMPLETED
2. REMOVE NUTS FROM CONNECTOR J1, BACK OUT CONNECTOR, INSTALL INFORMATION PLATE 35082 REPLACE CONNECTOR ON CHASSIS THEN INSTALL TWO TERMINAL STRIPS 50184-0003 AS SHOWN USING CONNECTOR MTG SCREWS, REINSTALL NUTS
3. INSTALL CAPACITORS AND CHOKES AS SHOWN IN WIRING AND SCHEMATIC DIAGRAMS
4. UNSOLDER WIRES FROM J2-C AND J3-K AND RESOLDER TO NEW LOCATIONS AS SHOWN
5. CONTACTING SURFACES BETWEEN COMPUTER AND SHELF MUST BE CLEAN AND FREE OF CONTAMINANTS IN ORDER TO MAKE POSITIVE ELECTRICAL CONTACT

FILTER KIT

ITEM NO.	ARC PART NO.	DESCRIPTION	QTY
1	32423-9223	.022 μF CAPACITOR	4
2	32423-9103	.010 μF CAPACITOR	2
3	32423-9102	.100 μF CAPACITOR	2
4	31193-0150	15 μH CHOKE	2
5	50184-0003	TERMINAL STRIP	2
6	35082	INFORMATION PLATE	1
7	21471-0502 (3")	GREEN/RED WIRE	1
8	21471-0302 (3")	ORANGE/RED WIRE	1
9	8800-0032 (6")	TUBING	1
10	35094	DRAWING	1

ITEM NO.	PART NO.	DESCRIPTION
	EQUIPMENT TABLE	

CES-1000 IS APPLICABLE
VENDOR CODES PER S-1400
CES-XXXX=CESSNA SPEC. NO.
S-XXX OR CMXXXX=CESSNA STD. NO.

SUPERSEDES:

SUPERSEDED BY:

CONTRACT NO:

	NAME	DATE
DESIGN	HENSHAW	10-22-68
GROUP	H. Wise	10-22-68
DRAWN	F. RUNNER	10-16-68
CHECK	J. HARRIS	10/17/68
STRESS	R.F. GEIDE	10-21-68
PROJECT	[illegible]	10 22 68
APPD	SWANEY	10/18/68

Cessna AIRCRAFT CO.
COMMERCIAL AIRCRAFT DIV.
5800 E PAWNEE
WICHITA, KANSAS

TITLE
WIRING DIAGRAM — NAV-O-MATIC 400 SYSTEM (OPT)

SIZE	CODE IDENT. NO.	DWG NO.
C	71379	1270800

SCALE: NONE | 207 | PAGE 17.2.3

FORM NO 80-215A

ED&RR 10150 (SR 5707) IX

TABLE OF CONTENTS

PAGE NO.	TITLE	DATE ISSUED	REV
	210 SERIAL 21059062 & ON T210 SERIAL T210-0393 & ON		
2.0.2	Radio Speaker Phone Jack Mike, Light Rheo & Power Circuits	10-17-68	A
2.0.3	S. D. - Audio Junction Box, Internal Wiring	3-7-69	NC
2.3.1.4	Cessna 300 Nav/Com (Type 540A, 517R with IN-525A, IN-514)	8-14-68	NC
2.4.2	W. D. - Cessna Marker Beacon (ARC Type 502B)	10-17-68	A
2.6.0	Cable Assy - Audio, Omni & Xmtr Selector Switches	9-20-68	B
2.6.1.1	W. D. - Audio Selector Switch	9-20-68	A
2.6.2.1	W. D. - Omni Audio Transmitter Switch	8-14-67	NC
2.6.3.1	W. D. - Transmitter Selector Switch	10-17-68	A
2.6.8.1	W. D. - Typical Switching, Narco Mark 12A & ADF	12-5-68	NC
2.7.2.1	Cessna 300 Com (ARC Type 524A)	10-17-68	A
2.12	Cessna ADF 300 (ARC Type 521B)	8-14-68	B
2.20.3	Cessna 300 DME	1-14-68	NC
2.25.2	Cable Assy - Narco Mark 12 & 12A	10-17-68	A
2.25.4	W. D. - Narco Mark 12A with VOA-6, VOA-8 & VOA-9	8-14-68	NC
2.35.2	W. D. - King KA-25C Audio Amplifier	10-17-68	A
2.38.1	W. D. - Narco UGR-2 Glideslope with Narco Mark 12A & VOA-9	11-28-67	A
2.43.1	W. D. - Cessna 400 Glideslope (ARC Type R543B)	12-21-67	A
2.44.1	W. D. - Cessna 400 Glideslope (ARC Type R543B)	12-21-67	A
2.45.3.1	Cessna 400 Nav/Com (ARC Type RT-522A & RT-532A)	10-17-68	A
2.45.3.2	Cessna 400 Nav/Com (ARC Type RT-522A & RT-532A)	10-17-68	A
2.47	Pitch Trim, Mike & Map Light Control Wheel	10-30-68	D

TABLE OF CONTENTS

PAGE NO.	TITLE	DATE ISSUED	REV
2.48	W. D. - Pitch Trim & Mike Switch Control Wheel	12-11-67	C
2.49	W. D. - Pitch Trim & Map Light Control Wheel	12-11-67	B
2.50	W. D. - Mike Key, Control Wheel Mounted	10-4-67	B
2.51.1	Cessna 400 Transponder (ARC Type 506A)	4-23-68	C
2.52	W. D. - Mike Key - Control Wheel	11-28-67	NC
2.54.1.1	Cessna 300 HF	3-1-68	NC
2.54.1.2	Cessna 300 HF	3-1-68	NC
2.58.0	W. D. - Cessna 400 ADF (Type 324A)	10-2-68	A
2.60.1	Cable Assembly - Cessna 300 Transponder	2-3-69	A
	DRAWING NUMBER 1270405		
17.23.3	W. D. - Cessna 400 Nav-O-Matic (Opt.)	7-23-68	A
17.23.4	W. D. - Cessna 400 Nav-O-Matic (Opt.)	7-23-68	A
17.23.5	W. D. - Cessna Nav-O-Matic 400 System	6-6-68	NC
17.26.1	W. D. - Cessna 300 Nav-O-Matic Autopilot (14-Volt)	7-23-68	A
17.26.2	W. D. - Cessna 300 Nav-O-Matic Autopilot (14-Volt)	6-6-68	NC

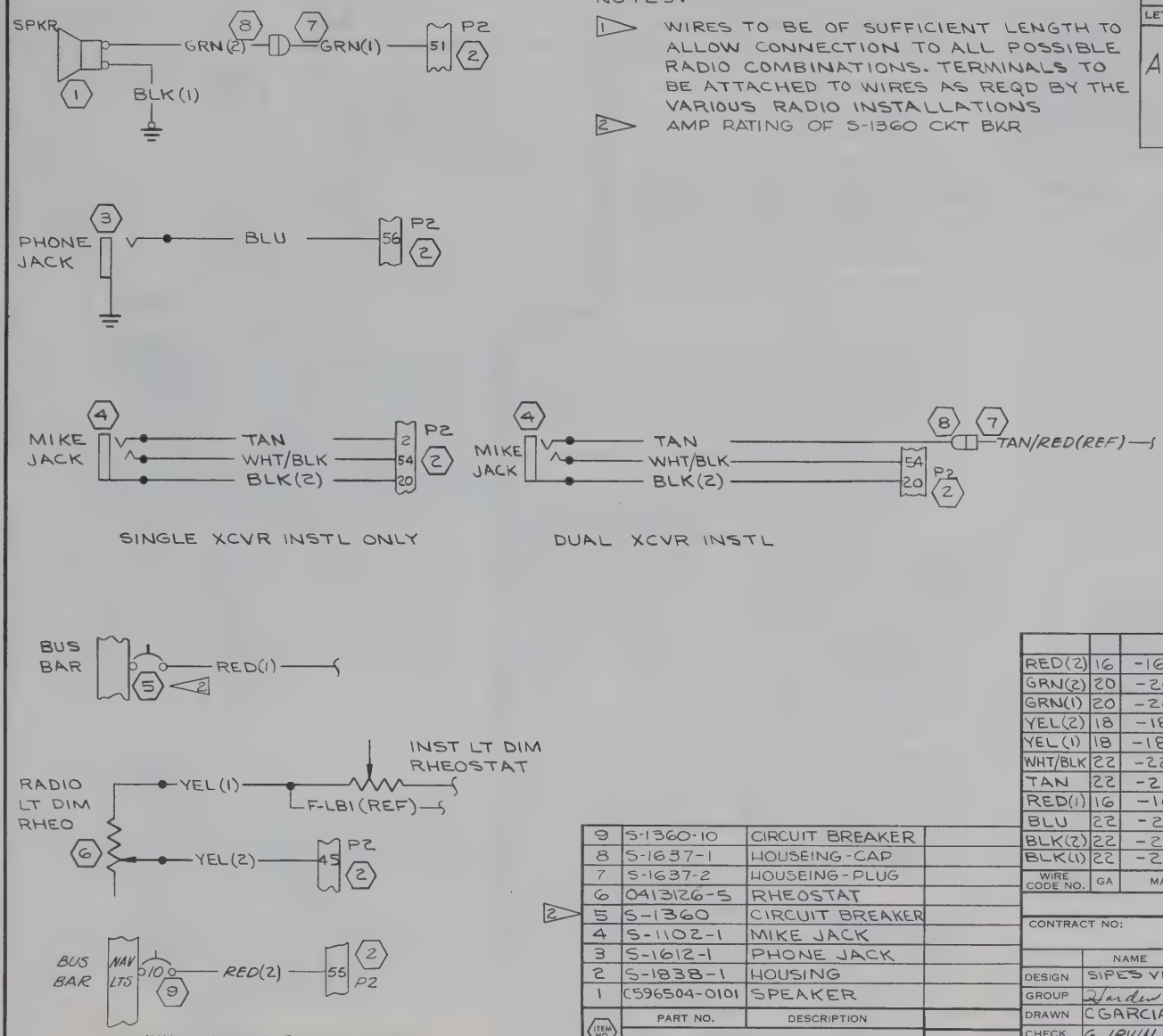

NOTES:

1. WIRES TO BE OF SUFFICIENT LENGTH TO ALLOW CONNECTION TO ALL POSSIBLE RADIO COMBINATIONS. TERMINALS TO BE ATTACHED TO WIRES AS REQD BY THE VARIOUS RADIO INSTALLATIONS
2. AMP RATING OF S-1360 CKT BKR

REVISION			
LET	DESCRIPTION	DATE	APPD
A	BY REV: REROUTE TAN TO S-1637-2 WAS S-1838-1; REROUTE WHT/BLK TO S-1838-1 WAS TO XMTR SEL SW; ADD J-BOX POWER SOURCE WIRING; RED(1) WAS RED ED&RR 10155 (SR5403)(SR5404) IX	EGY 10-7-68	JWH MDS RFG NRW HMC

ITEM NO.	PART NO.	DESCRIPTION
9	S-1360-10	CIRCUIT BREAKER
8	S-1637-1	HOUSEING-CAP
7	S-1637-2	HOUSEING-PLUG
6	0413126-5	RHEOSTAT
5	S-1360	CIRCUIT BREAKER
4	S-1102-1	MIKE JACK
3	S-1612-1	PHONE JACK
2	S-1838-1	HOUSING
1	C596504-0101	SPEAKER

EQUIPMENT TABLE

WIRE CODE NO.	GA	MATERIAL	LG	TERMINALS			SERIALS
RED(2)	16	-16-2		S-1367-2-6	1		
GRN(2)	20	-20-5	118	S-1635-1	S-1837-1		
GRN(1)	20	-20-5	8	S-1829-1	S-1636-1		
YEL(2)	18	-18-4	60	S-1837-1	SOLDER		
YEL(1)	18	-18-4		SOLDER	SOLDER		
WHT/BLK	22	-22-9-0	72	S-1837-1	SOLDER		
TAN	22	-22-10	72	S1635-1	SOLDER		
RED(1)	16	-16-2	60	S-1367-2-6	S-1837-1		
BLU	22	-22-6	65	S-1837-1	SOLDER		
BLK(2)	22	-22-0	72	S-1367-1-8	SOLDER		
BLK(1)	22	-22-0	8	S-1829-1	S-1367-1-8		

WIRE TABLE

CES-1000 IS APPLICABLE
VENDOR CODES PER S-1400
CES-XXXX=CESSNA SPEC. NO.
S-XXX OR CMXXXX=CESSNA STD. NO.

SUPERSEDES: P 2.0.1

SUPERSEDED BY:

CONTRACT NO:

	NAME	DATE
DESIGN	SIPES VR	6/10/68
GROUP	Harden	8-13-68
DRAWN	C GARCIA	7-17-68
CHECK	G. IRVIN	8-9-68
STRESS	N.F. GEIDE	8-12-68
PROJECT	[illegible]	8-14-68
APPD	SWANEY	8-12-68

Cessna AIRCRAFT CO.
COMMERCIAL AIRCRAFT DIV.
5800 E. PAWNEE
WICHITA, KANSAS

TITLE
WIRING DIAGRAM — RADIO SPEAKER PHONE JACK MIKE, LIGHT RHEO & POWER CIRCUITS

SIZE C | CODE IDENT. NO. 71379 | DWG NO. 1270475

SCALE: NONE | 210-T210 | PAGE: 2.0.2

FORM NO. 80-215A

ED&RR(02366) (SR5403)(SR5404) IX

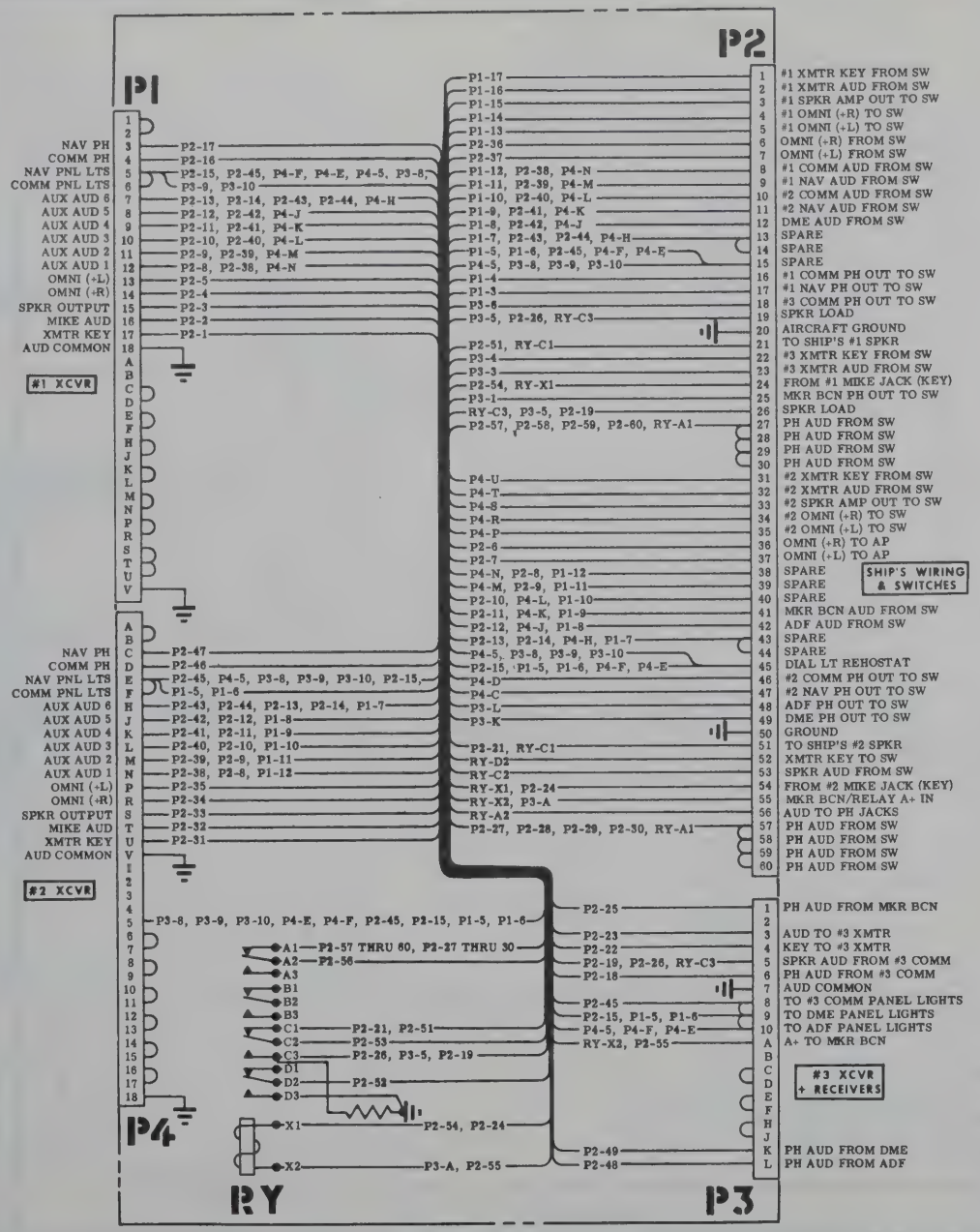

REVISIONS			
LTR	DESCRIPTION	DATE	APPROVED
A	BY REV: 465195-2 WAS 46195-2; ADD NOTE 8 EDRR 24170	DGP 4-'69	

NOTES:

1. THIS DRAWING FOR TECHNICAL USE ONLY
2. P1 AND P4 MATE WITH S-1838-2 HOUSING (AMP 1-582191-5)
3. P2 MATES WITH S-1838-1 HOUSING (AMP 480146-7)
4. P3 MATES WITH S-1838-3 HOUSING (AMP 582963-2)
5. ALL THE ABOVE HOUSINGS USE S-1837-1 CONTACT PINS (AMP 42717-3LP) AND S-1836-1 KEYING PLUGS (AMP 582501-1)
6. CONTACTS CRIMP ON WITH AMP TOOL 90017
7. CONTACTS EXTRACT WITH AMP TOOL 465195-2
8. IF A CRIMPING TOOL IS NOT AVAILABLE WIRES MAY BE SOLDERED TO PINS IN LIEU OF CRIMPING

CONTRACT NO:	NAME	DATE
DESIGN	V R SIPES	1-13-69
GROUP	[illegible]	3-11-69
DRAWN	NUCKOLLS	2-7-69
CHECK	HARRIS	3-4-69
STRESS	R.F.GEIDE	3-7-69
PROJECT	H. McCarter	3-12-69
APPD	M.O'Leary	3-5-69

Cessna AIRCRAFT CO.
COMMERCIAL AIRCRAFT DIV.
5800 E. PAWNEE
WICHITA, KANSAS

TITLE
SCHEMATIC DIAGRAM - AUDIO JUNCTION BOX, INTERNAL WIRING

SIZE	CODE IDENT. NO.	DWG NO.
C	71379	1270475

SCALE: NONE | 210 & T210 | PAGE: 2.0.3

ED & RR 10361 SER 21059062 & ON
SER T210-0393 & ON

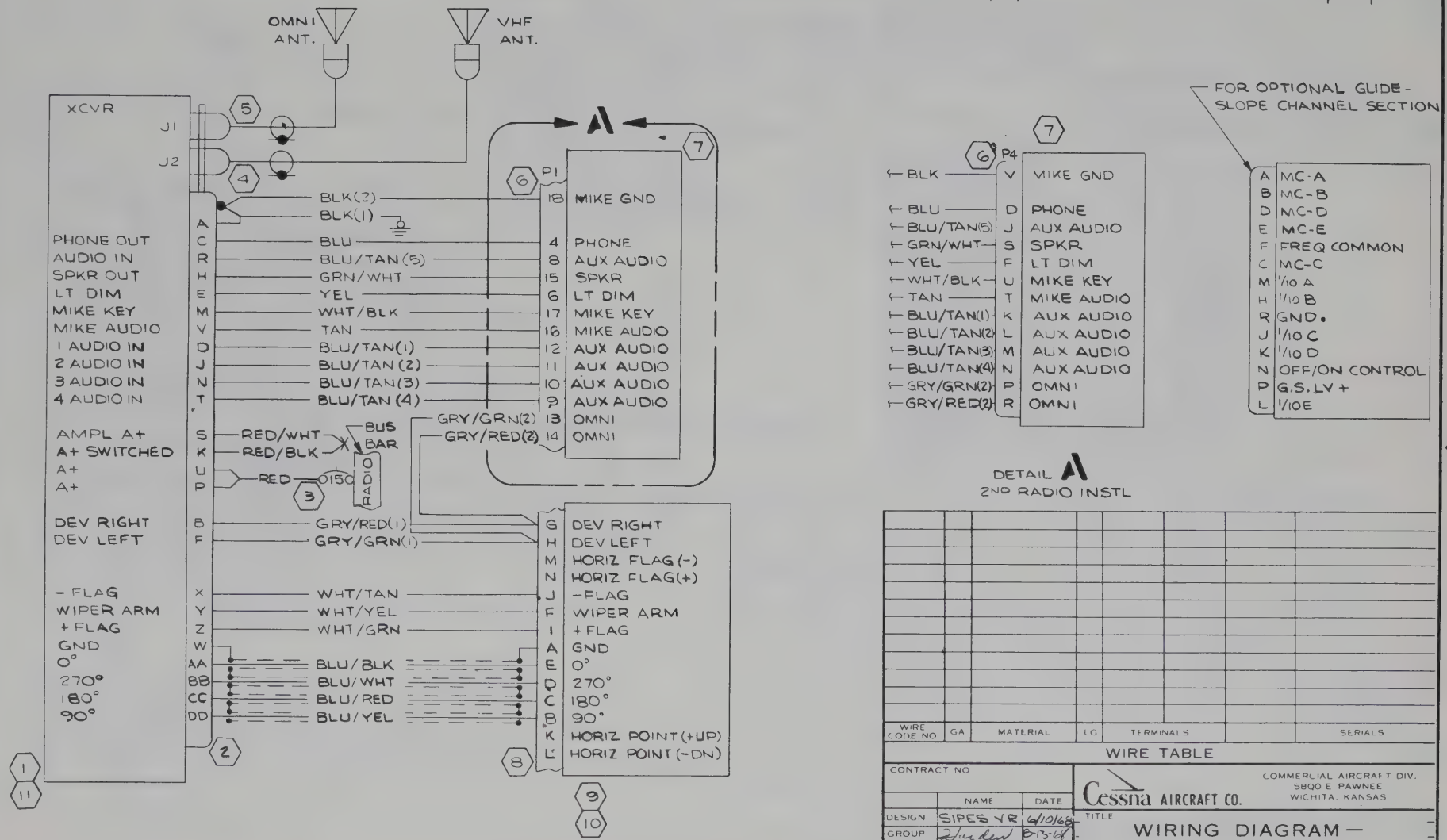

REVISION			
LET	DESCRIPTION	DATE	APPD

WIRE CODE NO	GA	MATERIAL	LG	TERMINALS		SERIALS

WIRE TABLE

ITEM NO.	PART NO.	DESCRIPTION
		EQUIPMENT TABLE

CES-1000 IS APPLICABLE VENDOR CODES PER S-1400
CES-XXXX=CESSNA SPEC. NO.
S-XXX OR CMXXXX=CESSNA STD. NO.

SUPERSEDES: P 2.3.1.2

SUPERSEDED BY:

CONTRACT NO

	NAME	DATE
DESIGN	SIPES VR	6/10/68
GROUP	Linden	8-13-68
DRAWN	YARBROUGH	7-24-68
CHECK	G. IRVIN	8-9-68
STRESS	R.F. GEIDE	8-13-68
PROJECT		
APPD	SWANEY	8-13-68

Cessna AIRCRAFT CO.
COMMERCIAL AIRCRAFT DIV.
5800 E PAWNEE
WICHITA, KANSAS

TITLE
WIRING DIAGRAM — CESSNA 300 NAV/COM (TYPE 540A, 517R WITH IN-525A & IN-514)

SIZE	CODE IDENT NO	DWG NO
C	71379	1270475

SCALE: NONE | 210 & T210 | PAGE 2.3.1.4

FORM NO 80-215A

EDERR02394 (SR5403)(SR5404) IX

REVISION			
LET	DESCRIPTION	DATE	APPD
A	BY REV: RED/GRN A/P3 WAS 55/P2; ADD RED(REF), S-1360-10 & BUS BAR ED & RR 10155 (SR5403)(SR5404)	EGY 10-8-68	[illegible]

NOTES:

1. "PHONE" & "LO" FUNCTION TO BE ON KEY WAY SIDE OF SW

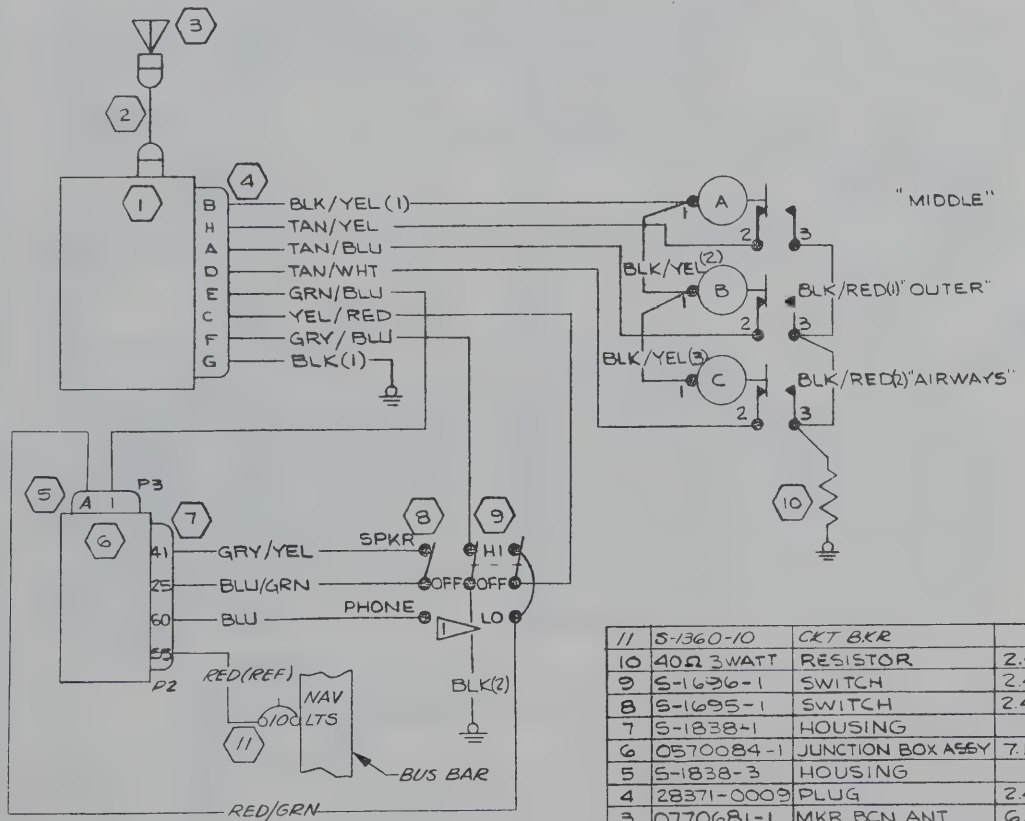

WIRE CODE NO.	GA	MATERIAL	LG	TERMINALS			SERIALS
BLK/RED(2)	22	-22-0-2		SOLDER	SOLDER		
BLK/RED(1)	22	-22-0-4		SOLDER	SOLDER		
YEL/RED	20	-20-4-2		SOLDER	SOLDER		
TAN/YEL	22	-22-10-4			SOLDER		
TAN/WHT	22	-22-10-9			SOLDER		
TAN/BLU	22	-22-10-6			SOLDER		
RED/GRN	22	-22-2-5			S-1837-1		
GRY/YEL	22	-22-8-4			S-1837-1		
GRY/BLU	22	-22-8-6			SOLDER		
GRN/BLU	20	-20-5-6			S-1837-1		
BLU/GRN	22	-22-6-5			S-1837-1		
BLU	22	-22-6			S-1837-1		
BLK/YEL(3)	22	-22-0-4			SOLDER		
BLK/YEL(2)	22	-22-0-4			SOLDER		
BLK/YEL(1)	22	-22-0-4			SOLDER		
BLK (2)	22	-22-0		SOLDER	S-1367-1-8		
BLK (1)	22	-22-0		SOLDER	S-1367-1-8		

WIRE TABLE

ITEM NO.	PART NO.	DESCRIPTION	PAGE
11	S-1360-10	CKT BKR	
10	40Ω 3WATT	RESISTOR	2.4.0
9	S-1696-1	SWITCH	2.4.0
8	S-1695-1	SWITCH	2.4.0
7	S-1838-1	HOUSING	
6	0570084-1	JUNCTION BOX ASSY	7.14
5	S-1838-3	HOUSING	
4	28371-0009	PLUG	2.4.0
3	0770681-1	MKR BCN ANT	6.6
2	-204	CABLE ASSY	2.4.0
1	31240-0014	MKR BCN RCVR	4.5

EQUIPMENT TABLE

CES-1000 IS APPLICABLE
VENDOR CODES PER S1400
CES-XXXX=CESSNA SPEC. NO.
S-XXX OR CMXXXX=CESSNA STD. NO.

SUPERSEDES: 1270475 FG 2.4.1

SUPERSEDED BY:

CONTRACT NO:

	NAME	DATE
DESIGN	SIPES VR	6/10/68
GROUP	[illegible]	8-13-68
DRAWN	C GARCIA	8-3-68
CHECK	G. IRVIN	8-9-68
STRESS	[illegible]	[illegible]
PROJECT	[illegible]	[illegible]
APPD	[illegible]	[illegible]

Cessna AIRCRAFT CO.
COMMERCIAL AIRCRAFT DIV
5800 E. PAWNEE
WICHITA, KANSAS

TITLE
WIRING DIAGRAM — CESSNA 300 MARKER BEACON (TYPE 502B)

SIZE	CODE IDENT NO	DWG NO
C	71379	1270475

SCALE NONE | 210 T210 | PAGE 2.4.2

ED&RR02366 (SR5403) (SR5404)

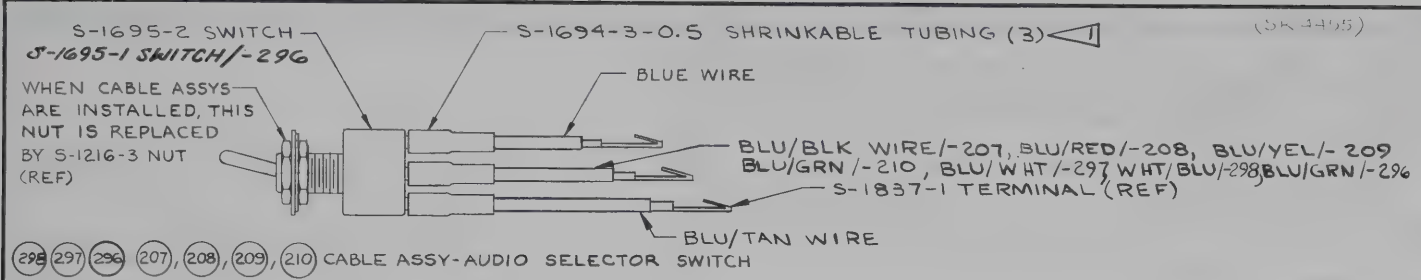

(298) (297) (296) (207), (208), (209), (210) CABLE ASSY-AUDIO SELECTOR SWITCH

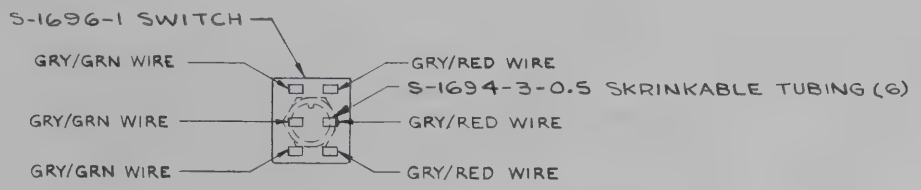

(211) CABLE ASSY-OMNI SELECTOR SWITCH (REAR VIEW)

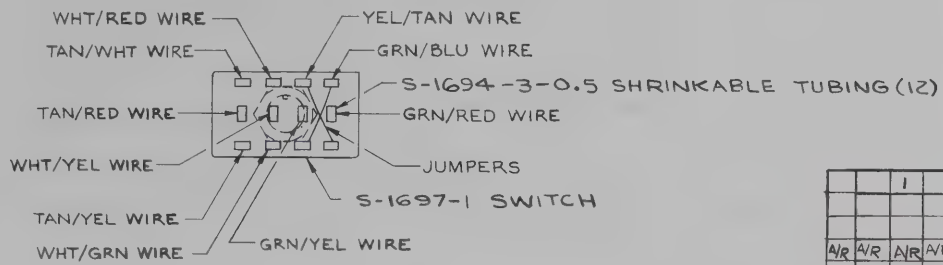

(212) CABLE ASSY-TRANSMITTER SELECTOR SWITCH (REAR VIEW)

NOTES:

1. SHRINKABLE TUBING INSTALLED ON ALL SWITCHES AS SHOWN ON AUDIO SELECTOR SWITCH.
2. ~~NUMBERS IN PARENTHESES ARE TERMINAL BOARD NUMBERS (CONNECTOR). NUMBERS TO BE STAMPED ON WIRES PER CES-1016.~~
3. ~~WIRE NUMBERS MARK AS FOLLOWS: -207 (GRY/GRN), -208 (GRY/RED), -209 (GRY/GRN), -210 (GRY/RED), -211 (GRY/GRN), -212 (GRY/RED).~~
4. SWITCHES SHOWN WITH KEYWAY AT TOP.
5. ALL WIRES ARE REFERENCED. REFER TO APPLICABLE WIRE DIAGRAM FOR FABRICATION OF WIRES.

CHG LET	REVISION	BY DATE	CHK APPD
A	BY REV: S-1695-2 WAS MST-105D, S-1696-1 WAS MST-205N, S-1697-1 WAS MST-405N, S-1694-3-0.5 WAS FIT-105-3/32 x 1/2; ADD S-1837-1 (REF); DELETE ALL PIN TERM. NO. CALLOUTS & NOTE 2 & 3 ED&RR 02366 (SR5403)(SR5404)	CG 7-19-68	GKL MDS WHH
B	BY REV: ADD -296, -297, -298 ED&RR 10069 (SR5403)(SR5404)	FER 9-11-68	RCA MDS
C	BY REV: ADD S-1695-1 ED&RR 10391	R.S. 3-6-69	WHH

-298	-297	-296	-212	-211	-210	-209	-208	-207			S-1695-1	SWITCH
		1									-298	ASSY-ADF SEL
											-297	ASSY-DME SEL
A/R	A/R	A/R	A/R							2.6.1.J		WIRING
				A/R						2.6.2.1		WIRING
					A/R	A/R	A/R	A/R		2.6.3.1		WIRING
3	3	3	12	6	3	3	3	3			S-1694-3-0.5	SKRINKABLE TUBING
			1								S-1697-1	SWITCH
				1							S-1696-1	SWITCH
1	1				1	1	1	1			S-1695-2	SWITCH
											-296	CABLE ASSY-MKR BCN SW
											-212	CABLE ASSY-XMTR SEL
											-211	CABLE ASSY-OMNI SEL
											-210	ASSY-AUD SEL REV 2
											-209	ASSY-AUD SEL REV 2
											-208	ASSY-AUD SEL REV 1
											-207	ASSY-AUD SEL REV 1
-298	-297	-296	-212	-211	-210	-209	-208	-207	EFFECTIVE SERIALS	PAGE NO.	PART NUMBER	DESCRIPTION
NO REQD/ NEXT ASSY									LIST OF MATERIALS			

UNLESS OTHERWISE SPECIFIED		
DIMENSIONS ARE IN INCHES TOLERANCES ARE		
DECIMALS	ANGLES	
00 ±.03	MACH	FORMED
000 ±.010	±0 30'	±2°
DO NOT SCALE PRINT		
CES-1000 IS APPLICABLE		

CESSNA AIRCRAFT CO., COMMERCIAL AIRCRAFT DIVISION, WICHITA, KANSAS

	NAME	DATE
DRAWN	G WOOD	4-18-69
GROUP		
CHECK		7-10-69
STRESS		
PROJ		

TITLE: CABLE ASSEMBLY-AUDIO, OMNI & XMTR SELECTOR SWITCHES

Cessna.

DWG NO 1270475

SUPERSEDED BY | SUPERSEDES | SCALE 2:1 | REV C | PAGE 2.6.0

RAD-0 FORM

REVISION			
LET	DESCRIPTION	DATE	APPD
A	BY REV: ADD MARKER BEACON SEL SW & WIRING; S-1695-2 WAS S-1693-2. EDT RR 10069 (SR5403)(SR5404) IX	FER 5-11-68	RCA MDS KFG VRS

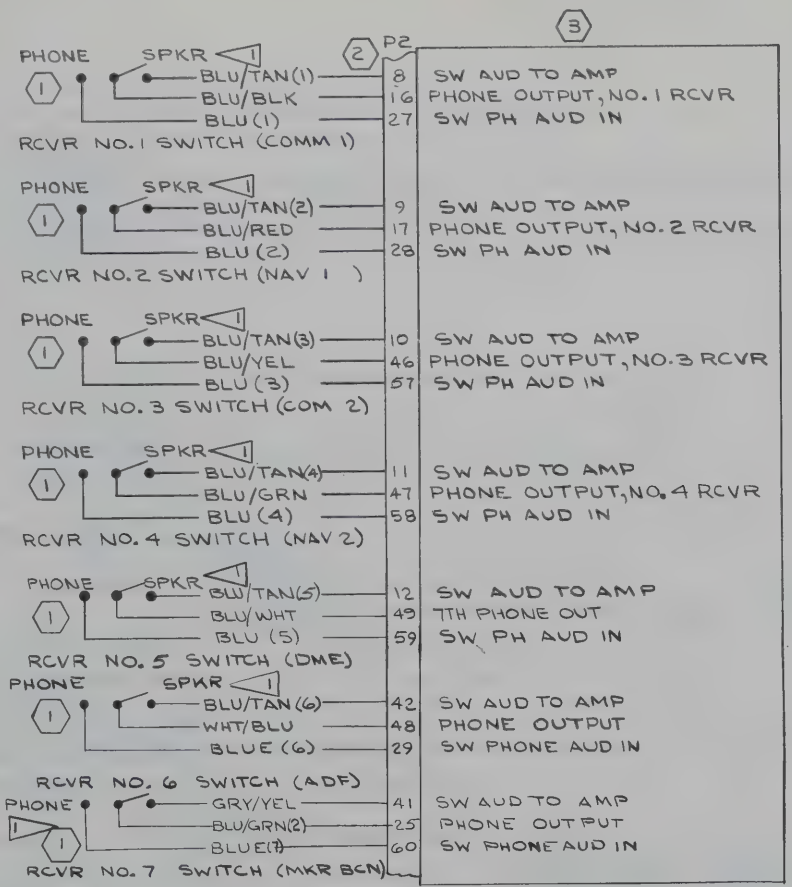

WIRE CODE NO.	GA	MATERIAL	LG	TERMINALS		SERIALS
WHT/BLU	22	-22-8-6		SOLDER	S-1837-1	
BLU (7)	22	-22-6-5				
BLU/GRN(2)	22	-22-6				
BLU/TAN(6)	22	-22-6-10				
BLU/TAN(5)	22	-22-6-10				
BLU(6)	22	-22-6				
BLU/TAN(4)	22	-22-6-10		SOLDER	S-1837-1	
BLU/WHT	22	-22-6-9		SOLDER	S-1837-1	
BLU(5)	22	-22-6		SOLDER	S-1837-1	
GRN/YEL	22	-22-8-4		SOLDER	S-1837-1	
BLU/YEL	22	-22-6-4				
BLU/GRN	22	-22-6-5				
BLU/TAN(3)	22	-22-6-10				
BLU/TAN(2)	22	-22-6-10				
BLU/TAN(1)	22	-22-6-10				
BLU/RED	22	-22-6-2				
BLU/BLK	22	-22-6-0				
BLU(4)	22	-22-6				
BLU(3)	22	-22-6				
BLU(2)	22	-22-6				
BLU(1)	22	-22-6		SOLDER	S-1837-1	

WIRE TABLE

NOTES:

1. SPKR FUNCTION ON KEYWAY SIDE OF SWITCH.

ITEM NO.	PART NO.	DESCRIPTION	PAGE
3	0570084-1	JUNCTION BOX ASSY	7.14
2	S-1838-1	HOUSING	
1	S-1695-2	SWITCH	2.6.0

EQUIPMENT TABLE

CES-1000 IS APPLICABLE
VENDOR CODES PER S-1400
CES-XXXX=CESSNA SPEC. NO.
S-XXX OR CMXXXX=CESSNA
STD. NO.

SUPERSEDES: 1270475 P 2.6.1

SUPERSEDED BY:

CONTRACT NO:

	NAME	DATE
DESIGN	SIPES YR	4/10/68
GROUP	Warlow	8-13-68
DRAWN	C. GARCIA	8-3-68
CHECK	G. IRWIN	8-9-68
STRESS	Y.F. GEIDE	8-12-68
PROJECT	[illegible]	8-14-68
APPD	SWANEY	8-12-68

Cessna AIRCRAFT CO.
COMMERCIAL AIRCRAFT DIV.
5800 E. PAWNEE
WICHITA, KANSAS

TITLE: WIRING DIAGRAM — AUDIO SELECTOR SWITCH

SIZE	CODE IDENT. NO.	DWG NO.
C	71379	1270475

SCALE: NONE | 210-T210 | PAGE: 2.6.1.1

FORM NO. 80-215A

EDT RR 02366 (SR5403)(SR5404) IX

NOTES:

1. OMNI 2 FUNCTION TO BE ON KEYWAY SIDE OF SWITCH

REVISION			
LET	DESCRIPTION	DATE	APPD

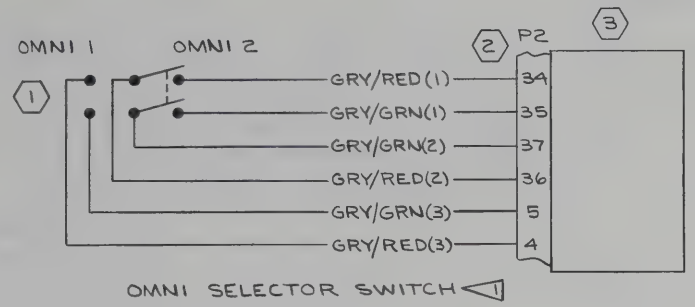

WIRE CODE NO.	GA	MATERIAL	LG	TERMINALS			SERIALS
GRY/RED(3)	22	-22-B-2		SOLDER	S-1837-1		
GRY/RED(2)	22	-22-B-2		↕	↕		
GRY/RED(1)	22	-22-B-2		↕	↕		
GRY/GRN(3)	22	-22-B-5		↕	↕		
GRY/GRN(2)	22	-22-B-5		↕	↕		
GRY/GRN(1)	22	-22-B-5		SOLDER	S-1837-1		

WIRE TABLE

ITEM NO.	PART NO.	DESCRIPTION
3	0570084-1	JUNCTION BOX ASSY
2	S-1838-1	CONNECTOR
1	S-1696-1	SWITCH

EQUIPMENT TABLE

CES-1000 IS APPLICABLE
VENDOR CODES PER S-1400
CES-XXXX=CESSNA SPEC. NO.
S-XXX OR CMXXXX=CESSNA STD. NO.

SUPERSEDES: P 2.6.2

SUPERSEDED BY:

CONTRACT NO:

	NAME	DATE
DESIGN	SIPES VR	6/10/68
GROUP	[illegible]	8-15-68
DRAWN	C. GARCIA	8-3-68
CHECK	G. IRVIN	8-9-68
STRESS	T.F. GEIDE	8-12-68
PROJECT	[illegible]	8-14-68
APPD	SWANEY	8-12-68

Cessna AIRCRAFT CO.
COMMERCIAL AIRCRAFT DIV.
5800 E. PAWNEE
WICHITA, KANSAS

TITLE
WIRING DIAGRAM—
OMNI AUDIO TRANSMITTER SWITCH

SIZE	CODE IDENT. NO.	DWG NO.
C	71379	1270475

SCALE: NONE | 210-T210 | PAGE: 2.6.2.1

FORM NO. 80-215A

ED&RR 02366 (SRS403)(SRS404) IX

REVISION			
LET	DESCRIPTION	DATE	APPD
A	BY REV: PINS 3 WAS 33, 53 WAS 56, 26 WAS 23, 52 WAS 22, 33 WAS 3; TAN/RED TO S-1637-1 WAS S-1831-1 ADD NOTE 2, 3, S-1637-1, S-1637-2 & TAN(REF); S-1838-1 WAS S-1831-1 ED&RR 10155 (SR5403)(SR5404) IX	EGY 10-8-68	JWH MDS

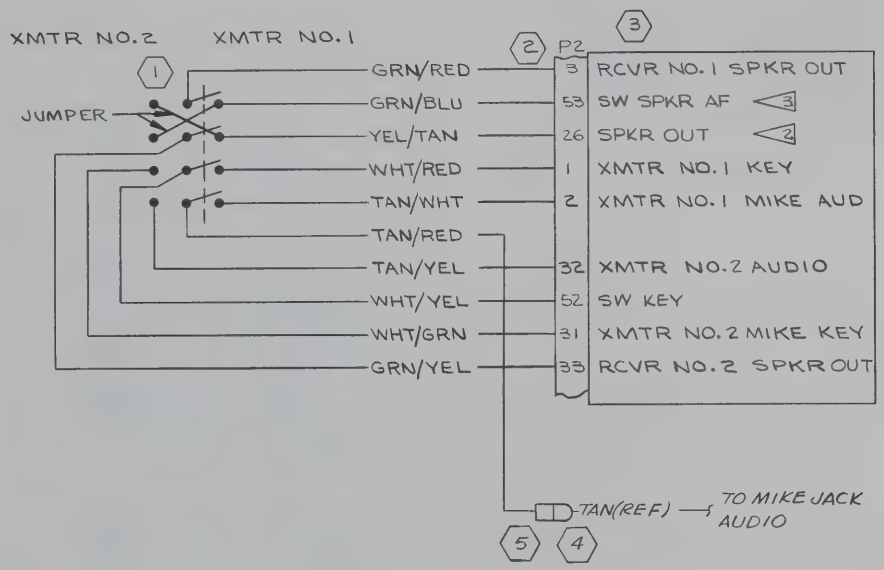

NOTES:

1. TRANSMITTER NO.1 IS ON KEYWAY SIDE
2. NO. 26 CONNECTS TO 10Ω RESISTOR ON P.C. BOARD
3. NO. 53 CONNECTS TO RELAY WIPER CONTACT THEN TO SHIP SPKR THRU NORMAL CLOSED CONTACT TO 51. WHEN RELAY IS ACTUATED BY MIC KEY CIRCUIT 53 IS CONNECTED TO 10Ω RESISTOR THRU NORMAL OPEN CONTACT.

WIRE CODE NO.	GA	MATERIAL	LG	TERMINALS			SERIALS
YEL/TAN	20	20-4-10		SOLDER	S-1837-1		
WHT/YEL	22	22-9-4					
WHT/RED	22	22-9-2					
WHT/GRN	22	22-9-5					
TAN/YEL	22	22-10-4					
TAN/WHT	22	22-10-9			S-1837-1		
TAN/RED	22	22-10-2			S-1636-1		
GRN/YEL	20	20-5-4			S-1837-1		
GRN/RED	20	20-5-2			S-1837-1		
GRN/BLU	20	20-5-6		SOLDER	S-1837-1		

WIRE TABLE

ITEM NO.	PART NO.	DESCRIPTION	PAGE
5	S-1637-2	HOUSING-PLUG	
4	S-1637-1	HOUSING - CAP	
3	0570084-1	JUNCTION BOX ASSY	7.14
2	S-1838-1	HOUSING	
1	S-1697-1	SWITCH	2.6.0

EQUIPMENT TABLE

CES-1000 IS APPLICABLE
VENDOR CODES PER S-1400
CES-XXXX=CESSNA SPEC. NO.
S-XXX OR CMXXXX=CESSNA STD. NO.

SUPERSEDES: P 2.6.3

SUPERSEDED BY:

CONTRACT NO:

	NAME	DATE
DESIGN	SIPES VR	6/10/68
GROUP	Harden	8-13-68
DRAWN	C. GARCIA	7-22-68
CHECK	G. IRVIN	8-9-68
STRESS	R.F GEIDE	8-12-68
PROJECT	[illegible]	8-14-68
APPD	SWANEY	8-12-68

Cessna AIRCRAFT CO.
COMMERCIAL AIRCRAFT DIV.
5800 E. PAWNEE
WICHITA, KANSAS

TITLE
WIRING DIAGRAM — TRANSMITTER SELECTOR SWITCH

SIZE	CODE IDENT. NO.	DWG NO.
C	71379	1270475

SCALE: NONE | 210-T210 | PAGE: 2.6.3.1

FORM NO. 80-215A

ED&RR 02366 (SR5403)(SR5404) IX

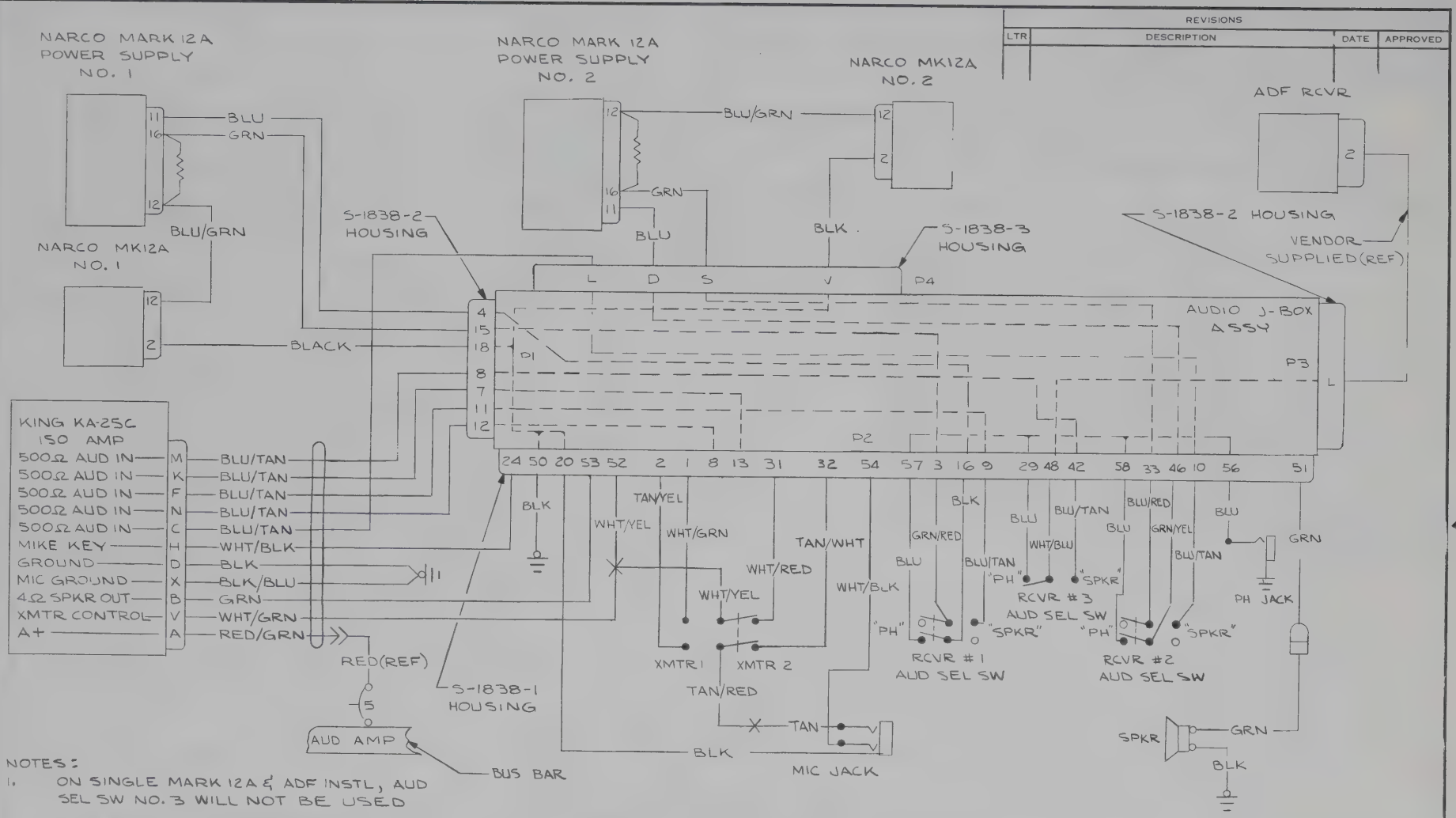

REVISIONS

LTR	DESCRIPTION	DATE	APPROVED

NOTES:

1. ON SINGLE MARK 12A & ADF INSTL, AUD SEL SW NO. 3 WILL NOT BE USED
2. THIS PAGE IS A REFERENCE PRINT ONLY
3. REFER TO 1270475 PAGE 2.35.2 FOR KING KA-25C ISOLATION AMPLIFIER WIRING DIAGRAM

CONTRACT NO:	NAME	DATE
DESIGN	HENSHAW	12-3-68
GROUP	[illegible]	12-5-68
DRAWN	HENSHAW	12-3-68
CHECK	HARRIS	12-3-68
STRESS		
PROJECT	[illegible]	[illegible]
APPD		

SUPERSEDES: P. 2.6.8

Cessna AIRCRAFT CO.
COMMERCIAL AIRCRAFT DIV.
5800 E. PAWNEE
WICHITA, KANSAS

TITLE: WIRING DIAGRAM — TYPICAL SWITCHING, NARCO MARK 12A & ADF

SIZE	CODE IDENT. NO.	DWG NO.
C	71379	1270475

SCALE: NONE | 210 & T210 | PAGE: 2.6.8.1

SER 21059062 & T210393 & ON

FORM NO. 80-216

NOTES:

1. ON SINGLE CESSNA 300 COMM INSTL, RED/BLK WIRE(PIN K) IS CONNECTED TO RED/WHT WIRE (PIN S) WITH AN S-1370-1 SPLICE, ~~BLUE WIRE (PIN C) IS CONNECTED TO BLU/TAN (PIN R) WITH S-1370-1 SPLICE.~~ WHEN 300 COMM IS INSTL WITH OTHER RADIOS, RED/WHT WIRE CONNECTS TO CKT BKR AS SHOWN, RED/BLK WIRE IS TERMINATED WITH S-1557-1 CAP; ~~BLUE WIRE CONNECTS TO WIPER OF SPKR-PHONE SW & BLU/TAN WIRE CONNECTS TO SPKR-TERM OF SPKR-PHONE SW~~
2. BLACK 16 GA WIRE IS HALVED, ½ SOLDERS TO (PIN A), ½ SOLDERS TO GND LUG
3. WHEN SINGLE XMVR IS INSTALLED PIN 12 IS JUMPED TO PIN 46 OF P2 & PIN 24 JUMPED TO PIN 1 OF P2

REVISION			
LET	DESCRIPTION	DATE	APPD
A	BY REV: ADD BLU/TAN(2),(3),(4),(5), PINS 11,9,10,12/P1, M,N,L,K/P4 & NOTE 3; BLU/TAN(1) WAS BLU/TAN; DELETE U & ADD J/12979-0018 & PART OF NOTE 1 ED & RR10155 (SR5403)(SR5404)	EGY 10-7-68	JWH MDS NLW

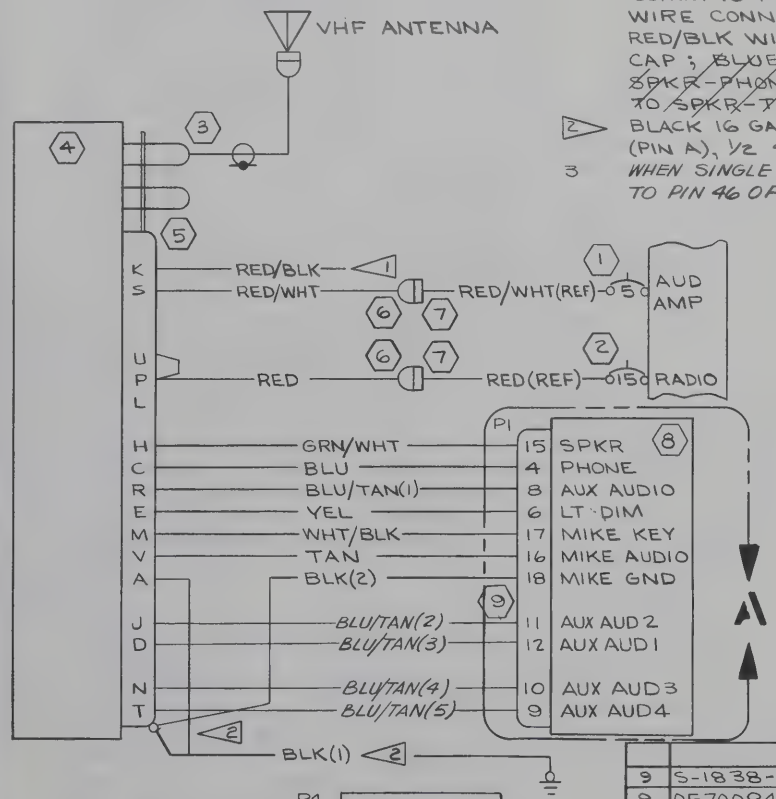

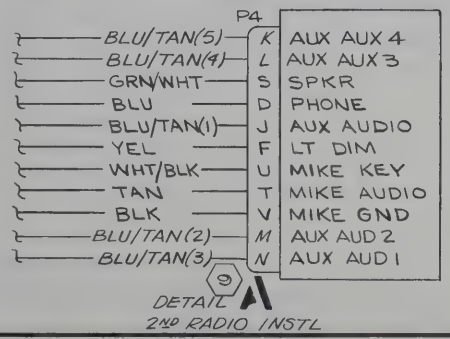

DETAIL A
2ND RADIO INSTL

9	S-1838-2	HOUSING	2.7.0
8	0570084-1	JUNCTION BOX ASSY	7.14
7	S-1637-2	HOUSING-PLUG	
6	S-1637-1	HOUSING-CAP	
5	29747-0018	CONNECTOR	2.7.0
4	31390-1514	RCVR/XMTR	3.2
3	29753	CONNECTOR	
2	S-1360-15	CIRCUIT BREAKER	3.2
1	S-1360-5	CIRCUIT BREAKER	3.2
ITEM NO.	PART NO.	DESCRIPTION	PAGE

EQUIPMENT TABLE

CES-1000 IS APPLICABLE VENDOR CODES PER S-1400
CES-XXXX=CESSNA SPEC. NO.
S-XXX OR CMXXXX=CESSNA STD. NO.

SUPERSEDES: P 2.7.2

SUPERSEDED BY:

BLU/TAN(5)	22	-22-6-10		SOLDER	S-1837-1		
BLU/TAN(4)	22	-22-6-10		↕	↕		
BLU/TAN(3)	22	-22-6-10		↕	↕		
BLU/TAN(2)	22	-22-6-10		↕	↕		
YEL	18	-18-4		SOLDER	S-1837-1		
WHT/BLK	22	-22-9-0		SOLDER	S-1837-1		
TAN	22	-22-10		SOLDER	S-1837-1		
RED/WHT	18	-18-2-9		S-1370-1	S-1367-1-6		
RED/BLK	18	-18-2-0		SOLDER	◁1		
RED	16	-16-2		↕	S-1635-1		
GRN/WHT	20	-20-5-9			S-1837-1		
BLU/TAN(1)	22	-22-6-10			S-1837-1		
BLU	22	-22-6			S-1837-1		
BLK(2)	22	-22-0		↕	S-1837-1		
BLK(1)	16	-16-0		SOLDER	S-1367-2-8		
WIRE CODE NO.	GA	MATERIAL	LG	TERMINALS			SERIALS

WIRE TABLE

CONTRACT NO:

	NAME	DATE
DESIGN	SIPES VR	6/10/68
GROUP		8-13-68
DRAWN	C.GARCIA	7-18-68
CHECK	G. IRVIN	8-9-68
STRESS	N.F. GEIDE	8-13-68
PROJECT		
APPD	SWANJEY	8-12-68

Cessna AIRCRAFT CO.
COMMERCIAL AIRCRAFT DIV.
5800 E. PAWNEE
WICHITA, KANSAS

TITLE
WIRING DIAGRAM—
CESSNA 300 COMM
(ARC TYPE 524A)

SIZE	CODE IDENT. NO.	DWG NO.
C	71379	1270475

SCALE: NONE | 210-T210 | PAGE: 2.7.2.1

FORM NO. 80-215A

ED & RR 02366 (SR5403)(SR5404)

(SR4455)

CHG LET	REVISION	BY DATE	CHK APPD
A	ADDED A-263 CHOKE IN A+ LINE & ADDED TO NOTE 2., ADDED 33827, 32680-0000 WAS 32680-0000	SKH 9-10-65	
B	BY REV: ADD DETAIL A, S-1838-3 & 0570084-1 ED & RR 02366 (SR5403) (SR5404)	CG 7-22-68	

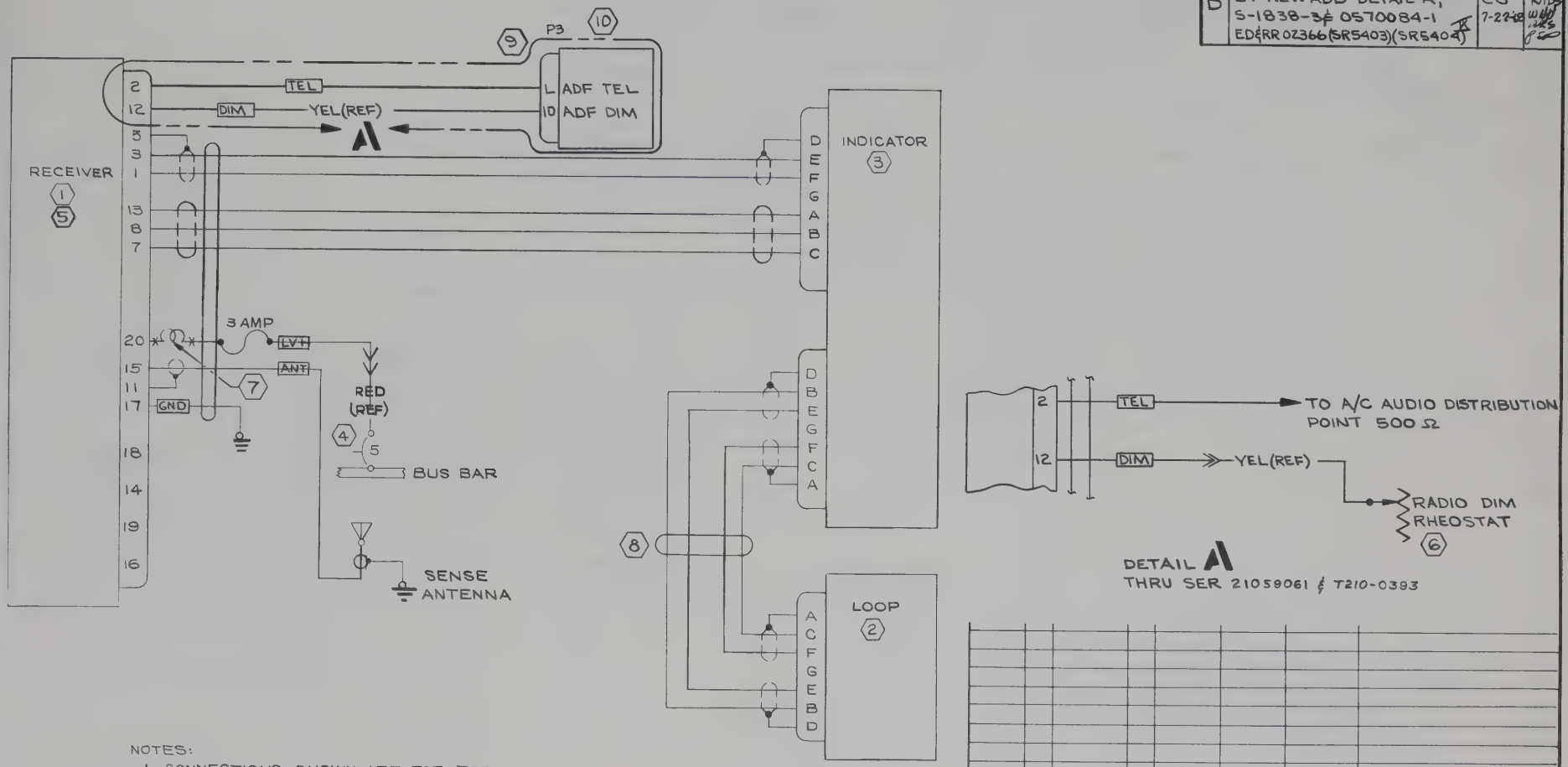

NOTES:

1. CONNECTIONS SHOWN ARE FOR TOP MOUNTED SENSE & BOTTOM MOUNTED LOOP ANTENNA.
2. ALL WIRES VENDOR FURNISHED WITH RCVR EXCEPT CHOKE BETWEEN PIN 20 & FUSEHOLDER WHICH MUST BE ADDED ON INSTL IN ACFT.

ITEM NO	PART NO.	DESCRIPTION	INSTALLED ON
10	0570084-1	JUNCTION BOX ASSY	
9	S-1838-3	CONNECTOR	
8	33827	LOOP CABLE (ARC)	
7	A-263	CHOKE (CTAT)	
6	R-12½-75-RS34	RHEOSTAT (TRTA)	
5	28340-0100	RCVR (WITH BFO)	(ARC R-521A-14)
4	S-1360-5	CIRCUIT BREAKER	
3	32680	INDICATOR (ARC)	(ARC IN-521B)
2	32880-0000	LOOP (ARC)	(ARC L-521B-10)
1	28340-0000	RCVR (WITHOUT BFO)	(ARC R-521A-15)

EQUIPMENT TABLE

WIRE CODE NO	GA	MATERIAL	LG	TERMINALS	SERIALS

WIRE TABLE

CESSNA AIRCRAFT CO. COMMERCIAL AIRCRAFT DIVISION, WICHITA, KANSAS

	NAME	DATE
DRAWN	BREEN	8-5-64
GROUP	Ted Moody	8-31-64
CHECK	R. Stuck	8-25-64
PROJ	N. Wise	8-24-64

TITLE: WIRING DIAGRAM — CESSNA ADF 300 (ARC TYPE 521B)

Cessna.

DWG NO. 1270475

SUPERSEDED BY	SUPERSEDES	PAGE	MODEL:	REV:	PAGE:
	1270405	17-8	210	B	2-12

FORM NO. 80-161

NOTES:

1. ITEMS 6,7 & 9 ARE SUPPLIED AS PART OF KING INSTL KIT NO. 050-1052-00

REVISION			
LET	DESCRIPTION	DATE	APPD

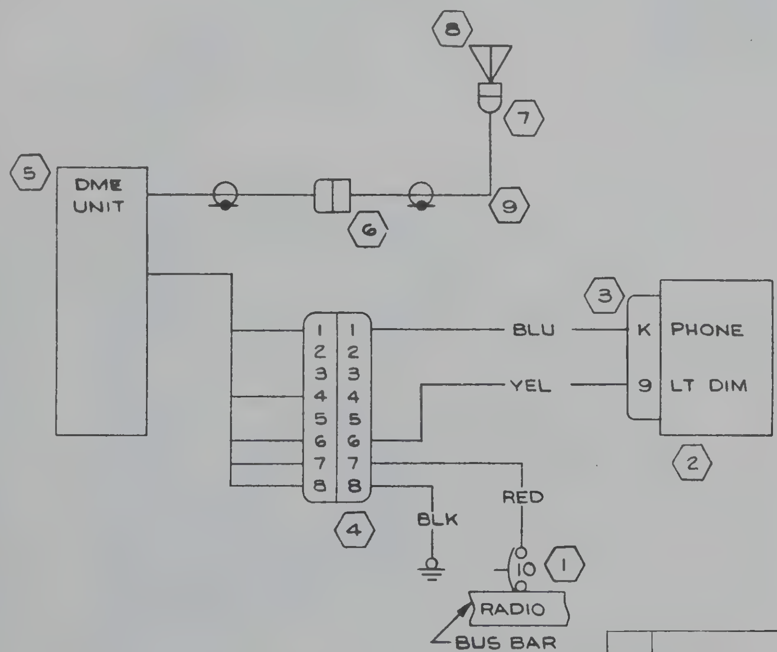

ITEM NO.	PART NO.	DESCRIPTION	VENDOR
9	030-24-00	CONN RT ANGLE	KG
8	KA-32	ANTENNA	KG
7	21-004	CONNECTOR	07497
6	030-0020-01	CONNECTOR	KG
5	C582602-0101	DME UNIT	
4	030-2043-00	CONNECTOR	KG
3	S-1838-3	CONNECTOR	
2	0570084-1	JUNCTION BOX ASSY	
1	S-1360-10	CKT BKR	

EQUIPMENT TABLE

WIRE CODE NO.	GA	MATERIAL	LG	TERMINALS		SERIALS
YEL	18	-18-4		S-1370-1	S-1837-1	
RED	16	-16-2		SOLDER	S-1370-2	
BLU	22	-22-6		SOLDER	S-1837-1	
BLK	16	-16-0		SOLDER	S-1367-2-8	

WIRE TABLE

CES-1000 IS APPLICABLE
VENDOR CODES PER S-1400
CES-XXXX=CESSNA SPEC. NO.
S-XXX OR CMXXXX=CESSNA STD. NO.

SUPERSEDES: P 2.20.1

SUPERSEDED BY:

CONTRACT NO:

	NAME	DATE
DESIGN	SIPES VR	6/10/68
GROUP	[illegible]	8-13-68
DRAWN	HARRIS	7/17/68
CHECK	G IRVIN	8-9-68
STRESS	R.F. GE. DE	[illegible]
PROJECT	[illegible]	[illegible]
APPD	SWANEY	8-12-68

Cessna AIRCRAFT CO.
COMMERCIAL AIRCRAFT DIV.
5800 E PAWNEE
WICHITA, KANSAS

TITLE
WIRING DIAGRAM — CESSNA 300 DME

SIZE C | CODE IDENT. NO. 71379 | DWG NO. 1270475

SCALE NONE | 210 & T210 | PAGE 2.20.3

FORM NO 80 218A

ED&RR 0236 ... (SR5407)(SR5404) IX

NOTES:

1. PLUGS & CAPS ARE PART OF NARCO CONN KIT EL-2052 FOR MK12 OR EL-3077-502 FOR MK 12A (NOT SUPPLIED WITH MK12 OR MK12A INSTL KIT)
2. K-41116-1 PLUG (93493) SUPPLIED WITH MK12 OR 12A. MS3106A-20-27S PLUG & MS3057-12 CLAMP ARE SUPPLIED WITH VOA-8 OR VOA-9 INDICATOR

REVISION			
LET	DESCRIPTION	DATE	APPD
A	BY REV: PIN 18/P1 WAS PIN V/P1 & P2 WAS P4 ED&RR10155 (SR5403)(SR5404) IX	EGY 10-7-68	JWH MDS RFG NMP NHW

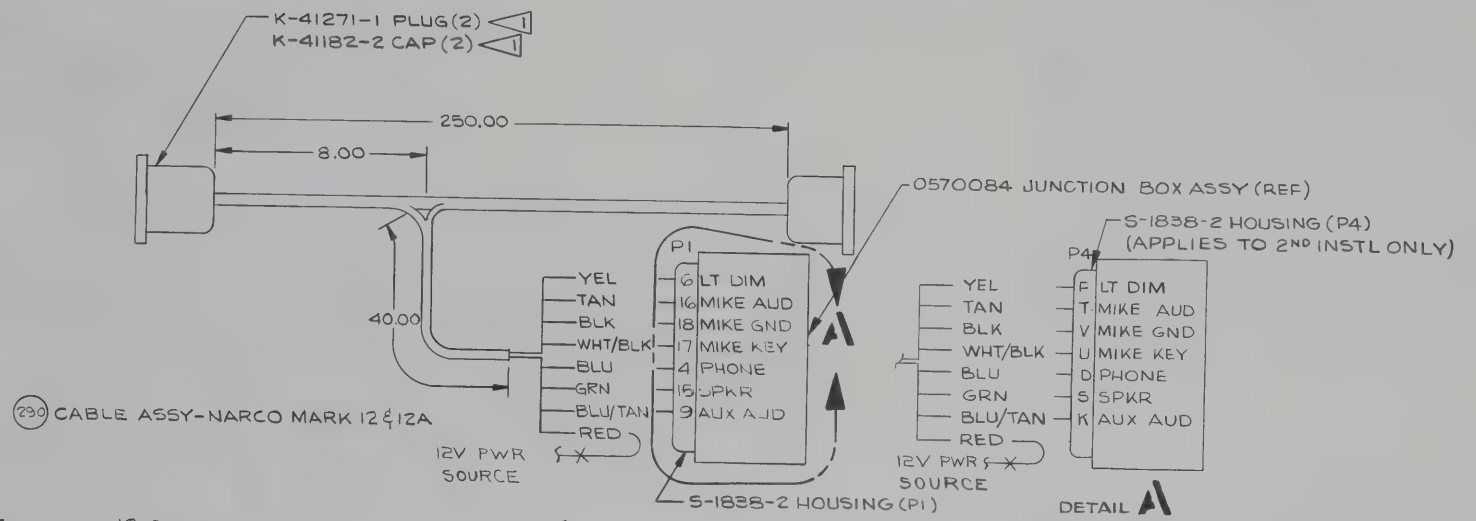

(230) CABLE ASSY-NARCO MARK 12&12A

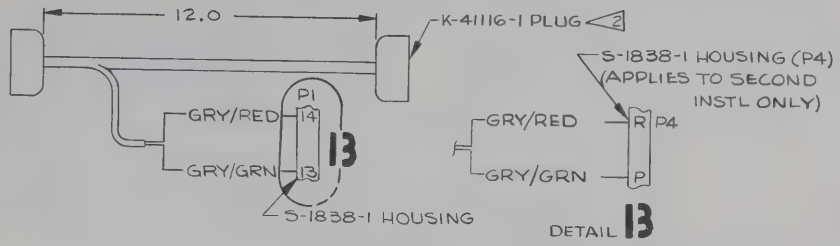

(291) CABLE ASSY-INDICATOR NARCO 12&12A

NO. REQD/NEXT ASSY	EFFECTIVE SERIALS	PAGE	PART NUMBER	DESCRIPTION
AR AR		2.25.4		WIRING
1			S-1838-1	HOUSING
1			S-1838-2	HOUSING
2			K-41271-1	PLUG
2			K-41182-2	CAP (93493)
1			K-41116-1	PLUG (93493)
1		2	MS3057-12	CLAMP
1		2	MS3106A-20-27S	PLUG
			-291	CABLE ASSY
291 290			-290	CABLE ASSY

LIST OF MATERIAL

DO NOT SCALE PRINT
BREAK ALL SHARP EDGES
A/R = AS REQD
CES-XXXX=CESSNA SPEC. NO.
S-XXX OR CMXXXX=CESSNA STD. NO.
$=APPROX EQUAL SPACES
CES-1000 IS APPLICABLE
VENDOR CODES PER S-1400

UNLESS OTHERWISE SPECIFIED
DIMENSIONS ARE IN INCHES
TOLERANCES ARE
DECIMALS: .00 ±.03, .000 ±.010 | ANGLES: MACH ±0 30' | FORMED ±2°
FOR HOLES, CSINKS, ETC., SEE CES 1012
FOR BASIC CODES SEE NAS 523
BJ-MS20470AD | BB-MS20426AD

SUPERSEDES: P. 2.25 0
SUPERSEDED BY:

CONTRACT NO:

	NAME	DATE
DESIGN	SIPES VR	6/10/68
GROUP	Harden	8-14-68
DRAWN	HARRIS	7-17-68
CHECK	G. IRVIN	8-9-68
STRESS	K.I GLIDE	8-12-68
PROJECT	[illegible]	6-14-68
APPD	SWANEY	8-12-68

Cessna AIRCRAFT CO.
COMMERCIAL AIRCRAFT DIV.
5800 E. PAWNEE
WICHITA, KANSAS

TITLE
CABLE ASSEMBLY-
NARCO MARK 12&12A

SIZE	CODE IDENT. NO.	
C	71379	1270475

SCALE: NONE | 210 & T210 | PAGE: 2.25.2

FORM NO. 80-221

ED&RR 02394 (SR5403)(SR5404) IX

REVISION			
LET	DESCRIPTION	DATE	APPD

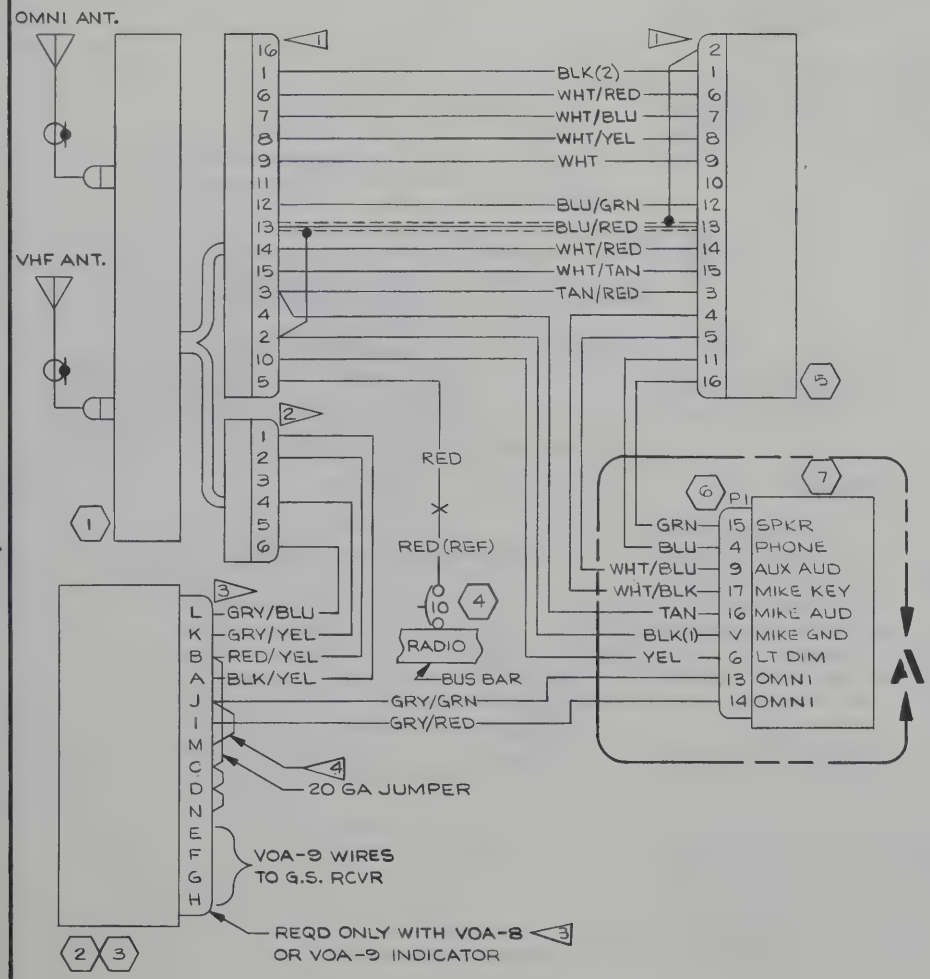

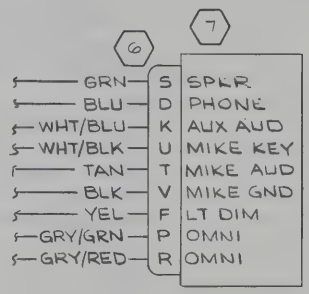

DETAIL A
2ND RADIO INSTL

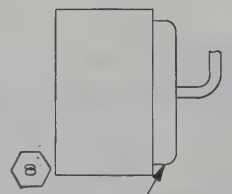

PENDANT CONN ASSY DIRECTLY TO VOA-G IND

WIRE CODE NO.	GA	MATERIAL	LG	TERMINALS		SERIALS

WIRE TABLE

ITEM NO.	PART NO.	DESCRIPTION

EQUIPMENT TABLE

CES-1000 IS APPLICABLE
VENDOR CODES PER S-1400
CES-XXXX=CESSNA SPEC. NO.
S-XXX OR CMXXXX=CESSNA STD. NO.

SUPERSEDES: P 2.25.1

SUPERSEDED BY:

CONTRACT NO:

	NAME	DATE
DESIGN	SIPES VR	6/10/68
GROUP	Darden	8-14-68
DRAWN	HARRIS	7-17-68
CHECK	G. IRVIN	8-9-68
STRESS	R L GEIDE	8-12-68
PROJECT	[illegible]	8-14-68
APPD	SWANEY	8-12-68

Cessna AIRCRAFT CO.
COMMERCIAL AIRCRAFT DIV.
5800 E. PAWNEE
WICHITA, KANSAS

TITLE
WIRING DIAGRAM — NARCO MARK 12A WITH VOA-6, VOA-8 & VOA-9

SIZE	CODE IDENT. NO.	DWG NO.
C	71379	1270475

SCALE: NONE | 210 & T210 | PAGE: 2.25.4

FORM NO. 60-218A

ED&RR 02394 (SR 5403)(SR 5404) IX

NOTES:

1. ~~THESE CKT PROVIDE A 4Ω/5WATT SPKR LOAD WHEN REQD BY THE RADIO INSTL~~
2. CONNECTOR IS FURNISHED WITH KA-25C

REVISION			
LET	DESCRIPTION	DATE	APPD
A	BY REV: DELETE GRN/RED, GRN/YEL, BLU WIRES, PINS 8, 33, 57/P2 & J, E, T, FUNCTIONS/030-2002-00; ADD P1, P2 & P3 CALLOUTS; PIN 7/P1 WAS PIN 9/P1; DELETE NOTE 1 ED & RR 10155 (SR5403)(SR5404) IX	EGY 10-7-68	JWH MDS MFG N KW MAC

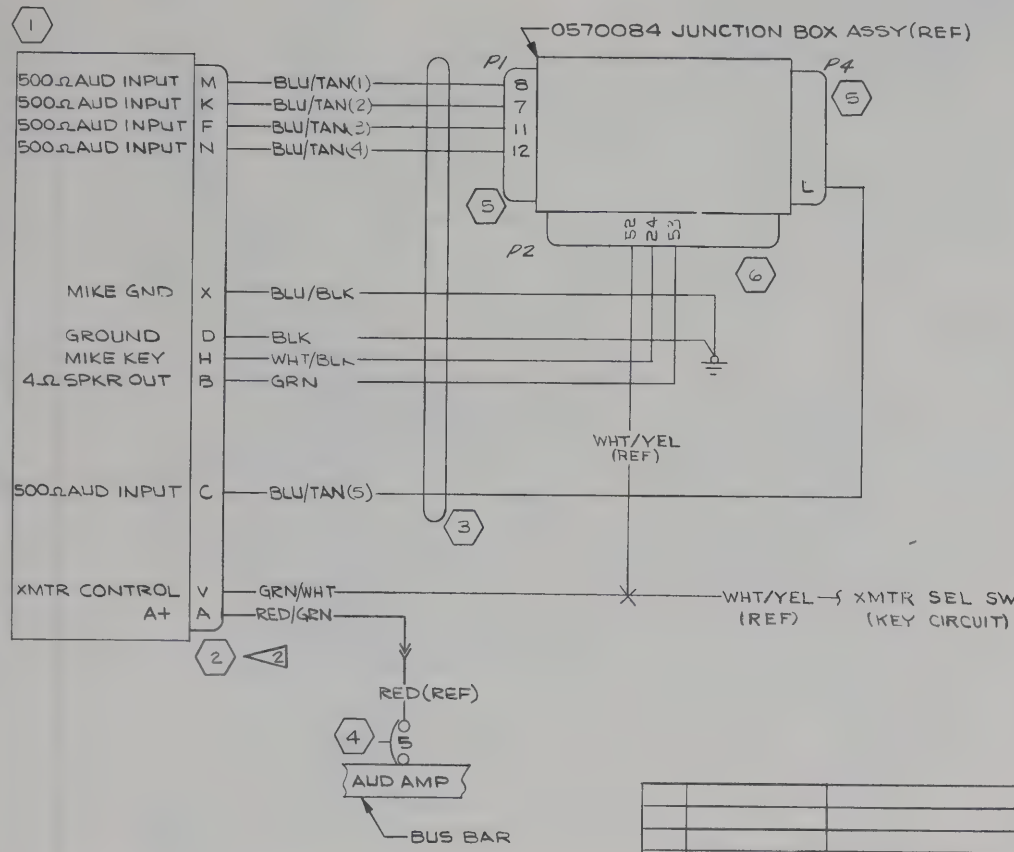

WIRE CODE NO.	GA	MATERIAL	LG	TERMINALS		SERIALS
WHT/BLK	22	22-9-0		S-1837-1	SOLDER	
RED/GRN	20	20-2-5		S-1837-1	SOLDER	
GRN/WHT	20	20-5-9		S-1370-1	SOLDER	
GRN	20	20-5		S-1837-1	SOLDER	
BLU/TAN(5)	22	22-6-10				
BLU/TAN(4)	22	22-6-10				
BLU/TAN(3)	22	22-6-10				
BLU/TAN(2)	22	22-6-10				
BLU/TAN(1)	22	22-6-10				
BLU/BLK	22	22-6-0		S-1837-1	SOLDER	
BLK	18	18-0		S-1837-1	SOLDER	

WIRE TABLE

ITEM NO.	PART NO.	DESCRIPTION	PAGE
6	S-1838-1	HOUSING	2.35.3
5	S-1838-2	HOUSING	2.35.3
4	S-1360-5	CKT BKR	7.7.1
3	-283	CABLE ASSY	2.35.3
2	030-2002-00	PLUG	2.35.3
1	KA-25C	AUD AMPLIFIER	7.7.1

EQUIPMENT TABLE

CES-1000 IS APPLICABLE
VENDOR CODES PER S-1400
CES-XXXX=CESSNA SPEC. NO.
S-XXX OR CMXXXX=CESSNA STD. NO.

SUPERSEDES: P 2.35.1

SUPERSEDED BY:

CONTRACT NO:

	NAME	DATE
DESIGN	[illegible]	8/10/68
GROUP	[illegible]	8-14-68
DRAWN	HARRIS	7-22-68
CHECK	G. IRWIN	8-9-68
STRESS	K F GEIDE	8-13-68
PROJECT	[illegible]	8-14-68
APPD	SWANEY	8-12-68

Cessna AIRCRAFT CO.
COMMERCIAL AIRCRAFT DIV.
5800 E. PAWNEE
WICHITA, KANSAS

TITLE
WIRING DIAGRAM — KING KA-25C AUDIO AMPLIFIER

SIZE	CODE IDENT. NO.	DWG NO.
C	71379	1270475

SCALE: NONE | 210 & T210 | PAGE: 2.35.2

FORM NO 80-215A

ED&RR 02394 (SR5403)(SR5404) IX

SER 210 58716 & ON
SER T210-0198 & ON

CHG LET	REVISION	BY DATE	CHK APPD
A	BY REV: IN DWG TITLE & ON FIELD VOA-9 WAS VOA-5 ED&RR00944 (SR5595)	MRL 11-21-67	

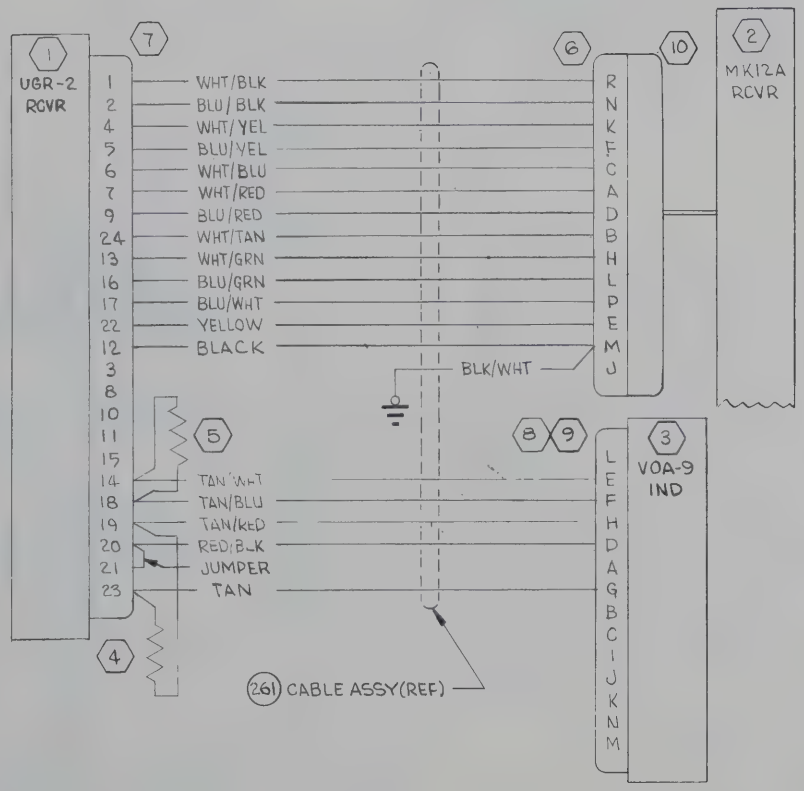

ITEM NO	PART NO	DESCRIPTION	INSTALLED ON
10	MRA-14S	PIG TAIL(93493)	
9	41228-6	CLAMP (93493)	
8	41223-2	PLUG (93493)	
7	41291-101	CONNECTOR(93493)	
6	41247-102	CONNECTOR(93493)	
5	470Ω, ½ WATT	RESISTOR(93493)	
4	1000Ω, ½ WATT	RESISTOR(93493)	
3	VOA-9	INDICATOR(93493)	
2	MARK 12A	XCVR(93493)	
1	UGR-2	RCVR(93493)	

EQUIPMENT TABLE

WIRE CODE NO.	GA	MATERIAL	LG	TERMINALS			SERIALS
BLK/WHT	18	-18-0-9		SOLDER	S-1367-1-6		
BLACK	18	-18-0			SOLDER		
YELLOW	18	-18-4					
RED/BLK	18	-18-2-0					
TAN/RED	22	-22-10-2					
TAN/BLU	22	-22-10-6					
TAN/WHT	22	-22-10-9					
BLU/WHT	22	-22-6-9					
BLU/GRN	22	-22-6-5					
BLU/RED	22	-22-6-2					
BLU/YEL	22	-22-6-4					
BLU/BLK	22	-22-6-0					
WHT/TAN	22	-22-9-10					
WHT/GRN	22	22-9-5					
WHT/RED	22	-22-9-2					
WHT/BLU	22	-22-9 6					
WHT/YEL	22	-22-9-4					
WHT/BLK	22	-22 9-0					
TAN		-22-10		SOLDER	SOLDER		

WIRE TABLE

CESSNA AIRCRAFT CO., COMMERCIAL AIRCRAFT DIVISION, WICHITA, KANSAS

	NAME	DATE
DRAWN	W COOK	11-18-67
GROUP	H. Wire	11-27-67
CHECK	SWANEY	11-18-67
PROJ	[illegible]	11-8-67

TITLE: WIRING DIAGRAM — NARCO UGR-2 GLIDESLOPE WITH NARCO MARK 12A & VOA-9

Cessna.

DWG NO 1270475

SUPERSEDED BY	SUPERSEDES 1270475, P 226.1	MODEL 210	REV. A	PAGE 2.38.1

FORM NO. 80-161

SER 210 58819 & ON
SER T210-0001 & ON

CHG LET	REVISION	BY / DATE	CHK / APPD
A	BY REV: R-543B WAS R-543A & TITLE WAS "CESSNA GLIDESLOPE (ARC TYPE R-543A) 36440-0000 WAS 34340 (ED&RR 00952)	RLY 12-7-67	MDS

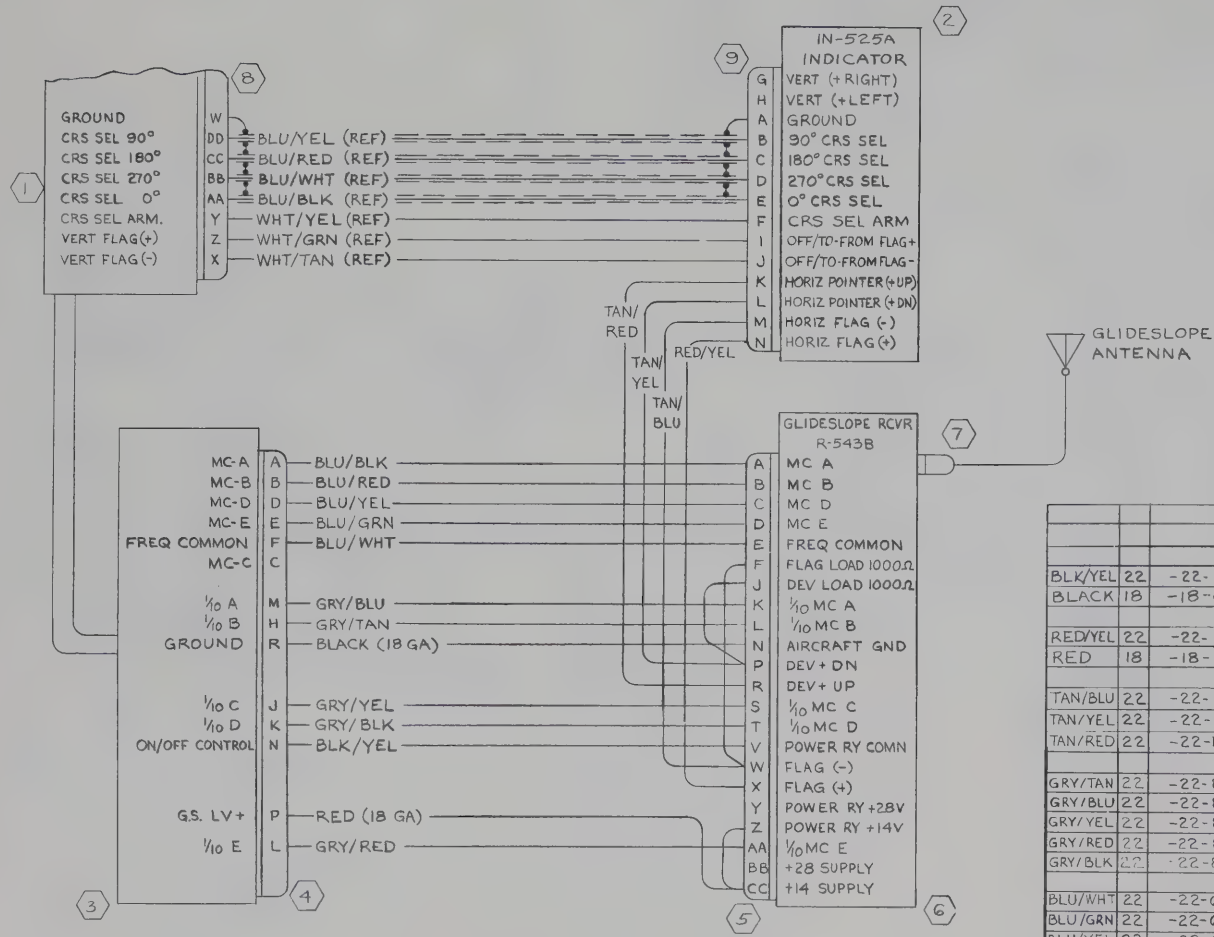

WIRE CODE NO.	GA	MATERIAL	LG	TERMINALS			SERIALS
BLK/YEL	22	-22-0-4		SOLDER	SOLDER		
BLACK	18	-18-0		SOLDER	SOLDER		
RED/YEL	22	-22-2-4		SOLDER	SOLDER		
RED	18	-18-2					
TAN/BLU	22	-22-10-6					
TAN/YEL	22	-22-10-4					
TAN/RED	22	-22-10-2					
GRY/TAN	22	-22-8-10					
GRY/BLU	22	-22-8-6					
GRY/YEL	22	-22-8-4					
GRY/RED	22	-22-8-2					
GRY/BLK	22	-22-8-0					
BLU/WHT	22	-22-6-9					
BLU/GRN	22	-22-6-5					
BLU/YEL	22	-22-6-4					
BLU/RED	22	-22-6-2					
BLU/BLK	22	-22-6-0		SOLDER	SOLDER		

WIRE TABLE

ITEM NO	PART NO.	DESCRIPTION	INSTALLED ON
9	27826	CONNECTOR	
8	29747-0026	CONNECTOR	
7	11337	CONNECTOR	
6	36440-0000	GLIDESLOPE RCVR	(ARC TYPE R-543B)
5	36194	CONNECTOR KIT	
4	36195	CONNECTOR KIT	
3	36300	CABLE HARNESS KIT	
2	32350	INDICATOR (ARC TYPE IN-525A)	
1	36150-1114	RCVR-XMTR (ARC TYPE RT515R-1)	

EQUIPMENT TABLE

CESSNA AIRCRAFT CO., COMMERCIAL AIRCRAFT DIVISION, WICHITA, KANSAS

	NAME	DATE
DRAWN	G WOOD	11-10-66
GROUP	H Wise	1-31-67
CHECK	YAKSHAW	2-1-67
PROJ	[illegible]	2-3-[illegible]

TITLE: WIRING DIAGRAM— CESSNA 400 GLIDESLOPE (ARC TYPE R-543B)

Cessna®

DWG NO: 1270475

SUPERSEDED BY: | SUPERSEDES: | MODEL: 210, T210 | REV: A | PAGE: 2.43.1

FORM NO 80 16.A

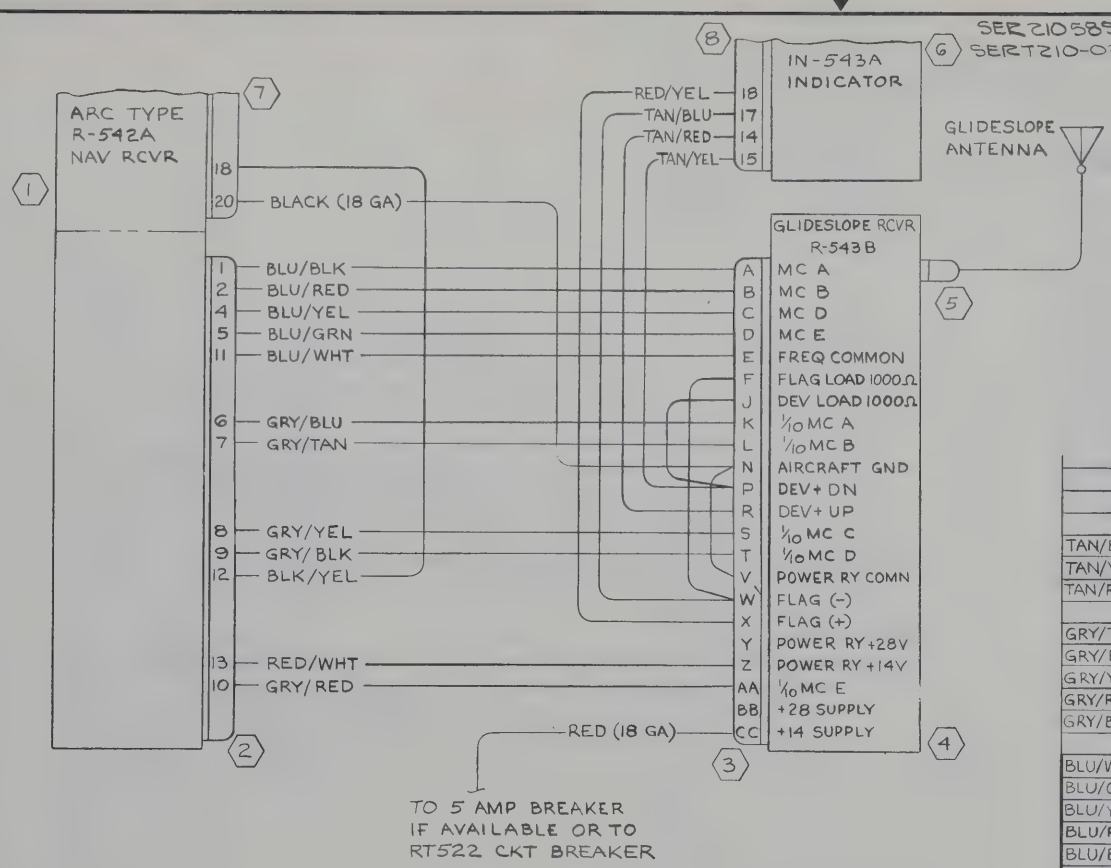

REVISIONS			
LTR	DESCRIPTION	DATE	APPROVED
A	BY REV: R-543B WAS R-543A & TITLE WAS "CESSNA GLIDESLOPE" (ARC TYPE R-543A); 36440-0000 WAS 34340 (ED&RR 00952) (SR5632)	RLY 12-7-67	MDS N/A N/W

WIRE CODE NO.	GA	MATERIAL	LG	TERMINALS		SERIALS
TAN/BLU	22	-22-10-6		SOLDER	SOLDER	
TAN/YEL	22	-22-10-4		SOLDER	SOLDER	
TAN/RED	22	-22-10-2		SOLDER	SOLDER	
GRY/TAN	22	-22-8-10		SOLDER	SOLDER	
GRY/BLU	22	-22-8-6		↕	↕	
GRY/YEL	22	-22-8-4		↕	↕	
GRY/RED	22	-22-8-2		↕	↕	
GRY/BLK	22	-22-8-0		SOLDER	SOLDER	
BLU/WHT	22	-22-6-9		SOLDER	SOLDER	
BLU/GRN	22	-22-6-5		↕	↕	
BLU/YEL	22	-22-6-4		↕	↕	
BLU/RED	22	-22-6-2		↕	↕	
BLU/BLK	22	-22-6-0		↕	↕	
RED/YEL	22	-22-2-4		↕	↕	
RED/WHT		-22-2-9		SOLDER	↕	
RED	18	-18-2		S-1367-1-8	SOLDER	
BLK/YEL	22	-22-0-4		SOLDER	SOLDER	
BLACK	18	-18-0		SOLDER	SOLDER	

WIRE TABLE

ITEM NO.	PART NO.	DESCRIPTION
8	34294-0425	CONNECTOR
7	35693-0004	CONNECTOR
6	34290	INDICATOR (ARC TYPE IN-543)
5	11337	CONNECTOR
4	36440-0000	G/S RCVR (ARC TYPE R-543B)
3	36194	CONNECTOR KIT (00781)
2	35548-0225	CONNECTOR (00781)
1	33560	NAV RCVR (ARC TYPE R-542)

EQUIPMENT TABLE

CONTRACT NO:

	NAME	DATE
DESIGN	G WOOD	1-9-67
GROUP	A. Wire	1-31-67
DRAWN	G WOOD	1-9-67
CHECK	YAKSHAW	2-1-67
STRESS	ASHER	2-2-67
PROJECT	McCarter	2-3-67
APPD		

Cessna AIRCRAFT CO.
COMMERCIAL AIRCRAFT DIV.
5800 E. PAWNEE
WICHITA, KANSAS

TITLE
WIRING DIAGRAM —
CESSNA 400
GLIDESLOPE
(ARC TYPE R-543B)

SIZE	CODE IDENT. NO.	DWG NO.
C	71379	1270475

SCALE: NONE

PAGE: 2.44.1

FORM NO. 80-215

REVISION			
LET	DESCRIPTION	DATE	APPD
A	REFER TO PAGE 2.45.3.0		

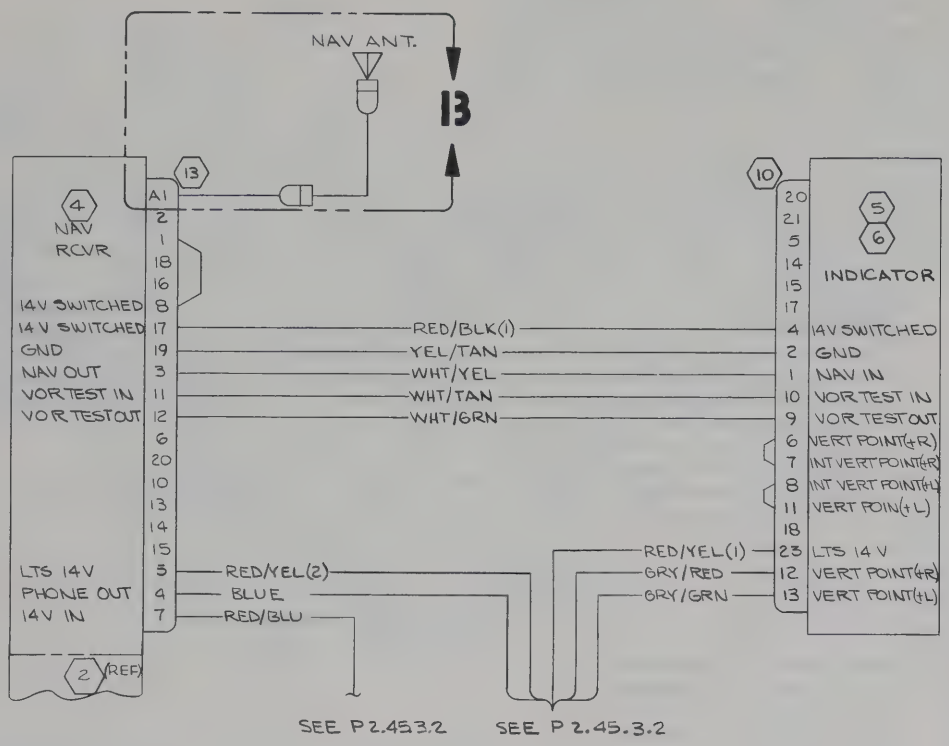

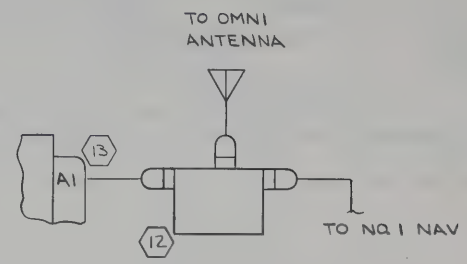

DETAIL 13
2ND INSTL

WIRE CODE NO.	GA	MATERIAL	LG	TERMINALS		SERIALS

WIRE TABLE

ITEM NO.	PART NO.	DESCRIPTION

EQUIPMENT TABLE

CES-1000 IS APPLICABLE
VENDOR CODES PER S-1400
CES-XXXX=CESSNA SPEC. NO.
S-XXX OR CMXXXX=CESSNA
STD. NO.

SUPERSEDES: P 2.45.2.1

SUPERSEDED BY:

CONTRACT NO:

	NAME	DATE
DESIGN	SIPES V R	6/10/68
GROUP	Hardin	8-13-68
DRAWN	HARRIS	7/11/68
CHECK	G. IRVIN	8-9-68
STRESS	K F GEIDE	8-13-68
PROJECT	[illegible]	9-19-68
APPD	SWANEY	8-12-68

Cessna AIRCRAFT CO.
COMMERCIAL AIRCRAFT DIV.
5800 E. PAWNEE
WICHITA, KANSAS

TITLE
WIRING DIAGRAM —
CESSNA 400 NAV/COM
(ARC TYPE RT 522A & RT 532A)

SIZE	CODE IDENT. NO.	DWG NO.
C	71379	1270475

SCALE: NONE | 210&T210 | PAGE: 2.45.3.1

FORM NO. 80-215A

ED&RR 02366 (SR5403)(SR5404) IX

REVISION			
LET	DESCRIPTION	DATE	APPD
A	REFER TO PAGE 2.45.3.0		

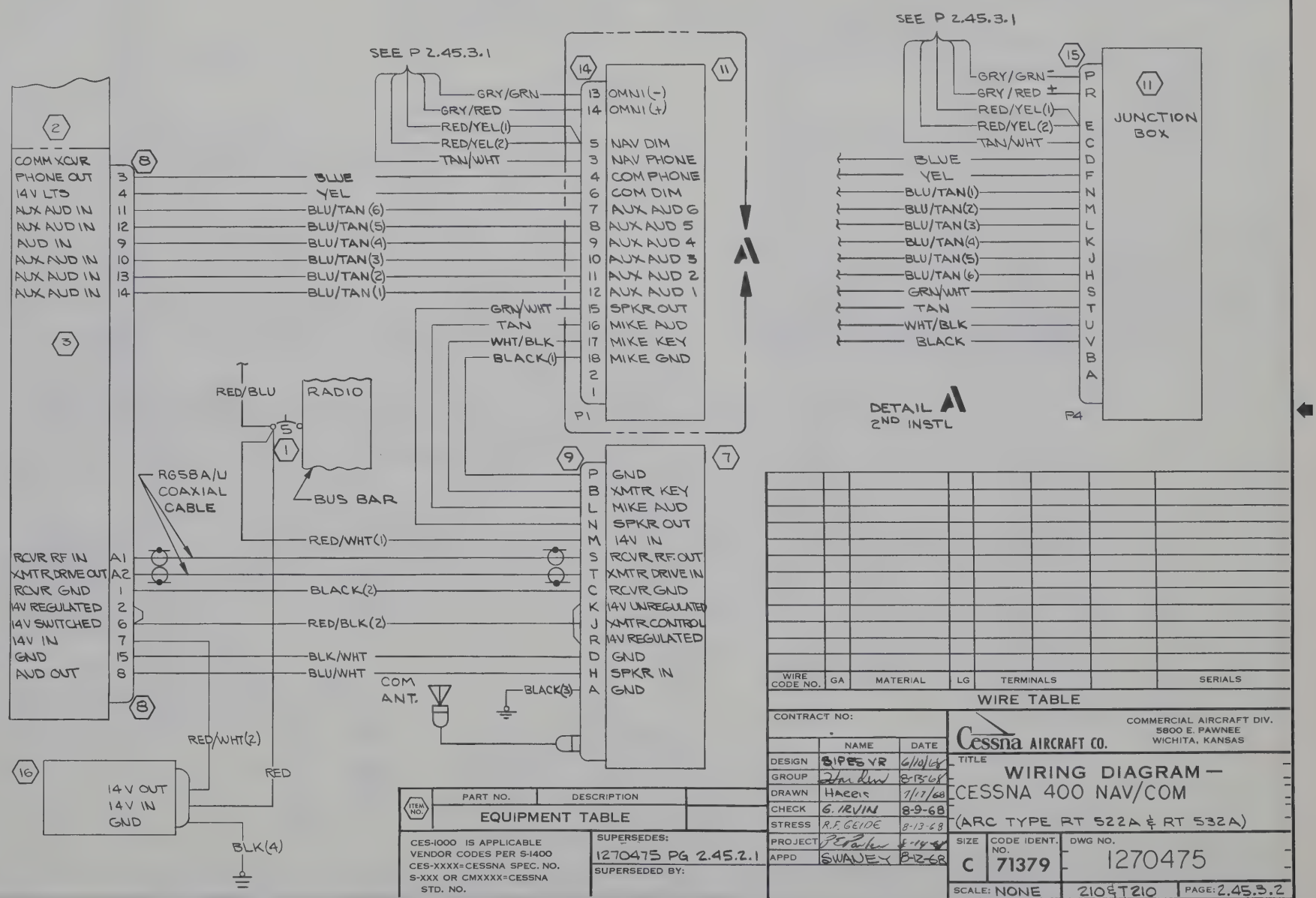

WIRE CODE NO.	GA	MATERIAL	LG	TERMINALS		SERIALS

WIRE TABLE

ITEM NO.	PART NO.	DESCRIPTION
		EQUIPMENT TABLE

CES-1000 IS APPLICABLE VENDOR CODES PER S-1400
CES-XXXX=CESSNA SPEC. NO.
S-XXX OR CMXXXX=CESSNA STD. NO.

SUPERSEDES: 1270475 PG 2.45.2.1
SUPERSEDED BY:

CONTRACT NO:

	NAME	DATE
DESIGN	SIPES VR	6/10/68
GROUP	[illegible]	8-13-68
DRAWN	Harris	7/17/68
CHECK	G. IRVIN	8-9-68
STRESS	R.F. GEIDE	8-13-68
PROJECT	[illegible]	8-14-68
APPD	SWANEY	8-12-68

Cessna AIRCRAFT CO.
COMMERCIAL AIRCRAFT DIV.
5800 E. PAWNEE
WICHITA, KANSAS

TITLE
WIRING DIAGRAM —
CESSNA 400 NAV/COM
(ARC TYPE RT 522A & RT 532A)

SIZE	CODE IDENT. NO.	DWG NO.
C	71379	1270475

SCALE: NONE | 210&T210 | PAGE: 2.45.3.2

FORM NO. 80-215A

ED&RR 02366 (SR5403) & (SR5404) H

REVISION			
LET	DESCRIPTION	DATE	APPD
A	BY REV: ADD NOTE 5 & SR'S, PAGE 2.47 WAS 2.47.0. (SR5160) & (SR5161) IX	JWH 8-30-67	YAK
B	BY REV: 305-4304 WAS 26006 ED & RR 01336	RLL 11-20-67	
C	BY REV: ADD NOTE 6 ED & RR 01851	RLY 1-24-68	RLL
D	BY REV: ADD DETAIL A; DELETE NOTE 6 ED & RR 10214 SER'S 21059062 & T210-0393 & ON	EGY 10-23-68	JWH

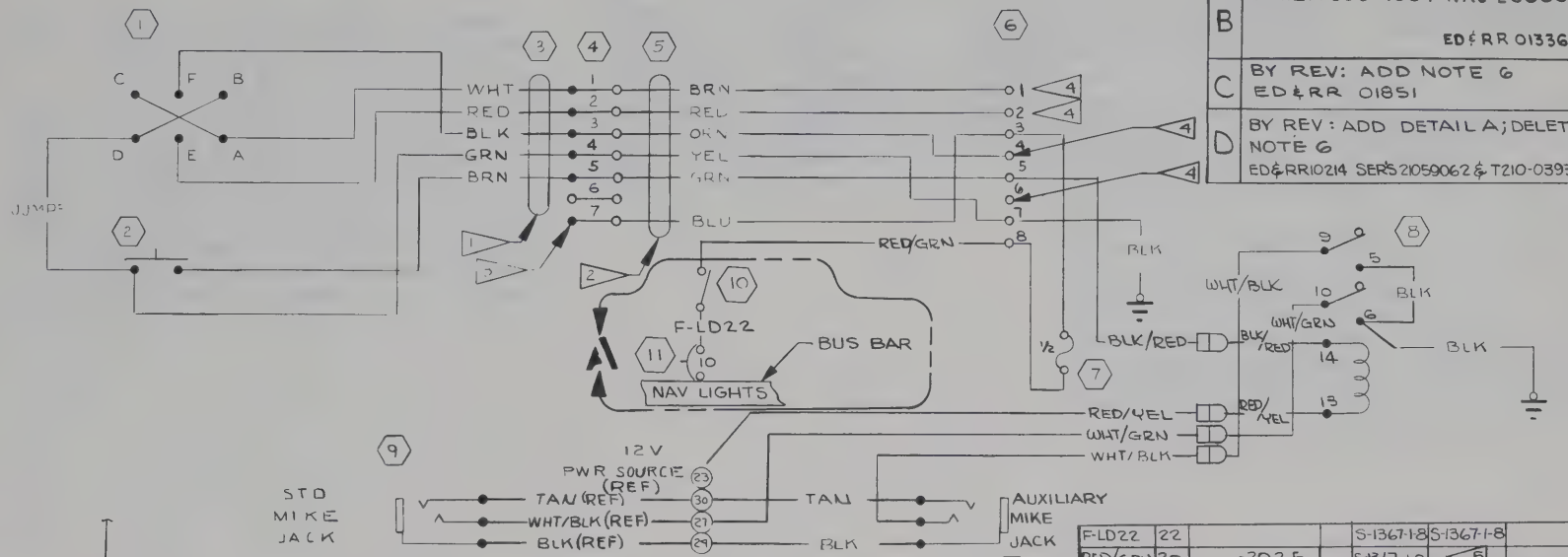

DETAIL A
THRU SER 21059061
& SER T210-0392

NOTES:

1. BOTH ENDS OF (3) WIRES TO BE SOLDERED
2. BOTH ENDS OF (5) WIRES TO BE TERMINATED WITH 320733 TERMINALS (00779)
3. POWER SOURCE FOR MAP LIGHT REFER TO 1270405 PAGE 11.10 FOR SCHEMATIC OF ETCHED CIRCUIT BOARD.
4. REFER TO 1270405 PAGE 14.6 FOR PITCH TRIM MOTOR WIRING DIAGRAM.
5. PART NO. IS 329636, VENDOR CODE IS 00779.
6. ~~WHEN AUDIO TERMINAL BOARD IS NOT INSTALLED, CONNECT RED/GREEN WIRE TO NAV LTS CIRCUIT BREAKER FOR MAP LT POWER~~

ITEM NO.	PART NO.	DESCRIPTION	VENDORS
11	S-1360-10	CKT BKR	
10	S-1845-1-1	SWITCH	
9	S 1102-1	JACK	
8	S-1813-2	RELAY	
7	1570141-1	FUSE ASSY	
6	8-171	TERM BLOCK	(71785)
5	SF-1030-BX	CABLE	(08261)
4	1570142-2	CIRCUIT BOARD ASSY	
3	8445	CABLE	(70903)
2	33-1	SWITCH	(81073)
1	305-4304	SWITCH	(81579)

EQUIPMENT TABLE

WIRE CODE NO.	GA	MATERIAL	LG	TERMINALS			SERIALS
F-LD22	22			S-1367-1-8	S-1367-1-8		
RED/GRN	20	-20-2-5		S-1367-1-8	5		
TAN	22	-22-10		SOLDER	S-1367-1-8		
BLK	22	-22-0		SOLDER	S-1367-1-8		
WHT/GRN	22	-22-9-5		S-1636-1 S-1637-2	S-1367-1-8		
WHT/GRN	22	-22-9-5		SOLDER	S-1635-1 S-1637-1		
BLK/RED	22	-22-0-2		SOLDER	S-1635-1 S-1637-1		
BLK/RED	22	-22-0-2		5	S-1636-1 S-1637-2		
RED/YEL	22	-22-2-4		SOLDER	S-1635-1 S-1637-1		
RED/YEL	22	-22-2-4		S-1367-1-8	S-1636-1 S-1637-2		
WHT/BLK	22	-22-9-0		SOLDER	S-1635-1 S-1637-1		
WHT/BLK	22	-22-9-0		S-1636-1 S-1637-2	S1367-1-8		
BLK	22	-22-0		5	S-1367-1-8		
BLK	22	-22-0		SOLDER	SOLDER		
BLK	22	-22-0		SOLDER	S-1367-1-8		

WIRE TABLE

CES-1000 IS APPLICABLE
VENDOR CODES PER S-1400
CES-XXXX=CESSNA SPEC. NO.
S-XXX OR CMXXXX=CESSNA STD. NO.

SUPERSEDES: 1270475 PG 2.28

SUPERSEDED BY:

CONTRACT NO:

	NAME	DATE
DESIGN	H. WISE	7-26-67
GROUP	H. Wise	7-26-67
DRAWN	[illegible]	[illegible]
CHECK	YAKSHAW	8-30-67
STRESS		8-31-67
PROJECT	McCarter	8-4-67
APPD		

Cessna AIRCRAFT CO.
COMMERCIAL AIRCRAFT DIV.
5800 E. PAWNEE
WICHITA, KANSAS

TITLE
WIRING DIAGRAM — PITCH TRIM, MIKE & MAP LIGHT CONTROL WHEEL

SIZE	CODE IDENT. NO.	DWG NO.
C	71379	1270475

SCALE: NONE | 210 & T210 | PAGE: 2.47

SER 21058937 & ON & SER T210-0308

FORM NO. 80-215A

REVISION			
LET	DESCRIPTION	DATE	APPD
A	BY REV: ADD SR'S; PAGE 2.48 WAS 2.47.1. (SR5160) & (SR5161) IX	JWH 8/30/67	YAK
B	BY REV: ADD NOTE 6 ED & RR 00184	JRC 9-25-67	RRS
C	BY REV: 305-4304 WAS 26006 ED & RR 01336	RLL 11-20-67	

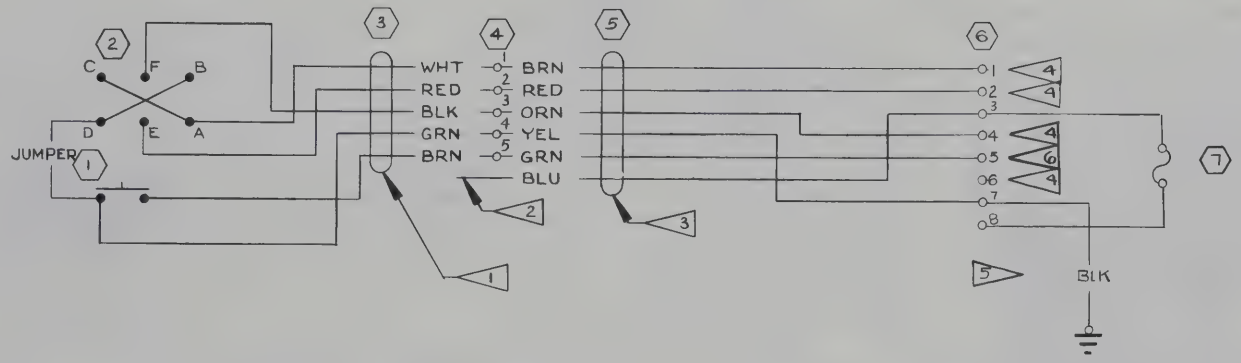

NOTES:

1. SWITCH END OF (3) WIRES TO BE SOLDERED. TERM BLOCK END TO BE TERMINATED WITH 320733 TERMINALS (00779)
2. USED ONLY WITH MAP LITE
3. BOTH ENDS OF (5) WIRES TO BE TERMINATED WITH 320733 TERMINALS (00779)
4. REFER TO 1270405 PAGE 14.6 FOR PITCH TRIM MOTOR WIRING DIAGRAM.
5. ALL WIRE SHOWN ON THIS PAGE ARE ALSO SHOWN ON PAGE 2.47.0 REFER TO 2.47.0 FOR WIRE TERMINATION DETAILS.
6. A MIKE KEYING RELAY IS REQUIRED WITH 39-1 SWITCH. REFER TO PAGE 2.47 FOR RELAY & ADDITIONAL CIRCUIT.

ITEM NO.	PART NO.	DESCRIPTION	VENDOR
7	1570141-1	FUSE ASSY	
6	8-171	TERM BLOCK	(71785)
5	SF-1030-BX	CABLE	(08261)
4	5-171	TERM BLOCK	(71785)
3	8445	CABLE	(70903)
2	305-4304	SWITCH	(81579)
1	39-1	SWITCH	(81073)

EQUIPMENT TABLE

CES-1000 IS APPLICABLE
VENDOR CODES PER S-1400
CES-XXXX=CESSNA SPEC. NO.
S-XXX OR CMXXXX=CESSNA STD. NO.

SUPERSEDES: 1270475, PG 2.28

SUPERSEDED BY:

WIRE CODE NO.	GA	MATERIAL	LG	TERMINALS		SERIALS

WIRE TABLE

CONTRACT NO:

	NAME	DATE
DESIGN	ACKERSON	6-8-67
GROUP	H. Wise	7-29-67
DRAWN	J WEDEL	7-26-67
CHECK	YAKSHAW	8-30-67
STRESS		8-31-67
PROJECT	McCarter	8-4-67
APPD		

Cessna AIRCRAFT CO.
COMMERCIAL AIRCRAFT DIV.
5800 E. PAWNEE
WICHITA, KANSAS

TITLE
WIRING DIAGRAM — PITCH TRIM & MIKE SWITCH CONTROL WHEEL

SIZE	CODE IDENT. NO.	DWG NO.
C	71379	1270475

SCALE: NONE | 210 & T210 | PAGE: 2.48

SER 21058937 & ON & SER T210-0308

FORM NO. 80-215A

K

REVISION			
LET	DESCRIPTION	DATE	APPD
A	BY REV: ADD SR'S ; PAGE 2.49 WAS 2.47.2 (SR5160) & (SR5161) IV	JWH 8-30-67	YAK
B	BY REV: 305-4304 WAS 26006 ED & RR 01336	RLL 11-20-67	

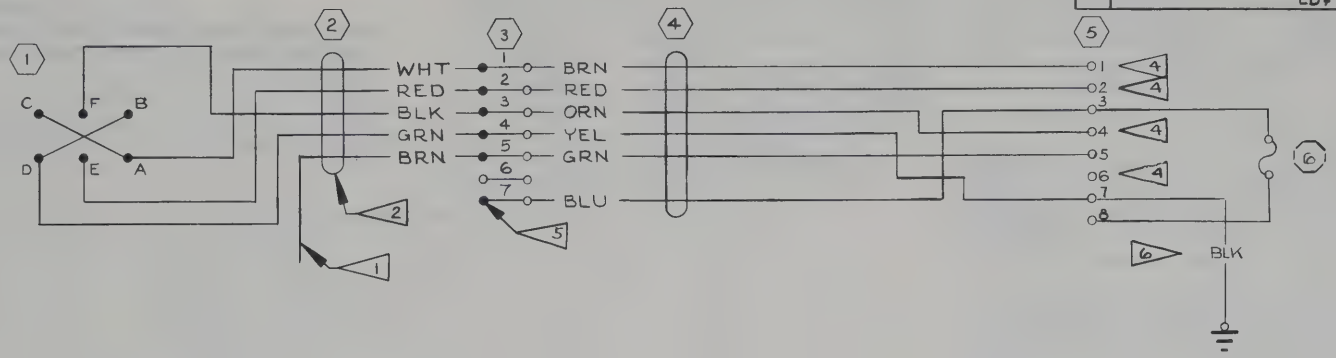

NOTES:

1. USED ONLY WITH MIKE SWITCH
2. BOTH ENDS OF (2) WIRES TO BE SOLDERED
3. BOTH ENDS OF (4) WIRES TO BE TERMINATED WITH 320733 TERMINALS (00779)
4. REFER TO 1270405 PAGE 14.6 FOR PITCH TRIM MOTOR WIRING DIAGRAM.
5. POWER SOURCE FOR MAP LIGHT REFER TO 1270405 PAGE 11.10 FOR SCHEMATIC OF ETCHED CIRCUIT BOARD.
6. ALL WIRES SHOWN ON THIS PAGE ARE ALSO SHOWN ON PAGE 2.42.0 REFER TO 2.24.0 FOR WIRE TERMINATION DETAILS.

ITEM NO.	PART NO.	DESCRIPTION	VENDOR
6	1570141-1	FUSE ASSY	
5	8-171	TERM BLOCK	(71785)
4	SF-1030-BX	CABLE	(08261)
3	1570142-2	CIRCUIT BOARD ASSY	
2	8445	CABLE	(70903)
1	305-4304	SWITCH	(81579)

EQUIPMENT TABLE

CES-1000 IS APPLICABLE
VENDOR CODES PER S-1400
CES-XXXX=CESSNA SPEC. NO.
S-XXX OR CMXXXX=CESSNA STD. NO.

SUPERSEDES:

SUPERSEDED BY:

WIRE CODE NO.	GA	MATERIAL	LG	TERMINALS			SERIALS

WIRE TABLE

CONTRACT NO:

	NAME	DATE
DESIGN	ACKERSON	6-8-67
GROUP	H. Wise	7-26-67
DRAWN	ACKERSON	6-8-67
CHECK	YAKSHAW	8-3-67
STRESS	aus	8-31-67
PROJECT	McCarter	8-4-67
APPD		

Cessna AIRCRAFT CO.
COMMERCIAL AIRCRAFT DIV.
5800 E. PAWNEE
WICHITA, KANSAS

TITLE
WIRING DIAGRAM — PITCH TRIM & MAP LIGHT CONTROL WHEEL

SIZE	CODE IDENT. NO.	DWG NO.
C	71379	1270475

SCALE: NONE | 210 & T210 | PAGE: 2.49

SER 21058937 & ON & SER T210-0308 & ON

FORM NO. 80-215A

210

REVISION			
LET	DESCRIPTION	DATE	APPD
A	BY REV: ADD NOTE 3 & SR ; REVISE NOTE 2 ; PAGE 2.50 WAS 2.47.3. (SR5160) & (SR5161) II	JWH 8-30-67	YAK NONE
B	BY REV: WHT/BLK WAS GRN WHT/RED WAS WHT/BLK EO & RR 00184	DAC 9-25-67	RRS YAK PER

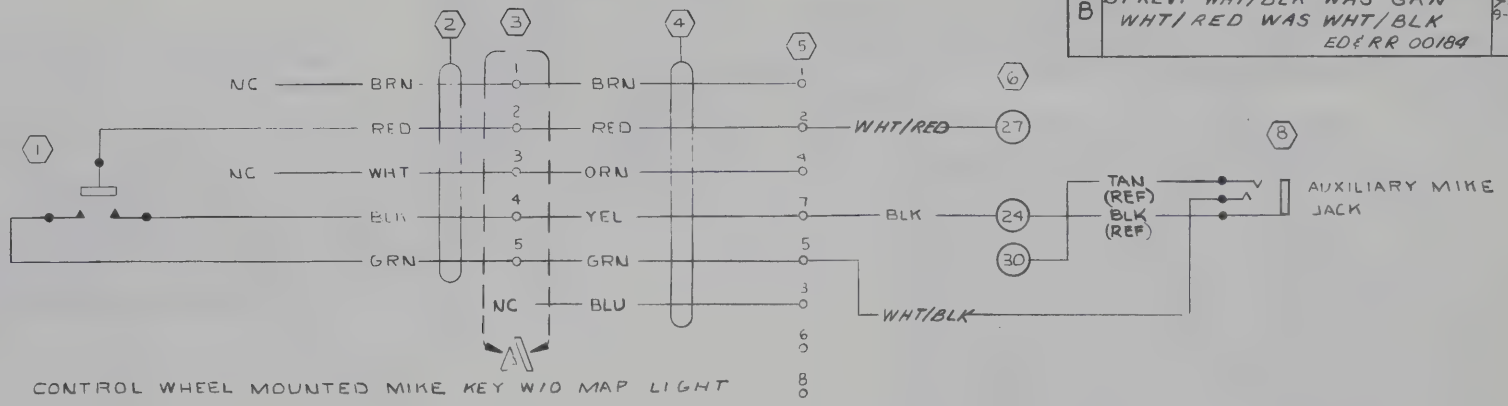

CONTROL WHEEL MOUNTED MIKE KEY W/O MAP LIGHT

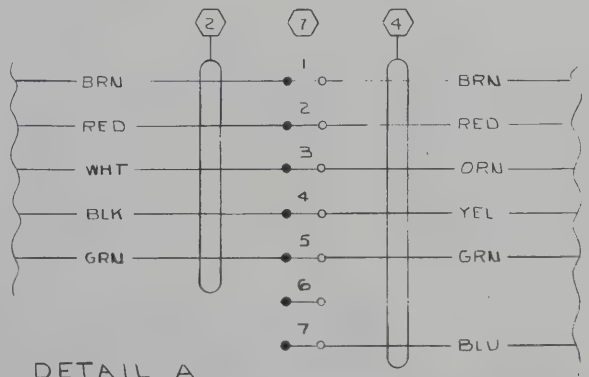

DETAIL A

CONTROL WHEEL MOUNTED MIKE KEY WITH MAP LIGHT

NOTE:

1. REFER TO 1270475 PAGE 2.47.0 WHEN MIKE KEYING SWITCH IS COMBINED WITH AN AUTOMATIC PITCH TRIM SYSTEM
2. S-171 TERMINAL BLOCK IS REPLACED BY 1570142-2 CIRCUIT BOARD WHEN MAP LIGHT IS INSTALLED.
3. PART NO. IS 329636, VENDOR CODE IS 00779.

ITEM NO.	PART NO.	DESCRIPTION	VENDORS
8	S-1102-1	JACK	
7	1570142-2	CIRCUIT BOARD ASSY	
6	0770714-1	TERM BLOCK ASSY	
5	B-171	TERM BLOCK	(71785)
4	SF-1030-BX	CABLE	(08261)
3	S-171	TERM BLOCK	(71785)
2	8445	CABLE	(70903)
1	A8002	SWITCH	HETH

EQUIPMENT TABLE

CES-1000 IS APPLICABLE VENDOR CODES PER S-1400
CES-XXXX=CESSNA SPEC. NO.
S-XXX OR CMXXXX=CESSNA STD. NO.

SUPERSEDES: 1270475, PG 2.28

SUPERSEDED BY:

WIRE CODE NO.	GA	MATERIAL	LG	TERMINALS		SERIALS
WHT/RED	22	-22-9-2		S-1367-1-8	<3	
WHT/BLK	22	-22-9-0		<3	SOLDER	
BLK	22	-22-0		S-1367-1-8	<3	

WIRE TABLE

	NAME	DATE
DESIGN		
GROUP	W Winn	7-31-67
DRAWN	J WEDEL	7-31-67
CHECK	YAKSHAW	8-30-67
STRESS		8-31-67
PROJECT	Mc Carter	8-9-67
APPD		

CONTRACT NO:

Cessna AIRCRAFT CO.
COMMERCIAL AIRCRAFT DIV.
5800 E. PAWNEE
WICHITA, KANSAS

TITLE
WIRING DIAGRAM — MIKE KEY, CONTROL WHEEL MOUNTED

SIZE	CODE IDENT. NO.	DWG NO.
C	71379	1270475

SCALE: NONE | 210 & T210 | PAGE: 2.50

SER 21056937 & ON & SER T210-0306

FORM NO. 80-215A

SER 210 58937 & ON
SER T210-0308 & ON

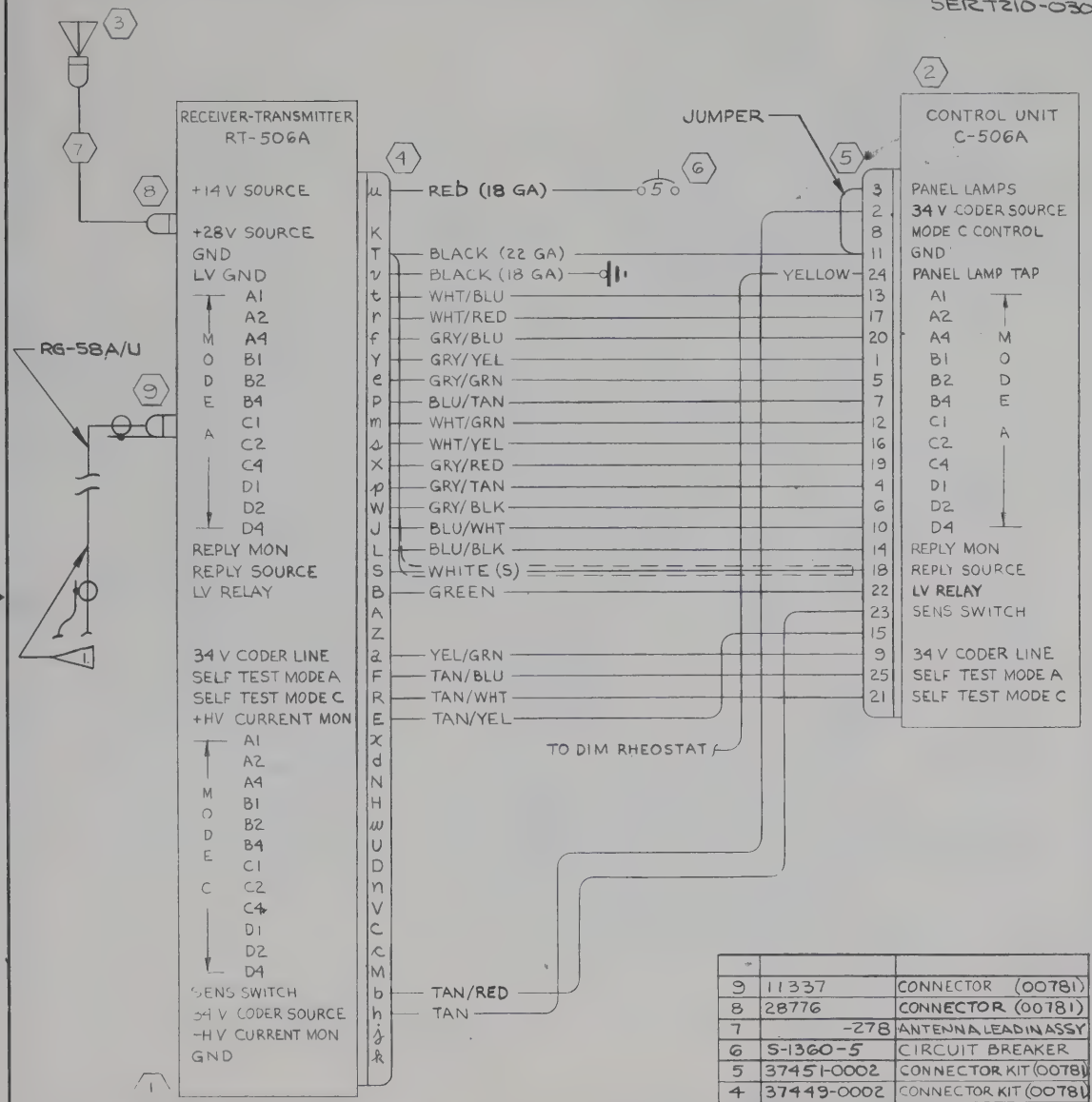

1. SUPRESSOR CABLE ROUTES WITH CABLE TO CONTROL PANEL. CENTER CONDUCTOR CONNECTS TO PIN 4 OF 300 DME CABLE & SHIELD CONNECTS TO PIN 8. CENTER CONDUCTOR TERMINATED WITH END CAP WHEN NOT USED.

REVISIONS			
LTR	DESCRIPTION	DATE	APPROVED
A	BY REV: ADD CABLE; DELETE WHT WIRE. ED & RR 01352	JWH 1-4-68	RLL
B	BY REV: -278 WAS -259 IN EQUIPMENT TABLE ED & RR 01361 SER 210-5897 & SERT210-0308	RLY 1-25-68	RLL
C	BY REV: 37451-0002 WAS 37451 & 37449-0002 WAS 37449 ED & RR 01992	RLY 4-11-68	GR MDS

CABLE		RG-58A/U		UG-88C/U			SERIALS
TAN/WHT	22	-22-10-9		SOLDER	SOLDER		
TAN/BLU	22	-22-10-6					
TAN/RED	22	-22-10-2					
TAN	22	-22-10					
WHT/BLU	22	-22-9-6					
WHT/GRN	22	-22-9-5					
WHT/YEL	22	-22-9-4					
WHT/RED	22	-22-9-2					
GRY/TAN	22	-22-8-10					
GRY/BLU	22	-22-8-6					
GRY/GRN	22	-22-8-5					
GRY/YEL	22	-22-8-4					
GRY/RED	22	-22-8-2					
GRY/BLK	22	-22-8-0					
BLU/TAN	22	-22-6-10					
BLU/WHT	22	-22-6-9					
WHITE	20(S)	S-1461-20-9					
BLU/BLK	22	-22-6-0					
YEL/GRN	20	-20-4-5					
GREEN	20	-20-5					
YELLOW	20	-20-4			SOLDER		
RED	18	-18-2			S-1367-2-8		
BLACK	18	-18-0			S-1367-2-8		
BLACK	22	-22-0		SOLDER	SOLDER		
WIRE CODE NO.	GA	MATERIAL	LG	TERMINALS			SERIALS

WIRE TABLE

ITEM NO	PART NO.	DESCRIPTION
9	11337	CONNECTOR (00781)
8	28776	CONNECTOR (00781)
7	-278	ANTENNA LEAD IN ASSY
6	S-1360-5	CIRCUIT BREAKER
5	37451-0002	CONNECTOR KIT (00781)
4	37449-0002	CONNECTOR KIT (00781)
3	34970-0000	ANTENNA (00781)
2	34960-1000	CONTROL UNIT (00781)
1	34950-0014	RCVR/XMTR (00781)

EQUIPMENT TABLE

CONTRACT NO

	NAME	DATE
DESIGN	G WOOD	11-20-67
GROUP	N. Wise	10-3-67
DRAWN	G WOOD	
CHECK	LAURIE	10-24-67
STRESS	ASHER	1-14-67
PROJECT		11-20-67
APPD		

Cessna AIRCRAFT CO.
COMMERCIAL AIRCRAFT DIV.
5800 E PAWNEE
WICHITA, KANSAS

TITLE
WIRING DIAGRAM —
CESSNA 400 TRANSPONDER
(ARC TYPE 506A)

SIZE	CODE IDENT. NO.	DWG NO
C	71379	1270475

SCALE | PAGE 2.51.1

FORM NO 80715

NOTES:

1. THIS PAGE TO BE USED WHEN TERMINAL BOARD IS NOT INSTALLED.

REVISION			
LET	DESCRIPTION	DATE	APPD

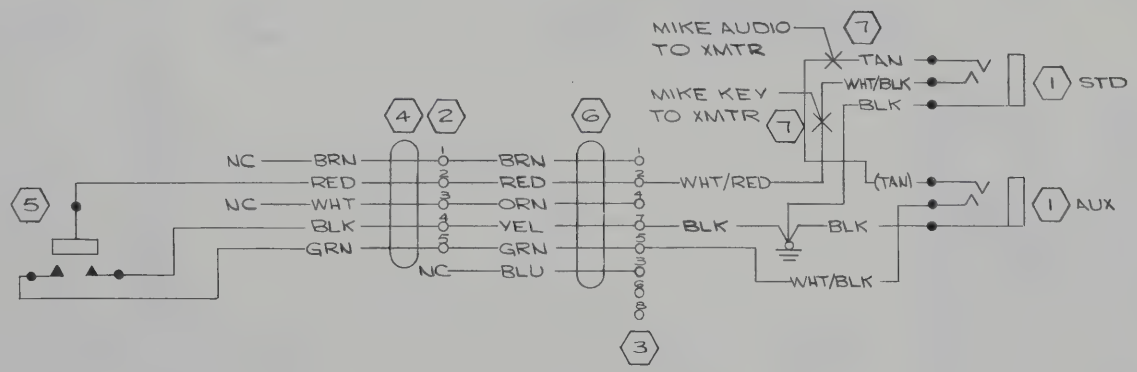

ITEM NO.	PART NO.	DESCRIPTION
7	S-1370-1	SPLICE
6	SF-1030-BX	CABLE (08261)
5	A8002	SWITCH (HETH)
4	8445	CABLE (70903)
3	8-171	TERM BLOCK(71785)
2	5-171	TERM BLOCK(71785)
1	S-1102-1	JACK

EQUIPMENT TABLE

CES-1000 IS APPLICABLE VENDOR CODES PER S-1400
CES-XXXX=CESSNA SPEC. NO.
S-XXX OR CMXXXX=CESSNA STD. NO.

SUPERSEDES:

SUPERSEDED BY:

WIRE CODE NO.	GA	MATERIAL	LG	TERMINALS		SERIALS
WHT/RED	22			S-1367-1-8	SOLDER	
WHT/BLK	↕			S-1367-1-8	SOLDER	
TAN	↕			SOLDER	SOLDER	
BLK	↕			SOLDER	S-1367-1-8	
BLK	↕			SOLDER	S-1367-1-8	
BLK	22			S-1367-1-8	S-1367-1-8	

WIRE TABLE

CONTRACT NO:

	NAME	DATE
DESIGN	G WOOD	11-22-67
GROUP	H. Wire	11-20-67
DRAWN	RCA XTELL	11-14-67
CHECK	M. SWANEY	11-16-67
STRESS	ASHER	11-20-67
PROJECT	[illegible]	11-17-67
APPD	S MARTIN	11-17-67

Cessna AIRCRAFT CO.
COMMERCIAL AIRCRAFT DIV.
5800 E. PAWNEE
WICHITA, KANSAS

TITLE
WIRING DIAGRAM — MIKE KEY-CONTROL WHEEL

SIZE	CODE IDENT. NO.	DWG NO.
C	71379	1270475

SCALE: NONE | 2105937EOM | PAGE: 2.52

FORM NO. 80-215A

T210-0308 EONED&RR00917

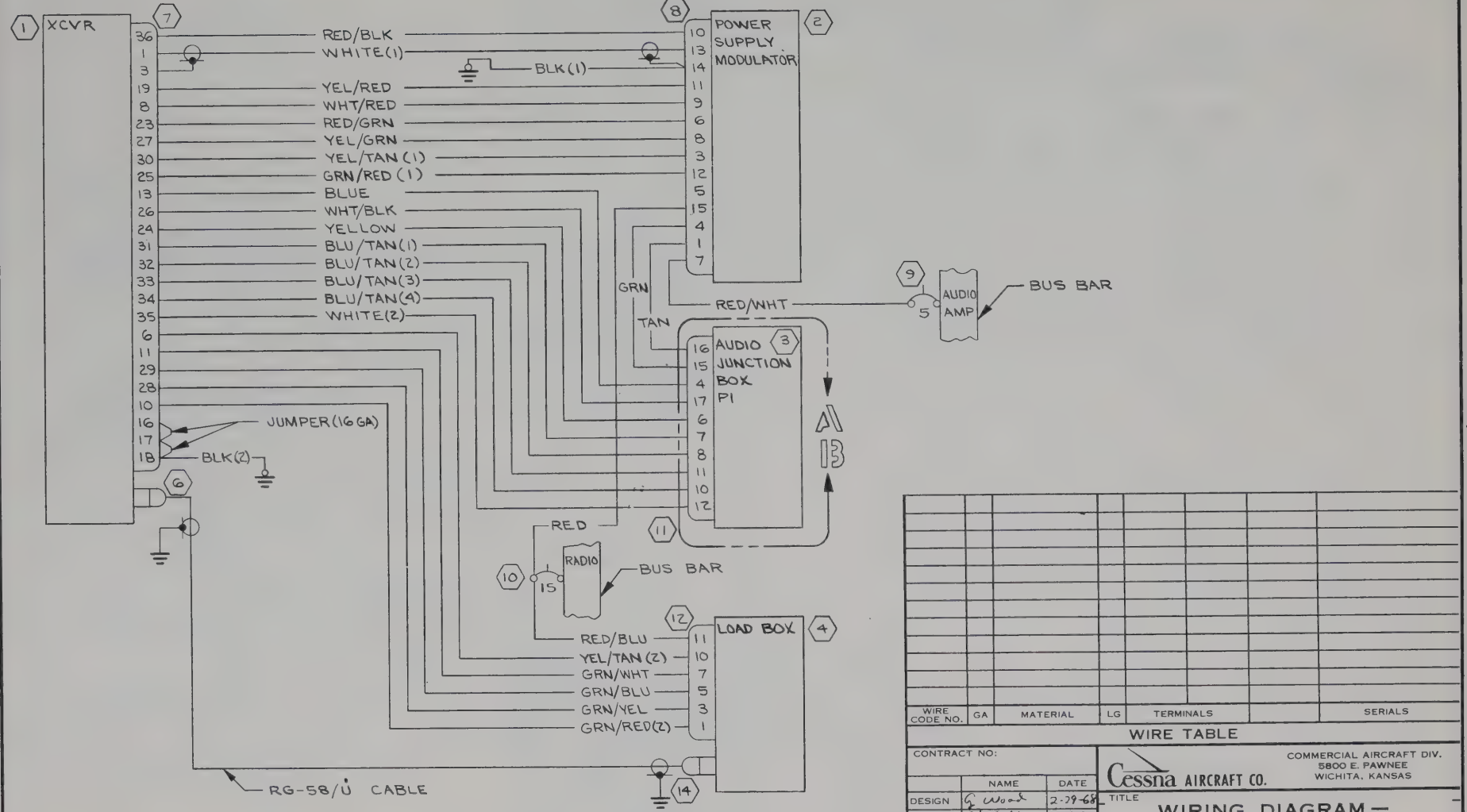

REVISION			
LET	DESCRIPTION	DATE	APPD

WIRE CODE NO.	GA	MATERIAL	LG	TERMINALS		SERIALS

WIRE TABLE

ITEM NO	PART NO.	DESCRIPTION

EQUIPMENT TABLE

CES-1000 IS APPLICABLE
VENDOR CODES PER S-1400
CES-XXXX=CESSNA SPEC. NO.
S-XXX OR CMXXXX=CESSNA STD. NO.

SUPERSEDES:

SUPERSEDED BY:

CONTRACT NO:

	NAME	DATE
DESIGN	G. Wood	2-19-68
GROUP	R. Wilson	2-21-68
DRAWN	C. GARCIA	2-15-68
CHECK	LAURIE RBS	2-17-68
STRESS	ASHER	2-20-68
PROJECT	[illegible]	3-1-68
APPD	JSM	2-20-68

Cessna AIRCRAFT CO.
COMMERCIAL AIRCRAFT DIV.
5800 E. PAWNEE
WICHITA, KANSAS

TITLE
WIRING DIAGRAM —
CESSNA 300 HF

SIZE	CODE IDENT. NO.	DWG NO.
C	71379	1270475

SCALE: NONE | 210-T210 | PAGE: 2.54.1.1

FORM NO. 80 215A

EDERR 01820 (SR5403) (SR5404) IX

REVISION			
LET	DESCRIPTION	DATE	APPD

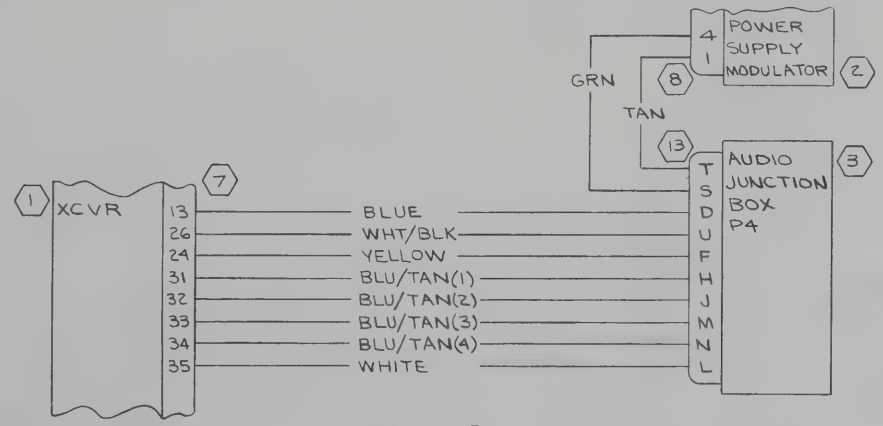

DETAIL A1
2ND INSTL

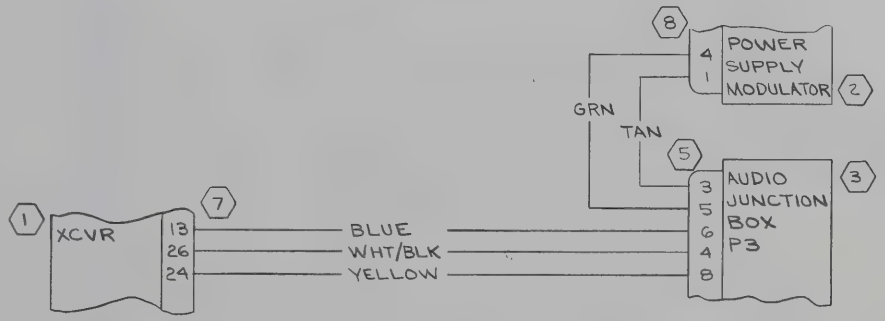

DETAIL B3
3RD INSTL
(BLU/TAN WIRES TO BE CAPPED ON 3RD INSTALLATION)

WIRE CODE NO.	GA	MATERIAL	LG	TERMINALS		SERIALS

WIRE TABLE

ITEM NO.	PART NO.	DESCRIPTION

EQUIPMENT TABLE

CES-1000 IS APPLICABLE VENDOR CODES PER S-1400
CES-XXXX=CESSNA SPEC. NO.
S-XXX OR CMXXXX=CESSNA STD. NO.

SUPERSEDES:

SUPERSEDED BY:

CONTRACT NO:

	*NAME	DATE
DESIGN	G. Wood	2-29-68
GROUP	H. Wise	2-21-68
DRAWN	C. GARCIA	2-15-68
CHECK	L. AURIE RRS	2-17-68
STRESS	ASHER	2-20-68
PROJECT		3-1-68
APPD		LSM 2-20-68

Cessna AIRCRAFT CO.
COMMERCIAL AIRCRAFT DIV.
5800 E. PAWNEE
WICHITA, KANSAS

TITLE
WIRING DIAGRAM —
CESSNA 300 HF

SIZE	CODE IDENT. NO.	DWG NO.
C	71379	1270475

SCALE: NONE	210-T210	PAGE: 2.54.1.2

FORM NO. 80-215A

ED&RR 01820 (SR5403)(SR5404)IX

REVISION			
LET	DESCRIPTION	DATE	APPD
A	BY REV: ADD NOTE 1 & 3A FUSE ED&RR 10119 (SR5403) & (SR5404) IX	9/25/68	JWH CKL MOS RFG WLW GMC

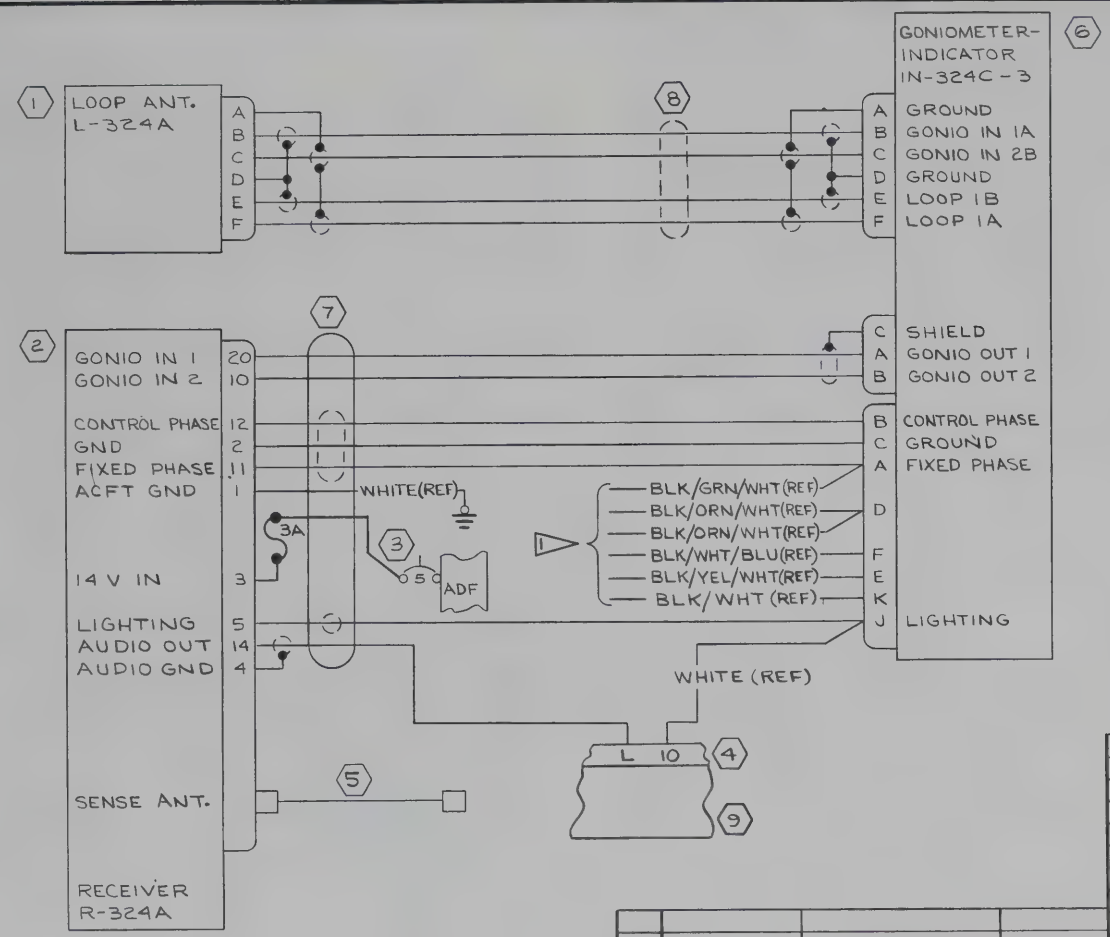

NOTES:

1. CUT & CAP WIRES AT APPROX 2" WHEN IN-324 IND IS USED

ITEM NO.	PART NO.	DESCRIPTION	PAGE
9	0570084-1	JUNCTION BOX ASSY	7.14
8	33827-0000	LOOP CABLE ASSY	3.32.0
7	37677-0014	CABLE ASSY	
6	38450-0003	GONIOMETER IND	3.32.0
5	-285	CABLE ASSY	2.57.0
4	S-1838-3	HOUSING	
3	S-1360-5	CIRCUIT BKR	3.32.0
2	36380-1000	RECEIVER	3.32.0
1	36420-1100	LOOP ANT.	6.11

EQUIPMENT TABLE

CES-1000 IS APPLICABLE VENDOR CODES PER S-1400
CES-XXXX=CESSNA SPEC. NO.
S-XXX OR CMXXXX=CESSNA STD. NO.

SUPERSEDES: P 2.31.1

SUPERSEDED BY:

WIRE CODE NO.	GA.	MATERIAL	LG	TERMINALS		SERIALS

WIRE TABLE

CONTRACT NO:

	NAME	DATE
DESIGN	G.WOOD	8-13-68
GROUP		8-13-68
DRAWN	C.GARCIA	7-23-68
CHECK	G IRVIN	8-9-68
STRESS	R.F.GEIDE	8-13-68
PROJECT		8-14-68
APPD	S.WANEY	8-12-68

Cessna AIRCRAFT CO.
COMMERCIAL AIRCRAFT DIV.
5800 E. PAWNEE
WICHITA, KANSAS

TITLE
WIRING DIAGRAM —
CESSNA 400 ADF
(ARC TYPE 324A)

SIZE	CODE IDENT. NO.	DWG NO.
C	71379	1270475

SCALE: NONE | 210-T210 | PAGE: 2.58.0

FORM NO 80-215A

ED&RR 02365 (SR5403)(SR5404) IX

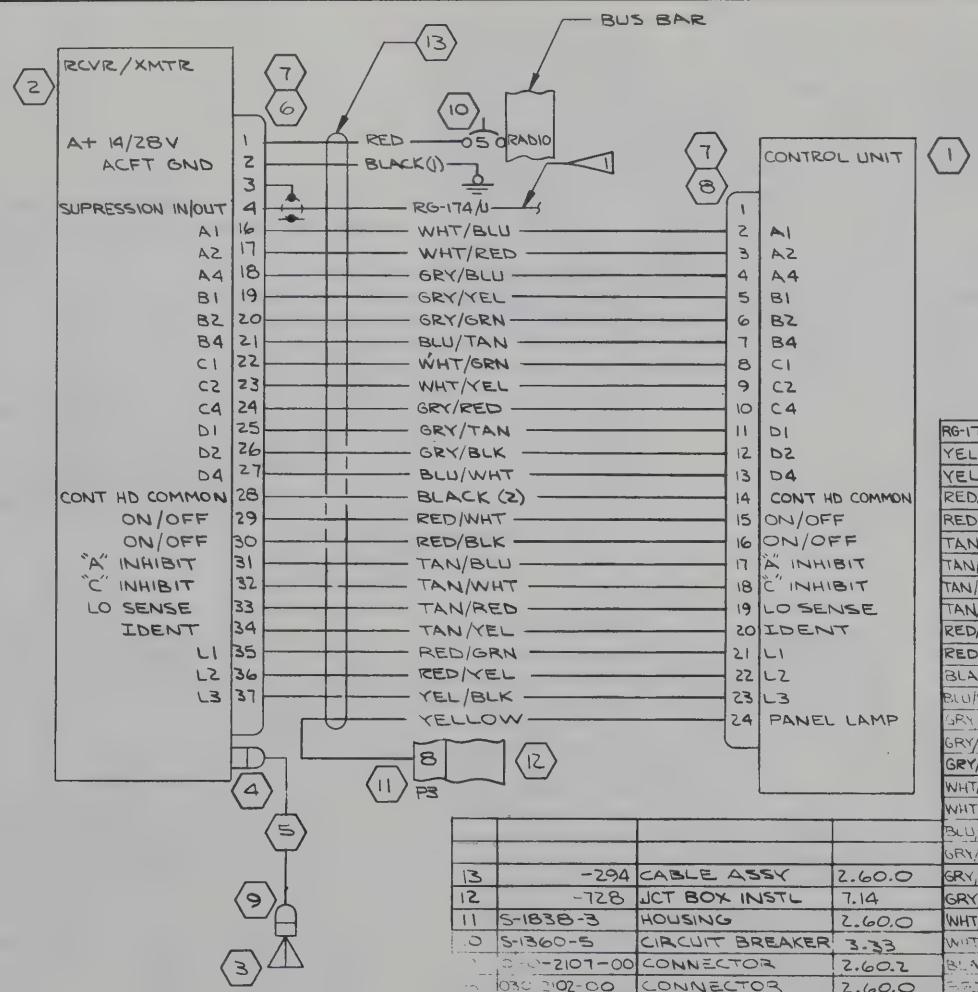

REVISION			
LET	DESCRIPTION	DATE	APPD
A	BY REV: GRY/RED WAS GRY/GRN(2), RED/WHT WAS RED(1), RED/BLK WAS RED(2), RED/YEL WAS YEL/WHT, YELLOW WAS GRY/YEL(2), GRY/YEL WAS GRY/YEL(1), GRY/GRN WAS GRY/GRN(1), RED WAS RED(3) ED&RR 10336 (SR5905)	RLY 1-23-69	JWH MDS

RG-174/U		CABLE		SOLDER	1		
YELLOW	20	-20-4		SOLDER	S-1837-1		
YEL/BLK	22	-22-4-0			SOLDER		
RED/YEL	22	-22-2-4					
RED/GRN	22	-22-2-5					
TAN/YEL	22	-22-10-4					
TAN/RED	22	-22-10-2					
TAN/WHT	22	-22-10-9					
TAN/BLU	22	-22-10-6					
RED/BLK	18	-18-2-0					
RED/WHT	18	-18-2-9					
BLACK(2)	20	-20-0					
BLU/WHT	22	-22-6-9					
GRY/BLK	22	-22-8-0					
GRY/TAN	22	-22-8-10					
GRY/RED	22	-22-8-2					
WHT/YEL	22	-22-9-4					
WHT/GRN	22	-22-9-5					
BLU/TAN	22	-22-6-10					
GRY/GRN	22	-22-8-5					
GRY/YEL	22	-22-8-4					
GRY/BLU	22	-22-8-6					
WHT/RED	22	-22-9-2					
WHT/BLU	22	-22-9-6			SOLDER		
BLACK(1)	18	-18-0			S-1367-2-8		
RED	18	-18-2		SOLDER	S-1367-2-8		
	A	MATERIAL	LG	TERMINALS			SERIALS

WIRE TABLE

ITEM NO	PART NO.	DESCRIPTION	PAGE
13	-294	CABLE ASSY	2.60.0
12	-728	JCT BOX INSTL	7.14
11	S-1838-3	HOUSING	2.60.0
10	S-1360-5	CIRCUIT BREAKER	3.33
[illegible]	[illegible]-2107-00	CONNECTOR	2.60.2
[illegible]	030-2102-00	CONNECTOR	2.60.0
[illegible]	[illegible]-019-00	CA CLAMP HALF	3.33 & 4.28
[illegible]	[illegible]-2109-00	CONNECTOR	2.60.0
5	-295	CABLE ASSY	2.60.2
4	030-0060-00	CONNECTOR	2.60.2
3	C589505-0101	ANTENNA	6.16
2	C589504-0101	RCVR/XMTR UNIT 12V	4.28
1	C589503-0101	CONTROL PANEL 12V	3.33

EQUIPMENT TABLE

NOTES:

1. SUPRESSOR CABLE ROUTES WITH CAB[illegible] TO CONTROL PANEL. CENTER CON[illegible]R CONNECTS TO PIN 4 OF 300 DME [illegible]ABLE & SHIELD CONNECTS TO PIN 8. CENTER CONDUCTOR TERMINATED WITH END CAP WHEN NOT USED

CES-1000 IS APPLICABLE
VENDOR CODES PER S-1400
CES-XXXX=CESSNA SPEC. NO.
S-XXX OR CMXXXX=CESSNA STD. NO.

SUPERSEDES:

SUPERSEDED BY:

CONTRACT NO

	NAME	DATE
DESIGN	VR SIPES	8/9/68
GROUP	H. Wise	11-12-68
DRAWN	YOUNGERS	10-31-68
CHECK	HARRIS	11-5-68
STRESS	Hutchison	11-11-68
PROJ	[illegible]	11-15-68
APPD	SWANEY	11-7-68

Cessna AIRCRAFT CO.
COMMERCIAL AIRCRAFT DIV.
5800 E PAWNEE
WICHITA, KANSAS

TITLE
WIRING DIAGRAM — CESSNA 300 TRANSPONDER

SIZE	CODE IDENT. NO.	DWG NO.
C	71379	1270475

SCALE: NONE | 210 & T210 | PAGE: 2.60.1

FORM NO. 80-215A

ED&RR 10045 (SR5905)

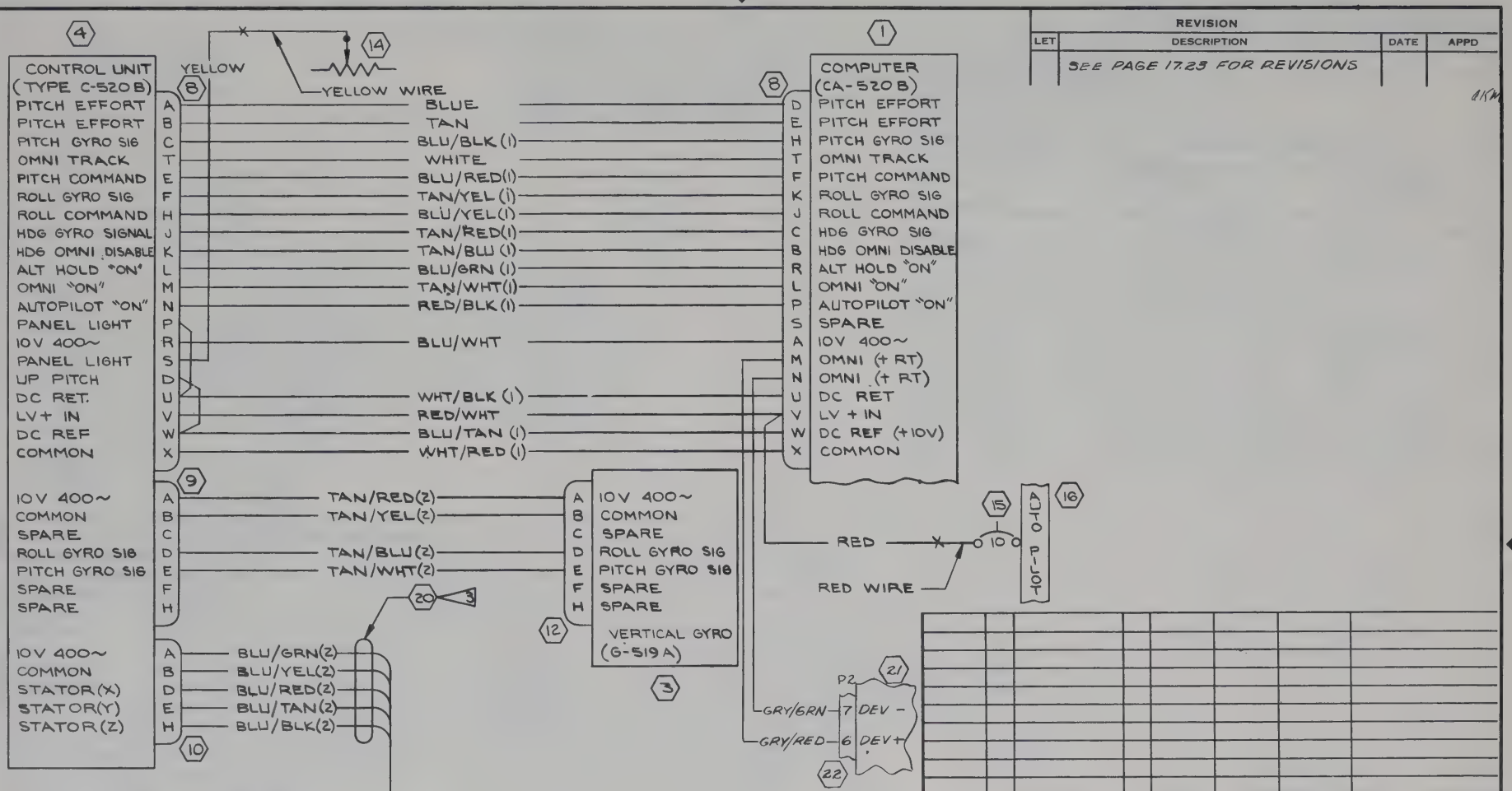

REVISION			
LET	DESCRIPTION	DATE	APPD
	SEE PAGE 17.23 FOR REVISIONS		

AKM

WIRE CODE NO.	GA	MATERIAL	LG	TERMINALS		SERIALS

WIRE TABLE

ITEM NO.	PART NO.	DESCRIPTION
		EQUIPMENT TABLE

CES-1000 IS APPLICABLE
VENDOR CODES PER S-1400
CES-XXXX=CESSNA SPEC. NO.
S-XXX OR CMXXXX=CESSNA STD. NO.

SUPERSEDES: P17.23.1

SUPERSEDED BY:

CONTRACT NO:

	NAME	DATE
DESIGN	LAURIE	
GROUP	R. Wind	6-5-68
DRAWN	YOUNGERS	5-27-68
CHECK	G. IRVIN	6-4-68
STRESS	D.R. Buth	6/5/68
PROJECT		6-6-68
APPD	SWANEY	6-9-68

Cessna AIRCRAFT CO.
COMMERCIAL AIRCRAFT DIV.
5800 E. PAWNEE
WICHITA, KANSAS

TITLE
WIRING DIAGRAM —
CESSNA 400 NAV-O-MATIC
(OPT)

SIZE	CODE IDENT. NO.	DWG NO.
C	71379	1270405

SCALE: NONE | 210 | PAGE: 17.23.3

FORM NO. 80-215A

ED & RR 02329 (SR5752)

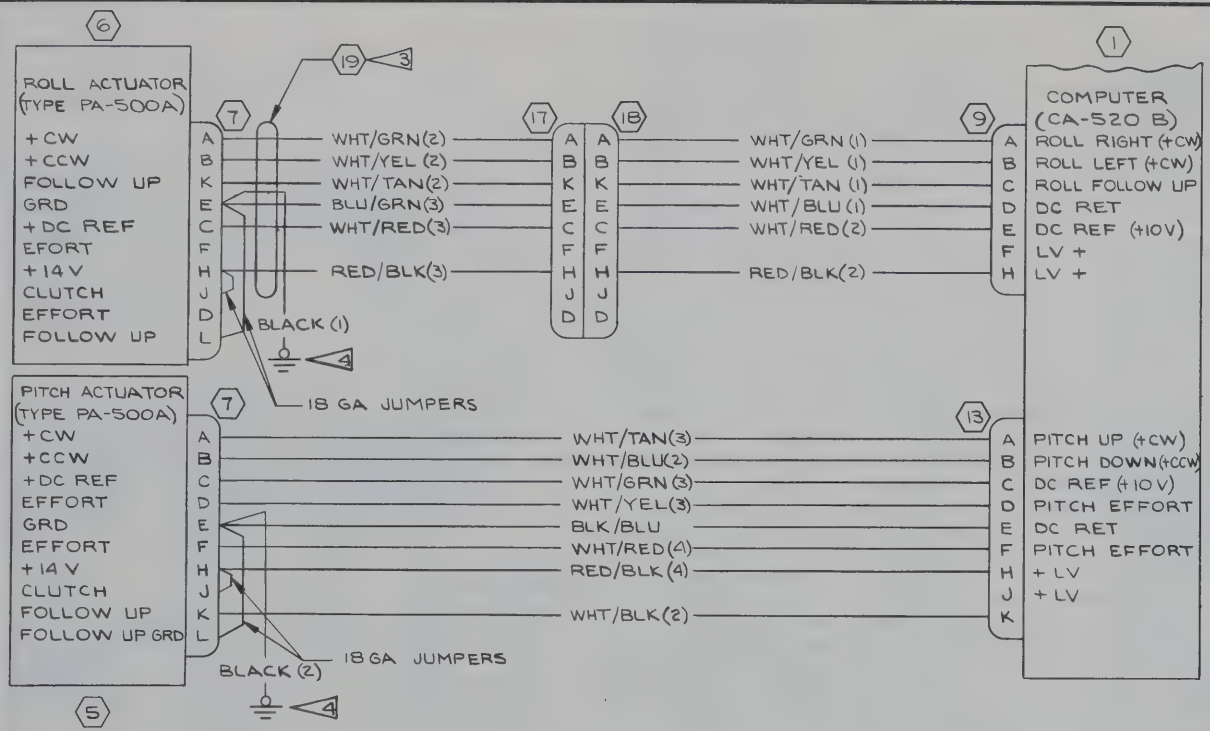

REVISION			
LET	DESCRIPTION	DATE	APPD

WIRE CODE NO.	GA	MATERIAL	LG	TERMINALS		SERIALS

WIRE TABLE

ITEM NO.	PART NO.	DESCRIPTION

EQUIPMENT TABLE

CES-1000 IS APPLICABLE VENDOR CODES PER S-1400 CES-XXXX=CESSNA SPEC. NO. S-XXX OR CMXXXX=CESSNA STD. NO.

SUPERSEDES: P17.23.1

SUPERSEDED BY:

CONTRACT NO:

	NAME	DATE
DESIGN	LAURIE	
GROUP	R. Wiod	6-5-68
DRAWN	YOUNGERS	5-27-68
CHECK	G. IRVIN	6-4-68
STRESS	D.R. Burn	6/5/68
PROJECT	[illegible]	6-6-68
APPD	SWANEY	6-4-68

Cessna AIRCRAFT CO.
COMMERCIAL AIRCRAFT DIV.
5800 E. PAWNEE
WICHITA, KANSAS

TITLE
WIRING DIAGRAM — CESSNA 400 NAV-O-MATIC (OPT)

SIZE	CODE IDENT. NO.	DWG NO.
C	71379	1270405

SCALE: NONE | 210 | PAGE: 17.23.4

FORM NO. 80-215A

ED&RR 02329 (SR5752)

REVISION			
LET	DESCRIPTION	DATE	APPD

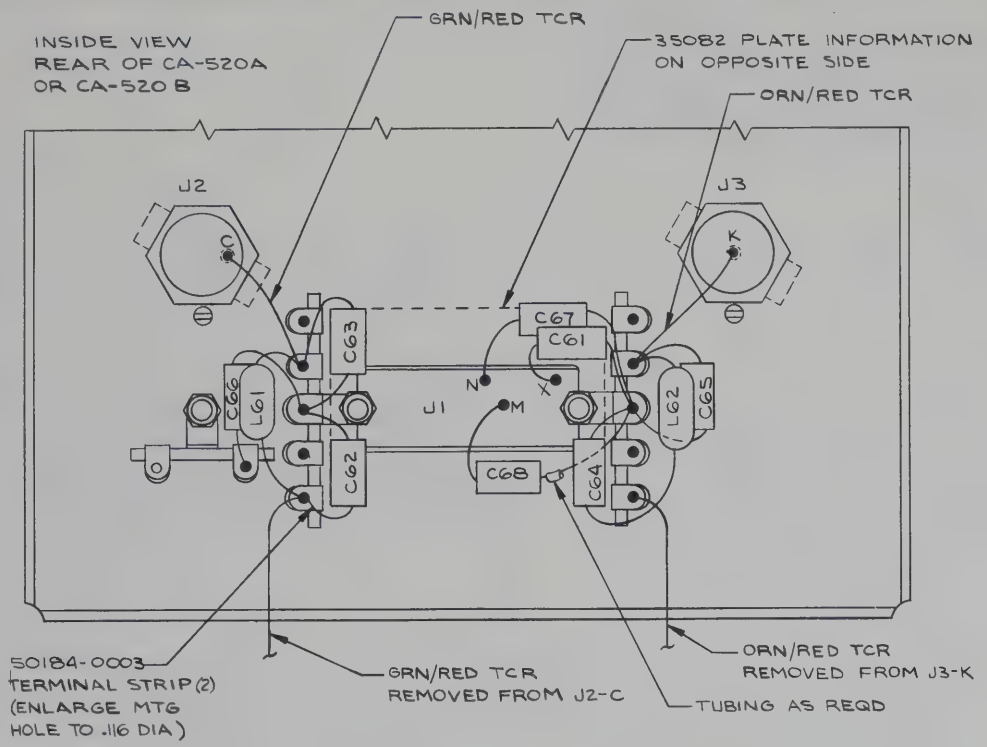

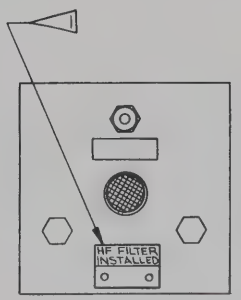

SCHEMATIC DIAGRAM

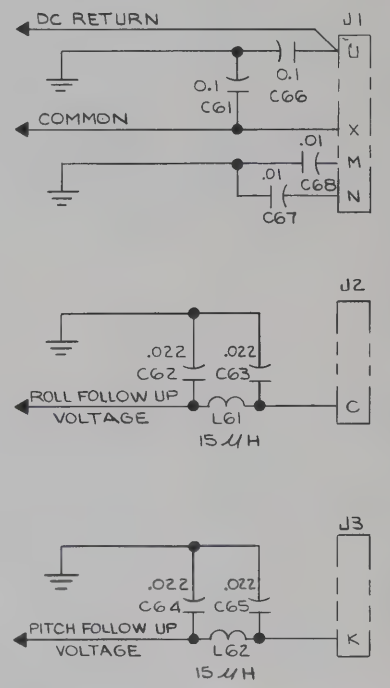

NOTES:

1. TO BE MOUNTED WITH EXISTING SCREWS WHEN MODIFICATION HAS BEEN COMPLETED
2. REMOVE NUTS FROM CONNECTOR J1, BACK OUT CONNECTOR, INSTALL INFORMATION PLATE 35082 REPLACE CONNECTOR ON CHASSIS THEN INSTALL TWO TERMINAL STRIPS 50184-0003 AS SHOWN USING CONNECTOR MTG SCREWS, REINSTALL NUTS
3. INSTALL CAPACITORS AND CHOKES AS SHOWN IN WIRING AND SCHEMATIC DIAGRAMS
4. UNSOLDER WIRES FROM J2-C AND J3-K AND RESOLDER TO NEW LOCATIONS AS SHOWN
5. CONTACTING SURFACES BETWEEN COMPUTER AND SHELF MUST BE CLEAN AND FREE OF CONTAMINANTS IN ORDER TO MAKE POSITIVE ELECTRICAL COTACT

FILTER KIT

ITEM NO.	ARC PART NO.	DESCRIPTION	QTY
1	32423-9223	.022 μF CAPACITOR	4
2	32423-9103	.010 μF CAPACITOR	2
3	32423-9102	.100 μF CAPACITOR	2
4	31193-0150	15 μH CHOKE	2
5	50184-0003	TERMINAL STRIP	2
6	35082	INFORMATION PLATE	1
7	21471-0502 (3")	GREEN/RED WIRE	1
8	21471-0302 (3")	ORANGE/RED WIRE	1
9	8800-0032 (6")	TUBING	1
10	35094	DRAWING	1

ITEM NO.	PART NO.	DESCRIPTION
	EQUIPMENT TABLE	

CES-1000 IS APPLICABLE
VENDOR CODES PER S-1400
CES-XXXX=CESSNA SPEC. NO.
S-XXX OR CMXXXX=CESSNA STD. NO.

SUPERSEDES: P17.23.1.1

SUPERSEDED BY:

CONTRACT NO:

	NAME	DATE
DESIGN	LAURIE	
GROUP	H. Wise	6-5-68
DRAWN	YOUNGERS	5-27-68
CHECK	G. IRVIN	6-4-68
STRESS	D. R. BUTH	6/5/68
PROJECT	P. Parker/AKM	6-6-68
APPD	SWANEY	6-4-68

Cessna AIRCRAFT CO.
COMMERCIAL AIRCRAFT DIV.
5800 E. PAWNEE
WICHITA, KANSAS

TITLE
WIRING DIAGRAM — NAV-O-MATIC 400 SYSTEM (OPT)

SIZE	CODE IDENT. NO.	DWG NO.
C	71379	1270405

SCALE: NONE | 210 | PAGE: 17.23.5

FORM NO. 80-215A

ED&RR 02329 (SP-5757)

REVISION			
LET	DESCRIPTION	DATE	APPD
A	SEE PAGE 17.26.0 FOR REVISION		

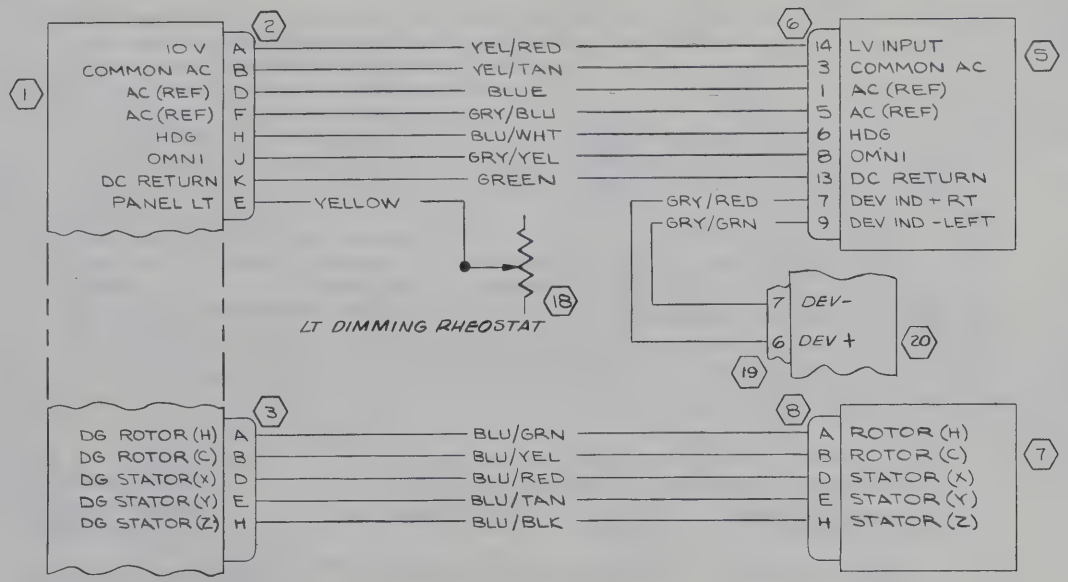

WIRE CODE NO.	GA	MATERIAL	LG	TERMINALS		SERIALS

WIRE TABLE

ITEM NO	PART NO.	DESCRIPTION

EQUIPMENT TABLE

CES-1000 IS APPLICABLE
VENDOR CODES PER S-1400
CES-XXXX=CESSNA SPEC. NO.
S-XXX OR CMXXXX=CESSNA
STD. NO.

SUPERSEDES:
P17.25.0 & P17.25.1

SUPERSEDED BY:

CONTRACT NO:

	NAME	DATE
DESIGN	LAURIE	
GROUP	R. Wiel	5-29-68
DRAWN	YOUNGERS	5-7-68
CHECK	G IRVIN	5-10-68
STRESS	D. R. BUTH	5/23/68
PROJECT	[illegible]	5/31/68
APPD	SWANEY	5-10-68

Cessna AIRCRAFT CO.
COMMERCIAL AIRCRAFT DIV.
5800 E. PAWNEE
WICHITA, KANSAS

TITLE
WIRING DIAGRAM —
CESSNA 300 NAV-O-MATIC
AUTOPILOT (14VOLT)

SIZE	CODE IDENT. NO.	DWG NO.
C	71379	1270405

SCALE: NONE | 210, T210 | PAGE: 17.26.1

FORM NO. 80-215A

ED & RR 02325 (SR5751)

REVISION			
LET	DESCRIPTION	DATE	APPD

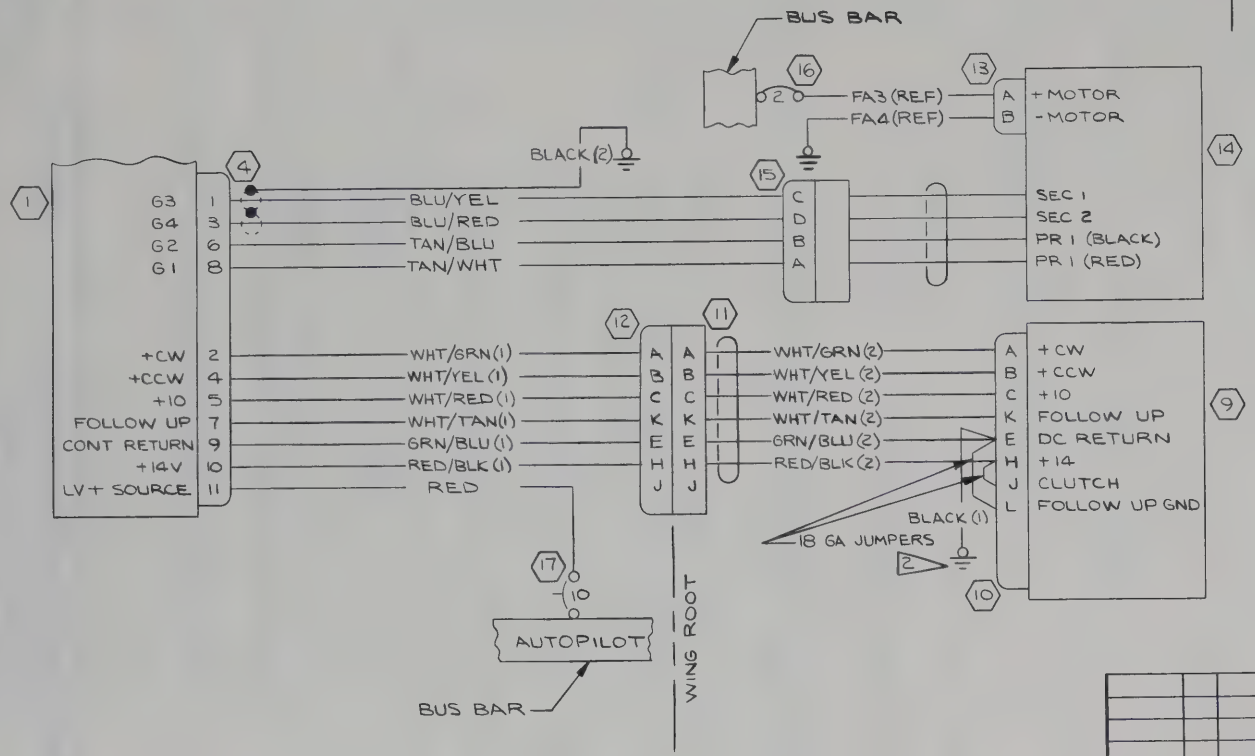

WIRE CODE NO.	GA	MATERIAL	LG	TERMINALS		SERIALS

WIRE TABLE

ITEM NO.	PART NO.	DESCRIPTION

EQUIPMENT TABLE

CES-1000 IS APPLICABLE
VENDOR CODES PER S-1400
CES-XXXX=CESSNA SPEC. NO.
S-XXX OR CMXXXX=CESSNA STD. NO.

SUPERSEDES: P17.25.0 & P17.25.1

SUPERSEDED BY:

CONTRACT NO:

	NAME	DATE
DESIGN	LAURIE	
GROUP	R. Wise	5-27-68
DRAWN	YOUNGERS	5-7-68
CHECK	G IRVIN	5-10-68
STRESS	D.R. Bruin	5/29/68
PROJECT	[illegible]	5/25/68
APPD	SWANEY	5-10-68

Cessna AIRCRAFT CO.
COMMERCIAL AIRCRAFT DIV.
5800 E. PAWNEE
WICHITA, KANSAS

TITLE
WIRING DIAGRAM — CESSNA 300 NAV-O-MATIC AUTOPILOT (14VOLT)

SIZE	CODE IDENT. NO.	DWG NO.
C	71379	1270405

SCALE: NONE | 210, T210 | PAGE: 17.26.2

FORM NO. 80-215A

ED&RR 02325 (SR5751)

TABLE OF CONTENTS

337 SERIAL 337-0979 & ON
T337 SERIAL T337-0979 & ON

PAGE NO.	TITLE	DATE ISSUED	REV
2.0.3	W. D. - Speaker, Phone Jack & Microphone Jack	9-3-68	NC
2.0.4	S. D. - Audio Junction Box, Internal Wiring	3-7-69	NC
2.1.5	Cessna 300 Nav/Com	12-5-68	C
2.1.6	Cessna 300 Nav/Com	12-5-68	C
2.24.2	Cessna 300 Marker Beacon	12-5-68	B
2.25.1	Cessna 300 Transceiver	8-7-68	A
2.26.3	Cessna 300 DME	8-8-68	A
2.34.1	Cessna 300 ADF (ARC Type R-521B)	8-8-68	A
2.47.2	Audio System, 300 & 400 Series	9-24-68	B
2.47.3	Audio System, 300 & 400 Series	9-24-68	B
2.58.1	W. D. - Cessna 400 Glideslope (ARC Type R543B)	12-20-67	A
2.59.1	W. D. - Cessna 400 Glideslope (ARC Type R543B)	12-20-67	A
2.60.2.2	Cessna 400 Nav/Com (ARC Type RT-522A & RT-532A)	5-11-68	NC
2.60.2.3	Cessna 400 Nav/Com (ARC Type RT-522A & RT-532A)	5-11-68	NC
2.61.0	W. D. - Pitch Trim, Mike & Map Light Control	8-8-68	C
2.61.1	W. D. - Pitch Trim & Mike Switch Control Wheel	8-8-67	NC
2.61.3	W. D. - Auxiliary Microphone Jack & Control Wheel Key	4-30-68	NC
2.62	W. D. - Pitch Trim & Mike Switch, Control Wheel	12-11-67	B
2.63	W. D. - Pitch Trim & Map Light Control Wheel	12-11-67	B
2.64.0	Audio System - Dual 400 Nav/Com & 400 (ARC Type RT-522A & RT-532A)	7-26-67	NC
2.66.2	Selector Switch - Transmitter	8-8-68	A
2.66.3	Cable Assy - Transmitter Selector Switch	5-11-68	NC
2.69.3	Cessna 400 Transponder (ARC Type 506A)	8-8-68	A

TABLE OF CONTENTS

PAGE NO.	TITLE	DATE ISSUED	REV
2.71.1.1	Cessna 300 HF	3-7-68	NC
2.71.1.2	Cessna 300 HF	3-7-68	NC
2.72.1	W. D. - Cessna 400 ADF (ARC Type 324A)	10-9-68	B
2.73.0	Cable Assy - Audio Selector Switches, Accessory Kits	10-2-68	A
2.73.1	W. D. - Audio Selector Switches, Accessory Kits	10-2-68	A
2.74.1	W. D. - Cessna 300 Transponder	2-3-69	A
	DRAWING NUMBER 1570000		
14.4.5	Cessna 400 Nav-O-Matic (Opt.)	11-7-68	A
14.4.6	Cessna 400 Nav-O-Matic (Opt.)	6-6-68	NC
14.4.7	Nav-O-Matic 400 System (Opt.)	6-6-68	NC
14.7.1	Cessna 300 Nav-O-Matic Autopilot (24-Volt)	6-6-68	NC
14.7.2	Cessna 300 Nav-O-Matic Autopilot (24-Volt)	6-6-68	NC

REVISION			
LET	DESCRIPTION	DATE	APPD
A	BY REV: WHITE WAS WHT/BLK ED & RR 10112 SER(SR 5441) IX	SEM	

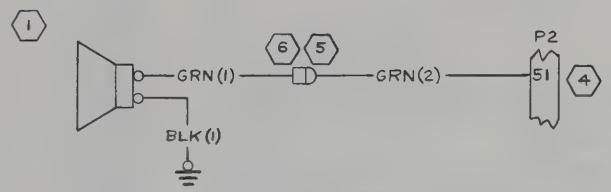

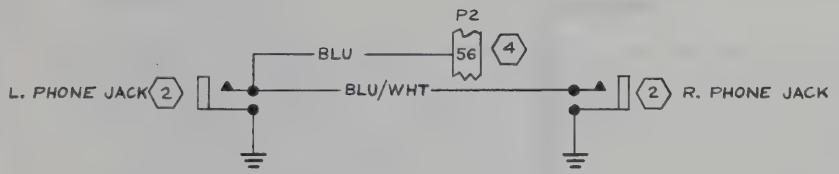

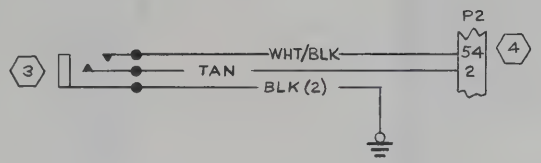

WIRE CODE NO.	GA	MATERIAL	LG	TERMINALS			SERIALS
BLK(2)	22	-22-0		SOLDER	S-1367-1-8		
BLK(1)	22	-22-0		S-1829-1	S-1367-1-8		
TAN	22	-22-10		SOLDER	S-1837-1		
WHT/BLK	22	-22-9-0		SOLDER	S-1837-1		
BLU/WHT	22	-22-6-9		SOLDER	SOLDER		
BLU	22	-22-6		SOLDER	S-1837-1		
GRN(2)	20	-20-5		S-1837-1	S-1636-1		
GRN(1)	20	-20-5		S-1635-1	S-1829-1		

WIRE TABLE

ITEM NO.	PART NO.	DESCRIPTION
6	S-1637-1	HOUSING-CAP
5	S-1637-2	HOUSING-PLUG
4	S-1838-1	CONNECTOR
3	S-1102-1	MICROPHONE JACK
2	S-1103-1	PHONE JACK
1	C596504-0101	SPEAKER

EQUIPMENT TABLE

CES-1000 IS APPLICABLE
VENDOR CODES PER S-1400
CES-XXXX=CESSNA SPEC. NO.
S-XXX OR CMXXXX=CESSNA STD. NO.

SUPERSEDES: P 2.0.1

SUPERSEDED BY:

CONTRACT NO:

	NAME	DATE
DESIGN	SIPES VR	8/5/68
GROUP	H. Wise	8-30-68
DRAWN	RB IRWIN	8-26-68
CHECK	G IRVIN	8-27-68
STRESS	DK McCash	8-29-68
PROJECT	N McCarter	8-29-68
APPD	SWANSON	8-28-68

Cessna AIRCRAFT CO.
COMMERCIAL AIRCRAFT DIV.
5800 E. PAWNEE
WICHITA, KANSAS

TITLE
WIRING DIAGRAM — SPEAKER, PHONE JACK & MICROPHONE JACK

SIZE	CODE IDENT. NO.	DWG NO.
C	71379	1570001

SCALE: NONE | 337 | PAGE: 2.0.3

FORM NO. 80-215A

ED & RR 10037 (SR5441) IX

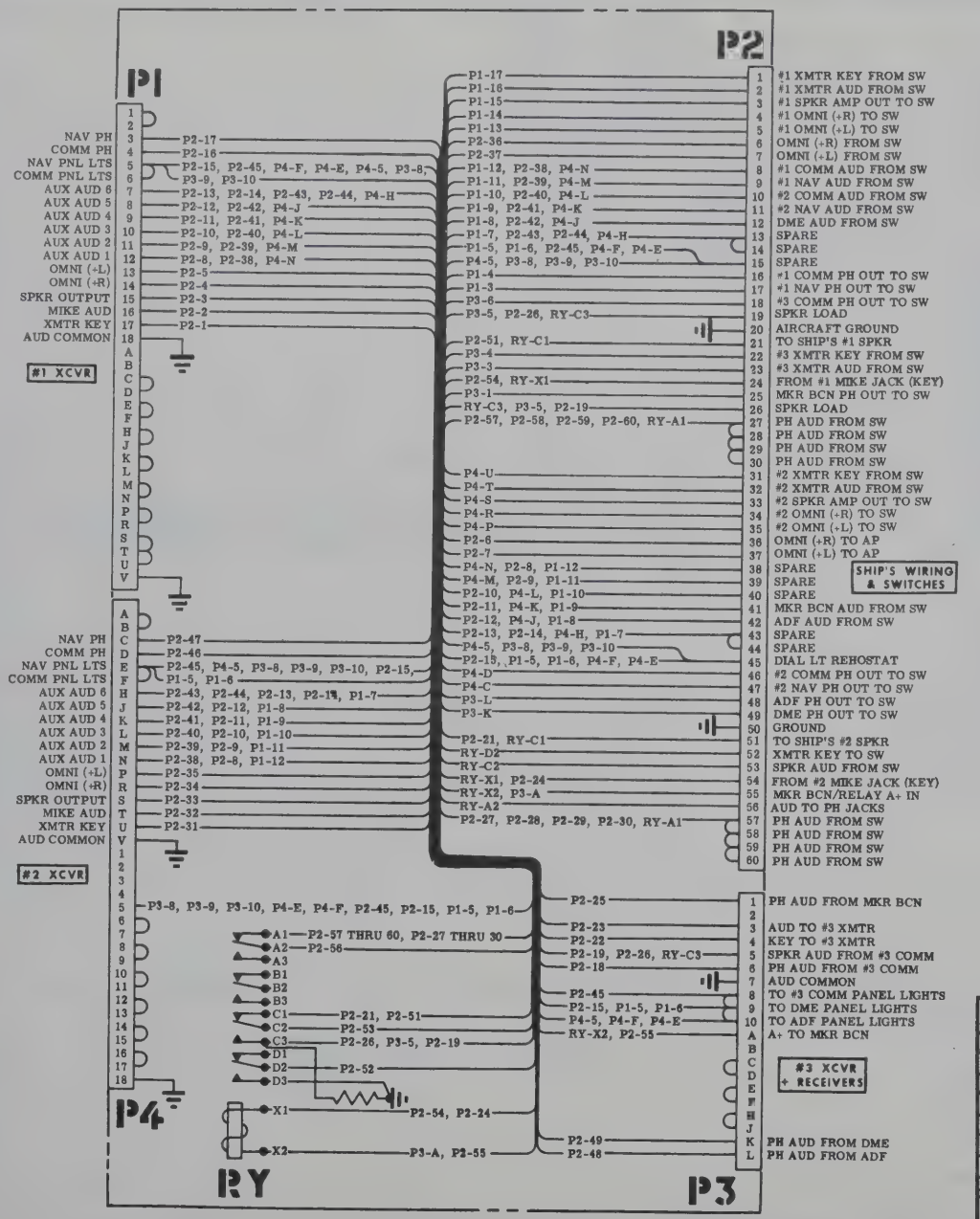

REVISIONS			
LTR	DESCRIPTION	DATE	APPROVED
A	BY REV: 465195-2 WAS 46195-2; ADD NOTE 8 EDRR 24170	DGP 4-·69	

NOTES:

1. THIS DRAWING FOR TECHNICAL USE ONLY
2. P1 AND P4 MATE WITH S-1838-2 HOUSING (AMP 1-582191-5)
3. P2 MATES WITH S-1838-1 HOUSING (AMP 480146-7)
4. P3 MATES WITH S-1838-3 HOUSING (AMP 582963-2)
5. ALL THE ABOVE HOUSINGS USE S-1837-1 CONTACT PINS (AMP 42717-3LP) AND S-1836-1 KEYING PLUGS (AMP 582501-1)
6. CONTACTS CRIMP ON WITH AMP TOOL 90017
7. CONTACTS EXTRACT WITH AMP TOOL 465195-2
8. IF A CRIMPING TOOL IS NOT AVAILABLE WIRES MAY BE SOLDERED TO PINS IN LIEU OF CRIMPING

CONTRACT NO:	NAME	DATE
DESIGN	V R SIPES	1-13-69
GROUP	A. Wise	3-11-69
DRAWN	NUCKOLLS	2-7-69
CHECK	HARRIS	3-4-69
STRESS	DK McCosh	3-6-69
PROJECT	J R Sattler	3-12-69
APPD	M O'Leary	3-5-69

Cessna AIRCRAFT CO.
COMMERCIAL AIRCRAFT DIV.
5800 E. PAWNEE
WICHITA, KANSAS

TITLE
SCHEMATIC DIAGRAM - AUDIO JUNCTION BOX, INTERNAL WIRING

SIZE	CODE IDENT. NO.	DWG NO.
C	71379	1570001

SCALE: NONE | 337 | PAGE: 2.0.4

EDRR 10316 SER 337-0979 & ON

REVISION			
LET	DESCRIPTION	DATE	APPD
C	REFER TO PAGE 2.1.4		

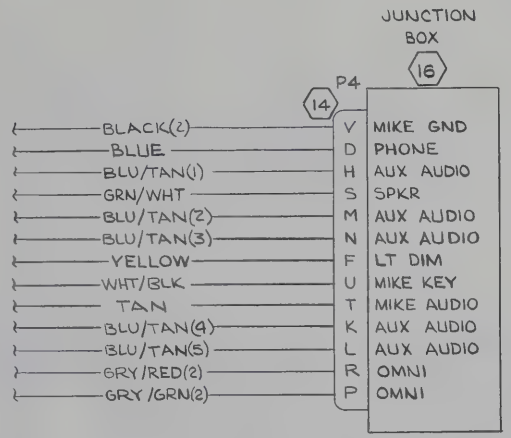

DETAIL A
2ND RADIO INSTL

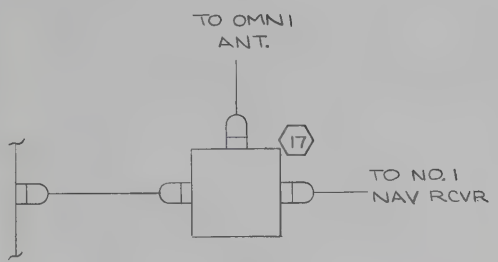

DETAIL B
2ND RADIO INSTL

WIRE CODE NO.	GA	MATERIAL	LG	TERMINALS			SERIALS

WIRE TABLE

ITEM NO.	PART NO.	DESCRIPTION
		EQUIPMENT TABLE

CES-1000 IS APPLICABLE
VENDOR CODES PER S-1400
CES-XXXX=CESSNA SPEC. NO.
S-XXX OR CMXXXX=CESSNA STD. NO.

SUPERSEDES: P 2.1.1

SUPERSEDED BY:

CONTRACT NO:

	NAME	DATE
DESIGN	Wilkinson	5-10-68
GROUP	R. Wines	5-10-68
DRAWN	YOUNGERS	4-29-68
CHECK	G IRVIN	5-9-68
STRESS	O.K. McCosh	5-10-68
PROJECT	H Sattler	5-10-68
APPD	SWANEY	5-9-68

Cessna AIRCRAFT CO.
COMMERCIAL AIRCRAFT DIV.
5800 E. PAWNEE
WICHITA, KANSAS

TITLE
WIRING DIAGRAM—
CESSNA 300 NAV/COM
(ARC TYPE RT-540A)

SIZE	CODE IDENT. NO.	DWG NO.
C	71379	1570001

SCALE: NONE | 337 | PAGE: 2.1.5

FORM NO. 80-215A

ED&RR 01852 (SR5441) IX

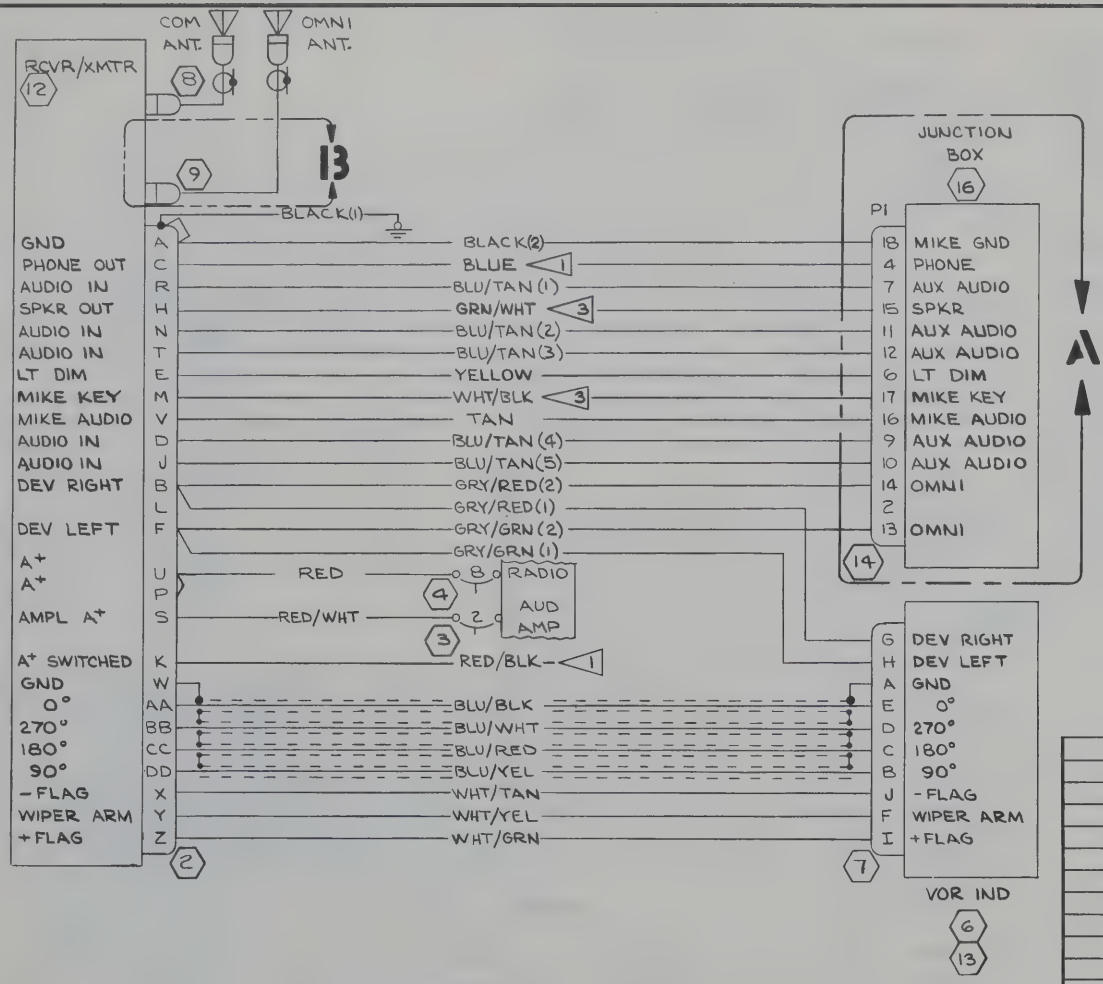

REVISION			
LET	DESCRIPTION	DATE	APPD
C	REFER TO PAGE 2.14		

WIRE CODE NO.	GA	MATERIAL	LG	TERMINALS		SERIALS

WIRE TABLE

ITEM NO.	PART NO.	DESCRIPTION
		EQUIPMENT TABLE

CES-1000 IS APPLICABLE
VENDOR CODES PER S-1400
CES-XXXX=CESSNA SPEC. NO.
S-XXX OR CMXXXX=CESSNA
STD. NO.

SUPERSEDES: P 2.1.1

SUPERSEDED BY:

CONTRACT NO:

	NAME	DATE
DESIGN	W. Dickerson	5-10-68
GROUP	N. Wise	5-10-68
DRAWN	YOUNGERS	4-29-68
CHECK	G. IRVIN	5-9-68
STRESS	D.K. Cook	5-10-68
PROJECT	[illegible]	5-10-68
APPD	SWANEY	5-9-68

Cessna AIRCRAFT CO.
COMMERCIAL AIRCRAFT DIV.
5800 E. PAWNEE
WICHITA, KANSAS

TITLE
WIRING DIAGRAM —
CESSNA 300 NAV/COM
(ARC TYPE RT-540A)

SIZE	CODE IDENT. NO.	DWG NO.
C	71379	1570001

SCALE: NONE | 337 | PAGE: 2.1.6

FORM NO. 80-215A

ED&RR 01852 (SR 5441) IX

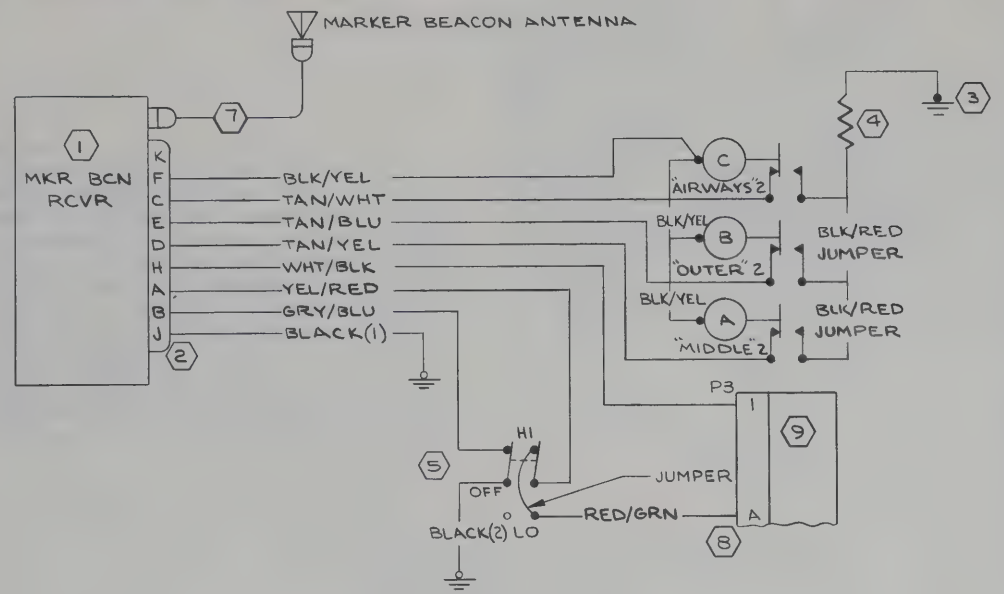

REVISION			
LET	DESCRIPTION	DATE	APPD
A	BY REV: ADD P3; HOUSING WAS CONNECTOR ED & RR 10025 (SR 5441) IX	EGY 8-5-68	GLI MDS DKM WNW
B	BY REV: S-1837-1 WAS S-1367-1-6 ED & RR 10258	FER 11-21-68	WNW MDS DKM NHW

WIRE CODE NO.	GA	MATERIAL	LG	TERMINALS			SERIALS
TAN/WHT	22	-22-10-9		SOLDER	SOLDER		
TAN/BLU	22	-22-10-6			SOLDER		
TAN/YEL	22	-22-10-4			SOLDER		
GRY/BLU	22	-22-8-6			SOLDER		
WHT/BLK	20	-20-9-0			S-1837-1		
YEL/RED	20	-20-4-2			SOLDER		
RED/GRN	20	-20-2-5			S-1837-1		
BLACK(1)	22	-22-0			S-1367-1-8		
BLACK(2)	22	-22-0			S-1367-1-8		
BLK/YEL	22	-22-0-4		SOLDER	SOLDER		

WIRE TABLE

ITEM NO.	PART NO.	DESCRIPTION	
9	05700084-2	JUNCTION BOX ASSY	
8	S-1838-3	HOUSING	
7	-265	CABLE ASSY	
6			
5	S-1696-2	SWITCH (95146)	
4	82Ω, 2WATT	RESISTOR (00781)	
3	28487	TERMINAL (00781)	
2	28371-0009	PLUG (00781)	
1	31240-0028	MKR BCN RCVR	(00781)

EQUIPMENT TABLE

CES-1000 IS APPLICABLE
VENDOR CODES PER S-1400
CES-XXXX=CESSNA SPEC. NO.
S-XXX OR CMXXXX=CESSNA STD. NO.

SUPERSEDES: P 2.24.1

SUPERSEDED BY:

CONTRACT NO:

	NAME	DATE
DESIGN	[illegible]	5-10-68
GROUP	R. Wise	5-10-68
DRAWN	YOUNGERS	4-29-68
CHECK	G. IRVIN	5-9-68
STRESS	[illegible]	5-10-68
PROJECT	[illegible]	5-10-68
APPD	SWANEY	5-9-68

Cessna AIRCRAFT CO.
COMMERCIAL AIRCRAFT DIV.
5800 E. PAWNEE
WICHITA, KANSAS

TITLE
WIRING DIAGRAM — CESSNA 300 MARKER BEACON

SIZE	CODE IDENT. NO.	DWG NO.
C	71379	1570001

SCALE: NONE | 337 | PAGE: 2.24.2

FORM NO. 80-215A

ED & RR 01852 (SR 5441) IX

REVISION			
LET	DESCRIPTION	DATE	APPD
A	BY REV: ADD P1 & P4; DELETE S-1838-1 ED & RR 10025 (SR5441) IX	EGY 8-5-68	GKI MDS DKM WHH 1/A/c/8 mc

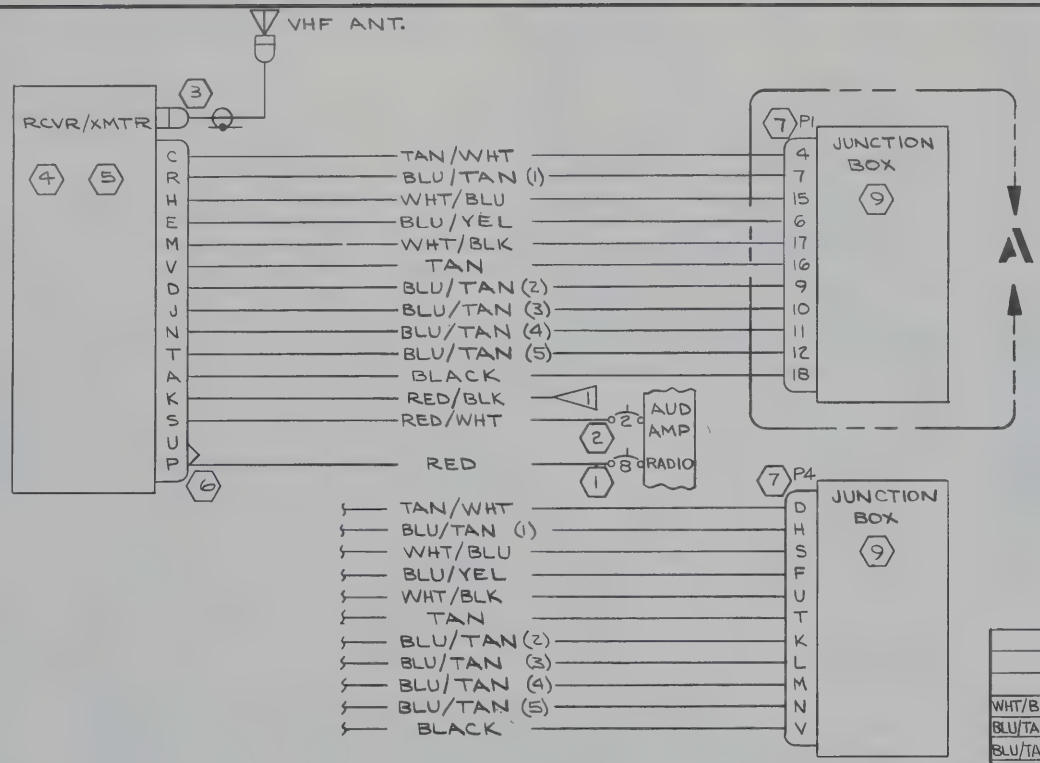

NOTES:

1. ON SINGLE CESSNA COM 300 INSTL, RED/BLK WIRE (PIN K) IS CONNECTED TO RED/WHT WIRE (PIN S) WITH AN S-1370-1 SPLICE, AND BLUE WIRE (PIN C) IS CONNECTED TO BLU/TAN WIRE (PIN R) WITH AN S-1370-1 SPLICE. WHEN THE COM 300 IS INSTALLED WITH OTHER RADIO UNITS, RED/WHT WIRE CONNECTS TO CKT BKR AS SHOWN & RED/BLK WIRE IS TERMINATED WITH S-1557-1 CAP; BLUE WIRE CONNECTS TO WIPER OF A SPKR-PHONE SWITCH & BLU/TAN WIRE CONNECTS TO SPKR TERMINAL OF SPKR-PHONE SWITCH.

ITEM NO.	PART NO.	DESCRIPTION	
9	0570084-2	JUNCTION BOX ASSY	
8			
7	S-1838-2	HOUSING (00779)	
6	29747-0018	CONNECTOR (00781)	
5	31390-1628	RCVR/XMTR (00781)	(EXP)
4	31390-1128	RCVR/XMTR (00781)	
3	29753	CONNECTOR (00781)	
2	S-1360-2	CIRCUIT BREAKER	
1	S-1360-8	CIRCUIT BREAKER	

EQUIPMENT TABLE

CES-1000 IS APPLICABLE
VENDOR CODES PER S-1400
CES-XXXX=CESSNA SPEC. NO.
S-XXX OR CMXXXX=CESSNA STD. NO.

SUPERSEDES: P 2.25

SUPERSEDED BY:

WIRE CODE NO.	GA	MATERIAL	LG	TERMINALS			SERIALS
WHT/BLK	22	-22-9-0		SOLDER	S-1837-1		
BLU/TAN(1)	22	-22-6-10			S-1837-1		
BLU/TAN(2)	22	-22-6-10			S-1837-1		
BLU/TAN(3)	22	-22-6-10			S-1837-1		
BLU/TAN(4)	22	-22-6-10			S-1837-1		
BLU/TAN(5)	22	-22-6-10			S-1837-1		
RED/WHT	18	-18-2-9			S-1367-1-6		
RED/BLK	18	-18-2-0			S-1837-1		
BLACK	22	-22-0			S-1837-1		
TAN	22	-22-10			S-1837-1		
TAN/WHT	22	-22-10-9			S-1837-1		
RED	16	-16-2			S-1367-1-6		
BLU/YEL	22	-22-6-4			S-1837-1		
WHT/BLU	22	-22-9-6		SOLDER	S-1837-1		

WIRE TABLE

CONTRACT NO:

	NAME	DATE
DESIGN	[illegible]	5-10-68
GROUP	H. Wire	5-10-68
DRAWN	YOUNGERS	4-29-68
CHECK	G. IRVIN	5-9-68
STRESS	DKM Cook	5-10-68
PROJECT	JR Sattler	5-10-68
APPD	SWANEY	5-9-68

Cessna AIRCRAFT CO.
COMMERCIAL AIRCRAFT DIV.
5800 E. PAWNEE
WICHITA, KANSAS

TITLE
WIRING DIAGRAM — CESSNA 300 TRANSCEIVER

SIZE	CODE IDENT. NO.	DWG NO.
C	71379	1570001

SCALE: NONE | 337 | PAGE: 2.25.1

FORM NO. 80-215A

ED&RR 01852 (SR5441) IX

REVISION			
LET	DESCRIPTION	DATE	APPD
A	BY REV: ADD P3; HOUSING WAS CONNECTOR ED & RR 10025 (SR 5441) IX	EGY 8-5-68	GKI MDS DKM WHH HMc/g. C

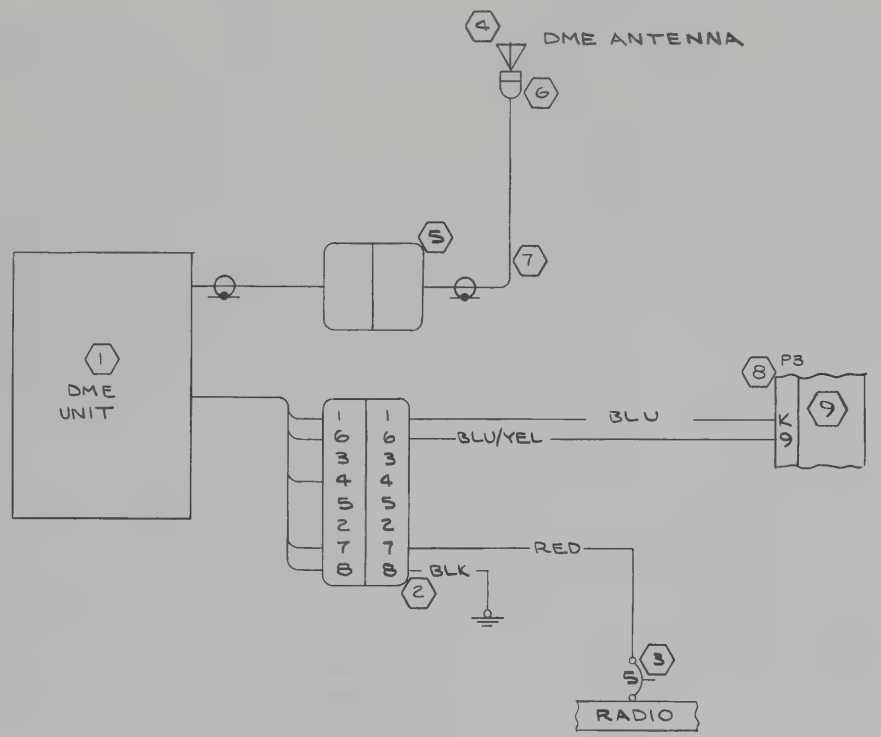

NOTES:

1. ITEMS 5, 6 & 7 ARE SUPPLIED AS PART OF KING INSTL KIT NO. 050-1052-00

ITEM NO.	PART NO.	DESCRIPTION
9	0570080-2	JUNCTION BOX
8	S-1838-3	HOUSING (00779)
7	024-0001-00	RF CABLE (22373)
6	030-24-00	CONNECTOR RT ANGLE (22373)
5	030-0021-01	CONNECTOR (22373)
4	KA-15	ANTENNA (22373)
3	S-1360-5	CIRCUIT BKR
2	030-2043-00	CONNECTOR (22373)
1	C582602-0101	DME UNIT

EQUIPMENT TABLE

WIRE CODE NO.	GA	MATERIAL	LG	TERMINALS			SERIALS
BLU	22	-22-6		SOLDER	S-1837-1		
BLU/YEL	22	-22-6-4		SOLDER	S-1837-1		
RED	16	-16-2		SOLDER	S-1367-2-6		
BLACK	16	-16-0		SOLDER	S-1367-2-8		

WIRE TABLE

CES-1000 IS APPLICABLE
VENDOR CODES PER S-1400
CES-XXXX=CESSNA SPEC. NO.
S-XXX OR CMXXXX=CESSNA STD. NO.

SUPERSEDES: P 2.26.1

SUPERSEDED BY:

CONTRACT NO:

	NAME	DATE
DESIGN	W. Jackinson	5-10-68
GROUP	H. Wise	5-10-68
DRAWN	YOUNGERS	4-29-68
CHECK	G. IRVIN	5-9-68
STRESS	DK McCosh	5-10-68
PROJECT	JR Sattler	5-10-68
APPD	SWANEY	5-9-68

Cessna AIRCRAFT CO.
COMMERCIAL AIRCRAFT DIV.
5800 E. PAWNEE
WICHITA, KANSAS

TITLE
WIRING DIAGRAM — CESSNA 300 DME

SIZE	CODE IDENT. NO.	DWG NO.
C	71379	1570001

SCALE: NONE | 337 | PAGE: 2.26.3

FORM NO. 80-215A

ED & RR 01852 (SR5441) IX

REVISION			
LET	DESCRIPTION	DATE	APPD
A	BY REV: ADD P3 ; HOUSING WAS CONNECTOR ED & RR 10025 (SR 5441) IX	EGY 8-5-68	GKI MDS DKM WBH 11Mc/8mC

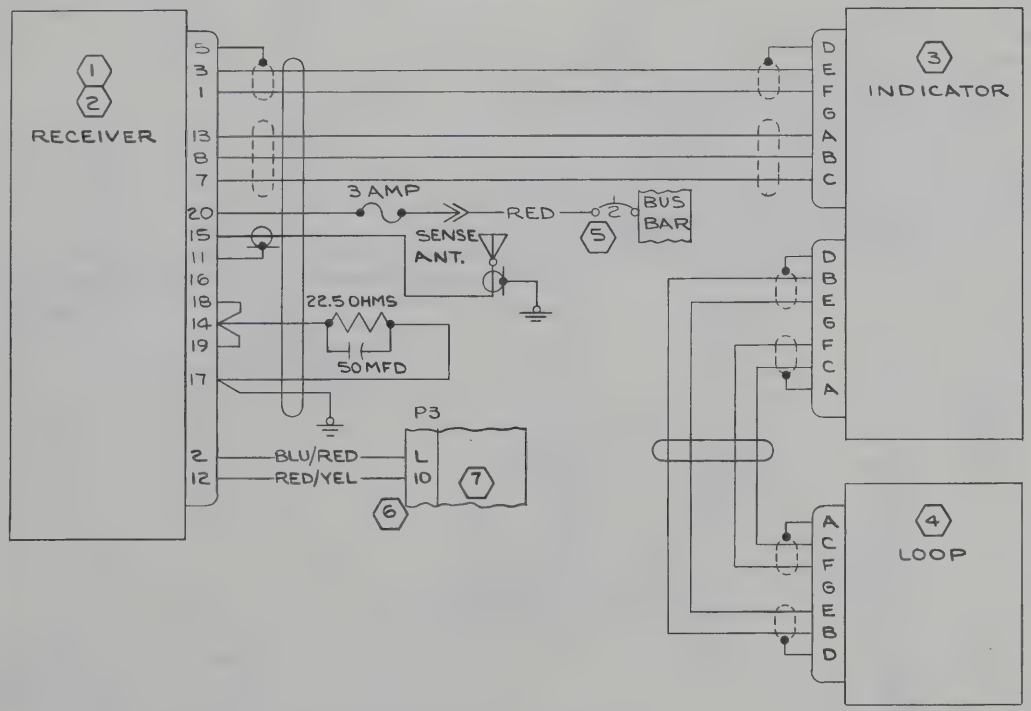

WIRE CODE NO.	GA	MATERIAL	LG	TERMINALS			SERIALS
BLU/RED	22	-22-6-2		S-1367-1-6	S-1837-1		
RED/YEL	22	-22-2-4		S-1367-1-6	S-1837-1		
RED	18	-18-2		S-1367-1-6	S-341-2		

WIRE TABLE

ITEM NO.	PART NO.	DESCRIPTION	
7	0570084-2	JCT BOX ASSY	
6	S-1838-3	HOUSING	
5	S-1360-2	CIRCUIT BREAKER	
4	32880-1100	LOOP	(ARC TYPE L-521B-10)
3	32680-0000	INDICATOR	(ARC TYPE IN-521B)
2	28340-1400	RCVR (WITH BFO)	(ARC TYPE R-521B-14)
1	28340-1500	RCVR (LESS BFO)	(ARC TYPE R-521A-12)

EQUIPMENT TABLE

CES-1000 IS APPLICABLE VENDOR CODES PER S-1400
CES-XXXX=CESSNA SPEC. NO.
S-XXX OR CMXXXX=CESSNA STD. NO.

SUPERSEDES: P 2.34

SUPERSEDED BY:

CONTRACT NO:

	NAME	DATE
DESIGN	[illegible]	5-10-68
GROUP	[illegible]	5-13-68
DRAWN	YOUNGERS	4-29-68
CHECK	G. IRWIN	5-9-68
STRESS	[illegible]	5-10-68
PROJECT	[illegible]	5-10-68
APPD	SWANEY	5-9-68

Cessna AIRCRAFT CO.
COMMERCIAL AIRCRAFT DIV.
5800 E. PAWNEE
WICHITA, KANSAS

TITLE
WIRING DIAGRAM —
CESSNA 300 ADF
(ARC TYPE R-521B)

SIZE	CODE IDENT. NO.	DWG NO.
C	71379	1570001

SCALE: NONE | 337 | PAGE: 2.34.1

FORM NO. 80-215A

ED&RR01852 (SR5441) IX

REVISION			
LET	DESCRIPTION	DATE	APPD
B	REFER TO PAGE 2.47.1		

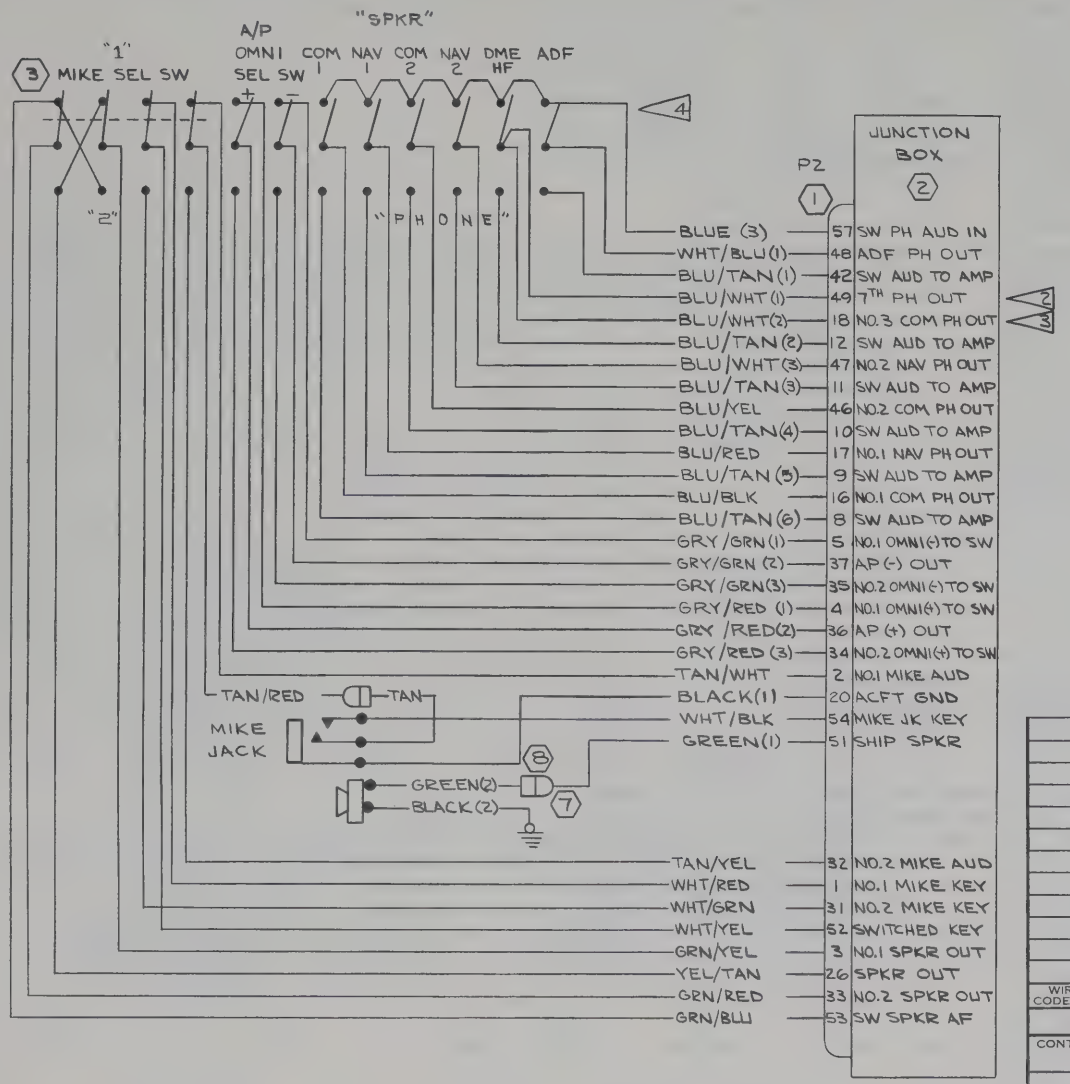

WIRE CODE NO.	GA	MATERIAL	LG	TERMINALS		SERIALS

WIRE TABLE

ITEM NO.	PART NO.	DESCRIPTION
		EQUIPMENT TABLE

CES-1000 IS APPLICABLE
VENDOR CODES PER S-1400
CES-XXXX=CESSNA SPEC. NO.
S-XXX OR CMXXXX=CESSNA STD. NO.

SUPERSEDES: P 2.47

SUPERSEDED BY:

CONTRACT NO:

	NAME	DATE
DESIGN	Whisenhunt	5-10-68
GROUP	R. Wise	5-10-68
DRAWN	YOUNGERS	4-29-68
CHECK	G. IRVIN	5-9-68
STRESS	DK McCook	5-10-68
PROJECT	[illegible]	5-10-68
APPD	SWANEY	5-9-68

Cessna AIRCRAFT CO.
COMMERCIAL AIRCRAFT DIV.
5800 E. PAWNEE
WICHITA, KANSAS

TITLE
WIRING DIAGRAM — AUDIO SYSTEM, 300 & 400 SERIES

SIZE	CODE IDENT. NO.	DWG NO.
C	71379	1570001

SCALE: NONE | 337 | PAGE: 2.47.2

FORM NO. 80-215A

ED&RR 01852 (SR5441) IX

REVISION			
LET	DESCRIPTION	DATE	APPD
B	REFER TO PAGE 2.47.1		

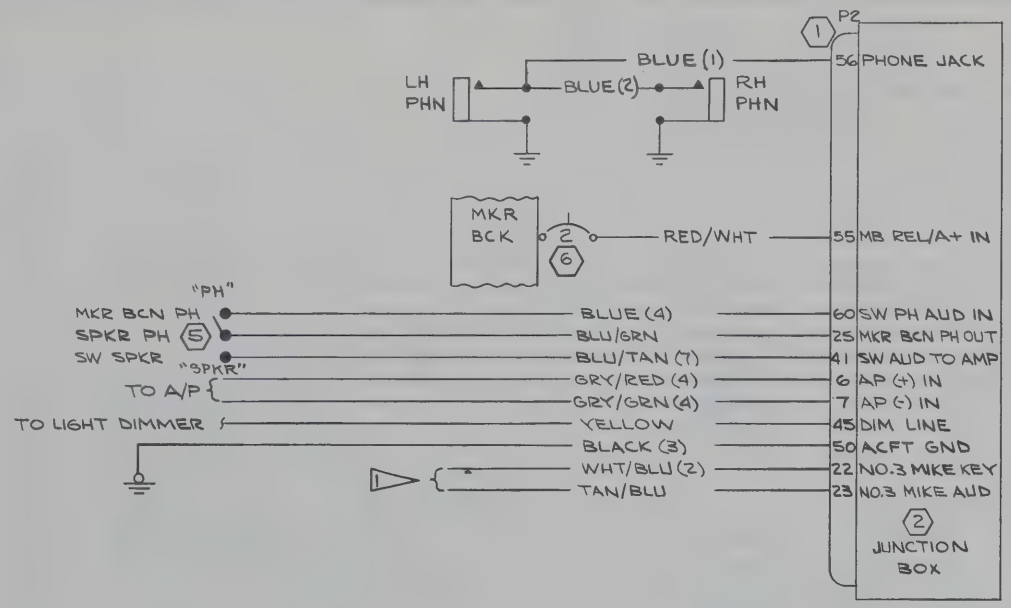

WIRE CODE NO.	GA	MATERIAL	LG	TERMINALS		SERIALS

WIRE TABLE

ITEM NO.	PART NO.	DESCRIPTION

EQUIPMENT TABLE

CES-1000 IS APPLICABLE
VENDOR CODES PER S-1400
CES-XXXX=CESSNA SPEC. NO.
S-XXX OR CMXXXX=CESSNA STD. NO.

SUPERSEDES: P 2.47

SUPERSEDED BY:

CONTRACT NO:

	NAME	DATE
DESIGN	[illegible]	5-10-68
GROUP	H. Wiso	5-10-68
DRAWN	YOUNGERS	4-29-69
CHECK	G. IRVIN	5-9-68
STRESS	DK McCook	5-10-68
PROJECT	[illegible]	5-10-68
APPD	SWANEY	5-9-68

Cessna AIRCRAFT CO.
COMMERCIAL AIRCRAFT DIV.
5800 E. PAWNEE
WICHITA, KANSAS

TITLE
WIRING DIAGRAM — AUDIO SYSTEM, 300 & 400 SERIES

SIZE	CODE IDENT. NO.	DWG NO.
C	71379	1570001

SCALE: NONE | 337 | PAGE: 2.47.3

FORM NO. 80-215A

ED&RR 01852 (SR5441) IX

SER337-0526 & ON

CHG LET	REVISION	BY / DATE	CHK / APPD
A	BY REV: R-543B WAS R-543A & TITLE WAS CESSNA GLIDESLOPE (ARC TYPE R-543A); 36440-0000 WAS 34340 (ED & RR 00952) (SR5632)	RLY 12-7-67	MDS

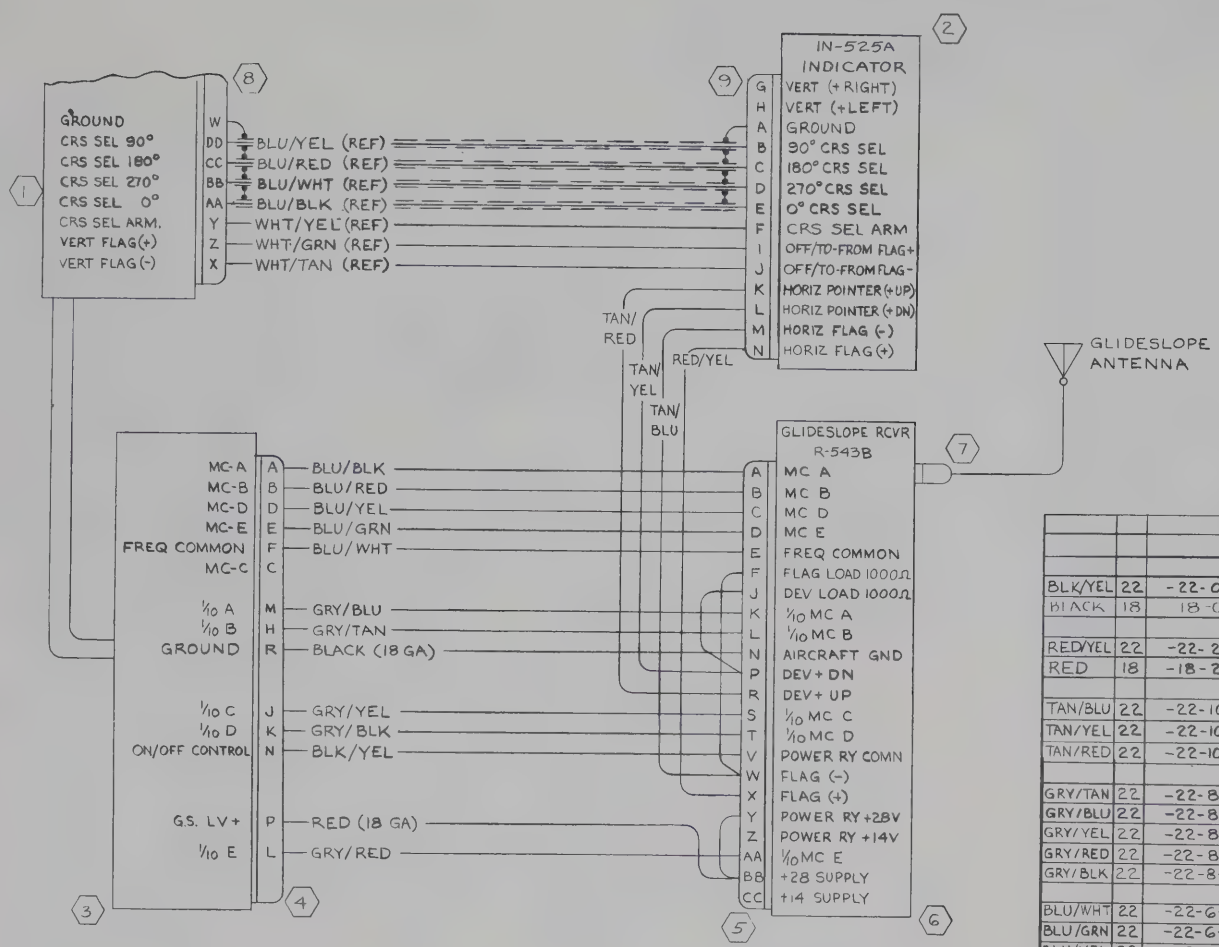

ITEM NO	PART NO.	DESCRIPTION	INSTALLED ON
9	27826	CONNECTOR	
8	29747-0026	CONNECTOR	
7	11337	CONNECTOR	
6	36440-0000	GLIDESLOPE RCVR	(ARC TYPE R-543B)
5	36194	CONNECTOR KIT	
4	36195	CONNECTOR KIT	
3	36300	CABLE HARNESS KIT	
2	32350	INDICATOR (ARC TYPE IN-525A)	
1	36150-1128	RCVR/XMTR (ARC TYPE RT515R-1)	

EQUIPMENT TABLE

WIRE CODE NO.	GA	MATERIAL	LG	TERMINALS		SERIALS
BLK/YEL	22	-22-0-4		SOLDER	SOLDER	
BLACK	18	18-0		SOLDER	SOLDER	
RED/YEL	22	-22-2-4		SOLDER	SOLDER	
RED	18	-18-2				
TAN/BLU	22	-22-10-6				
TAN/YEL	22	-22-10-4				
TAN/RED	22	-22-10-2				
GRY/TAN	22	-22-8-10				
GRY/BLU	22	-22-8-6				
GRY/YEL	22	-22-8-4				
GRY/RED	22	-22-8-2				
GRY/BLK	22	-22-8-0				
BLU/WHT	22	-22-6-9				
BLU/GRN	22	-22-6-5				
BLU/YEL	22	-22-6-4				
BLU/RED	22	-22-6-2				
BLU/BLK	22	-22-6-0		SOLDER	SOLDER	

WIRE TABLE

CESSNA AIRCRAFT CO., COMMERCIAL AIRCRAFT DIVISION WICHITA, KANSAS

	NAME	DATE
DRAWN	G WOOD	11-10-66
GROUP	H. Wiel	1 31-67
CHECK	VAKSIMW	2-1-67
PROJ		

TITLE: WIRING DIAGRAM— CESSNA 400 GLIDESLOPE (ARC TYPE R-543B)

Cessna.

DWG NO: 1570001

SUPERSEDED BY:	SUPERSEDES:	MODEL:	REV:	PAGE:
		337B	A	2.58.1

FORM NO 80-161-3

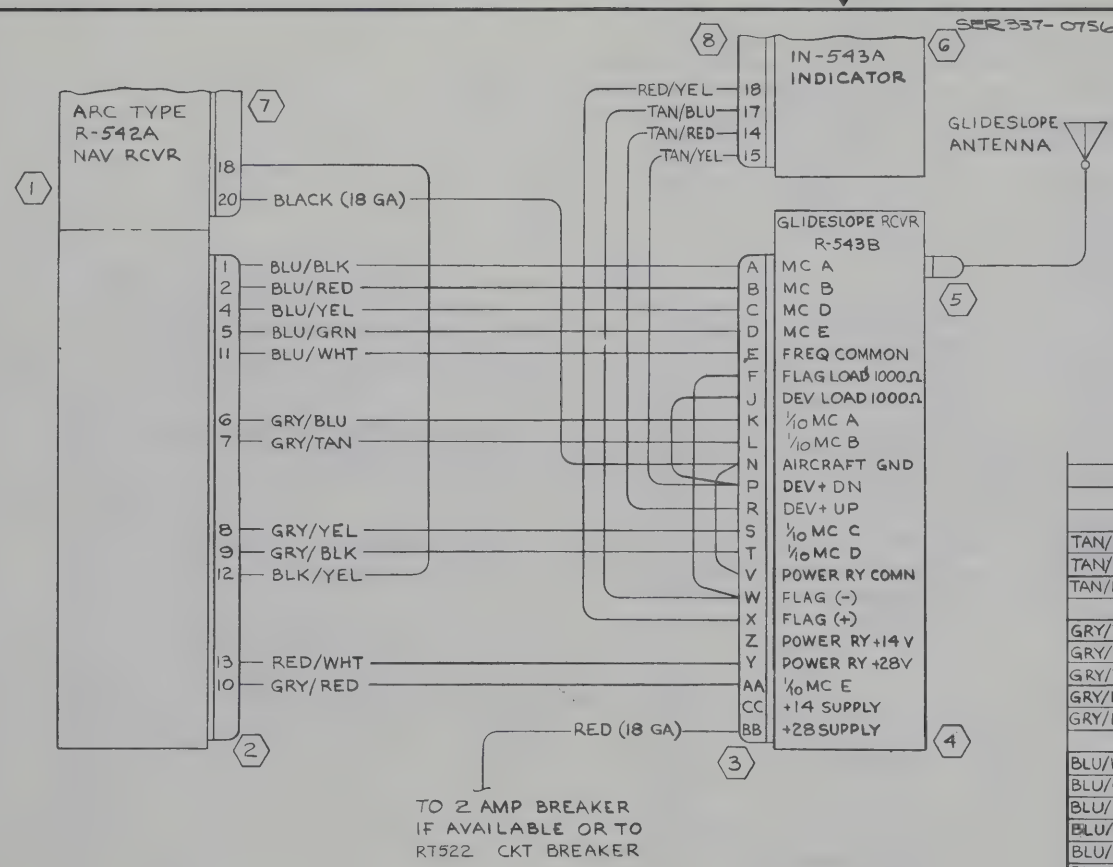

REVISIONS			
LTR	DESCRIPTION	DATE	APPROVED
A	BY REV: R-543B WAS R-543A & TITLE WAS "CESSNA GLIDESLOPE" (ARC TYPE R-543A); 36440-0000 WAS 34340 (ED & RR 00952) (SR 6632)	RLY 12-7-67	MDS DKM

WIRE CODE NO.	GA	MATERIAL	LG	TERMINALS		SERIALS
TAN/BLU	22	-22-10-6		SOLDER	SOLDER	
TAN/YEL	22	-22-10-4		SOLDER	SOLDER	
TAN/RED	22	-22-10-2		SOLDER	SOLDER	
GRY/TAN	22	-22-8-10		SOLDER	SOLDER	
GRY/BLU	22	-22-8-6		↕	↕	
GRY/YEL	22	-22-8-4		↕	↕	
GRY/RED	22	-22-8-2		↕	↕	
GRY/BLK	22	-22-8-0		SOLDER	SOLDER	
BLU/WHT	22	-22-6-9		SOLDER	SOLDER	
BLU/GRN	22	-22-6-5		↕	↕	
BLU/YEL	22	-22-6-4		↕	↕	
BLU/RED	22	-22-6-2		↕	↕	
BLU/BLK	22	-22-6-0		↕	↕	
RED/YEL	22	-22-2-4		↕	↕	
RED/WHT		-22-2-9		SOLDER	↕	
RED	18	-18-2		S-1367-1-8	SOLDER	
BLK/YEL	22	-22-0-4		SOLDER	SOLDER	
BLACK	18	-18-0		SOLDER	SOLDER	

WIRE TABLE

ITEM NO.	PART NO.	DESCRIPTION
8	34294-0425	CONNECTOR
7	35693-0004	CONNECTOR
6	34290	INDICATOR (ARC IN-543)
5	11337	CONNECTOR
4	36440-0000	G/S RCVR (ARC TYPE R543B)
3	36194	CONNECTOR KIT (ARC)
2	35548-0225	CONNECTOR (ARC)
1	33560-1000	NAV RCVR (ARC R-542)

EQUIPMENT TABLE

CONTRACT NO:

	NAME	DATE
DESIGN	G WOOD	1-9-67
GROUP	[illegible]	1-31-67
DRAWN	G WOOD	1-9-67
CHECK	YAKSHAW	2-1-67
STRESS	Steiner	2-2-67
PROJECT	[illegible]	2-9-67
APPD		

Cessna AIRCRAFT CO.
COMMERCIAL AIRCRAFT DIV.
5800 E. PAWNEE
WICHITA, KANSAS

TITLE
WIRING DIAGRAM —
CESSNA 400
GLIDESLOPE
(ARC TYPE R-543B)

SIZE	CODE IDENT. NO.	DWG NO.
C	71379	1570001

SCALE: NONE

PAGE: 2.59.1

FORM NO. 80-215

REVISION			
LET	DESCRIPTION	DATE	APPD

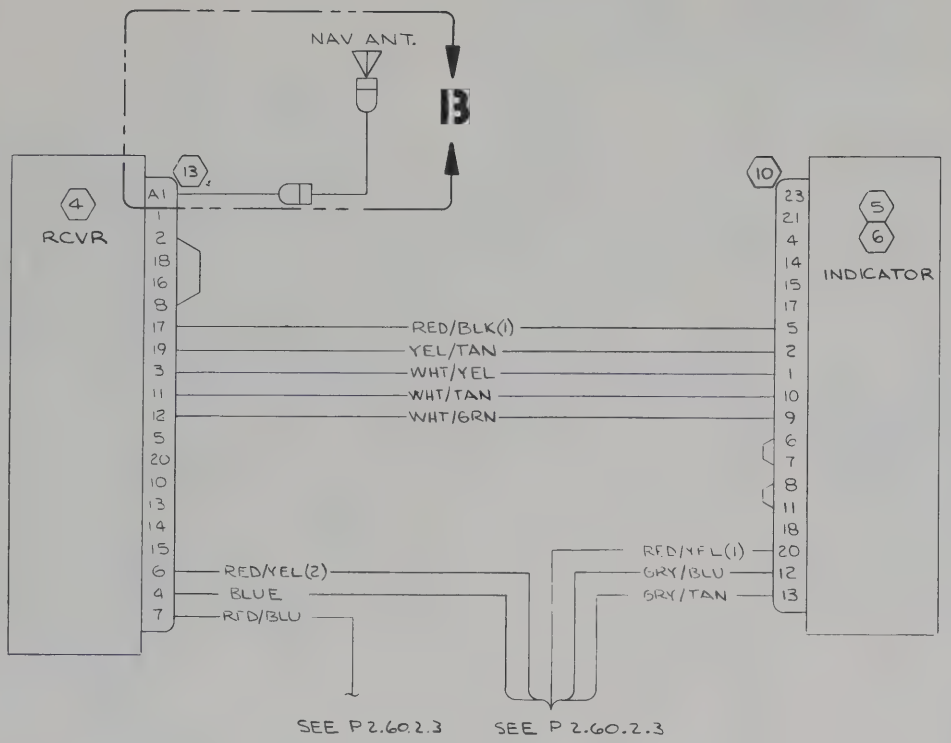

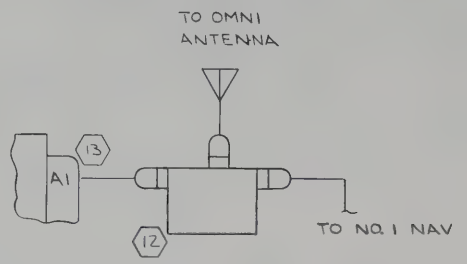

DETAIL 13
2ND INSTL

WIRE CODE NO.	GA	MATERIAL	LG	TERMINALS		SERIALS

WIRE TABLE

ITEM NO	PART NO.	DESCRIPTION

EQUIPMENT TABLE

CES-1000 IS APPLICABLE VENDOR CODES PER S-1400
CES-XXXX=CESSNA SPEC. NO.
S-XXX OR CMXXXX=CESSNA STD. NO.

SUPERSEDES: P 2.60.1.1

SUPERSEDED BY:

CONTRACT NO:

	NAME	DATE
DESIGN	[illegible]	5-10-68
GROUP	R. Wise	5-10-68
DRAWN	YOUNGERS	4-29-68
CHECK	G. IRVIN	5-9-68
STRESS	DK McCook	5-10-68
PROJECT	[illegible]	5-10-68
APPD	SWANEY	5-9-68

Cessna AIRCRAFT CO.
COMMERCIAL AIRCRAFT DIV.
5800 E. PAWNEE
WICHITA, KANSAS

TITLE
WIRING DIAGRAM —
CESSNA 400 NAV/COM
(ARC TYPE RT-522A & RT-532A)

SIZE	CODE IDENT NO.	DWG NO.
C	71379	1570001

SCALE: NONE | 337 | PAGE: 2.60.2.2

FORM NO. 80-215A

ED&RR 01852 (SR 5441) IX

REVISION			
LET	DESCRIPTION	DATE	APPD

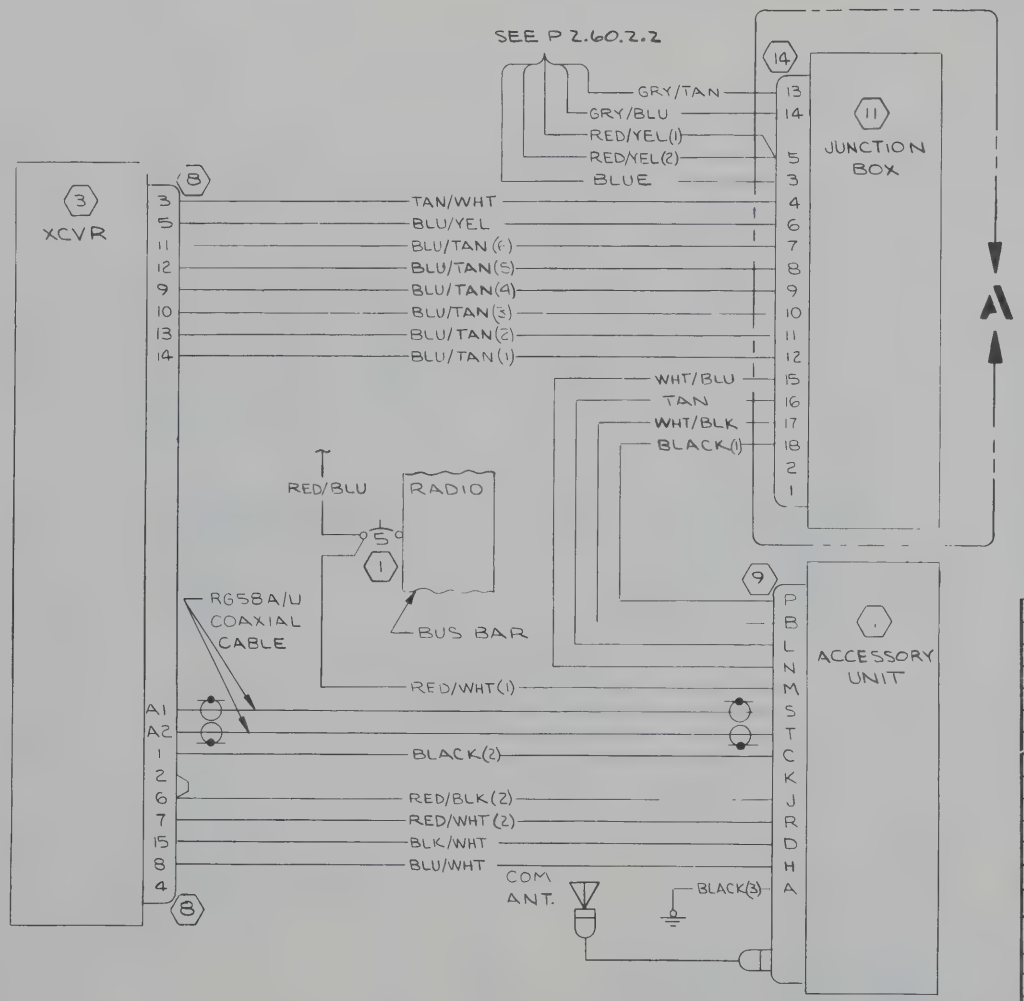

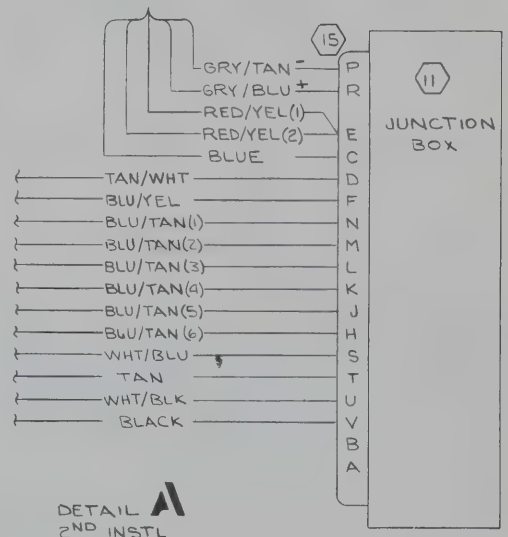

WIRE CODE NO.	GA	MATERIAL	LG	TERMINALS		SERIALS

WIRE TABLE

ITEM NO.	PART NO.	DESCRIPTION
		EQUIPMENT TABLE

CES-1000 IS APPLICABLE VENDOR CODES PER S-1400
CES-XXXX=CESSNA SPEC. NO.
S-XXX OR CMXXXX=CESSNA STD. NO.

SUPERSEDES: P 2.60.1.1

SUPERSEDED BY:

CONTRACT NO:

	NAME	DATE
DESIGN	[illegible]	5-0-68
GROUP	R. Wiss	5-10-68
DRAWN	YOUNGERS	4-29-68
CHECK	G. IRVIN	5-9-68
STRESS	[illegible]	5-10-68
PROJECT	[illegible]	5-10-68
APPD	SWAUEY	5-3-68

Cessna AIRCRAFT CO.
COMMERCIAL AIRCRAFT DIV.
5800 E. PAWNEE
WICHITA, KANSAS

TITLE
WIRING DIAGRAM —
CESSNA 400 NAV/COM
(ARC TYPE RT-522A & RT-532A)

SIZE	CODE IDENT. NO.	DWG NO.
C	71379	1570001

SCALE: NONE | 337 | PAGE 2.60.2.3

FORM NO 80-215A

ED&RR 01852 (SR5441) IX

REVISION			
LET	DESCRIPTION	DATE	APPD
A	BY REV: ADD NOTE 7 & SR. (SR5095) IX	JWH 2-30-67	
B	BY REV: 305-4304 WAS 26006 ED & RR 01336	RLL 11-20-67	DJR
C	BY REV: 1570142-1 WAS 1570142-2; ADD DETAIL A & S-1838-1 ED & RR 10025 (SR 5441) IX	EGY 8-5-68	CRI MDS

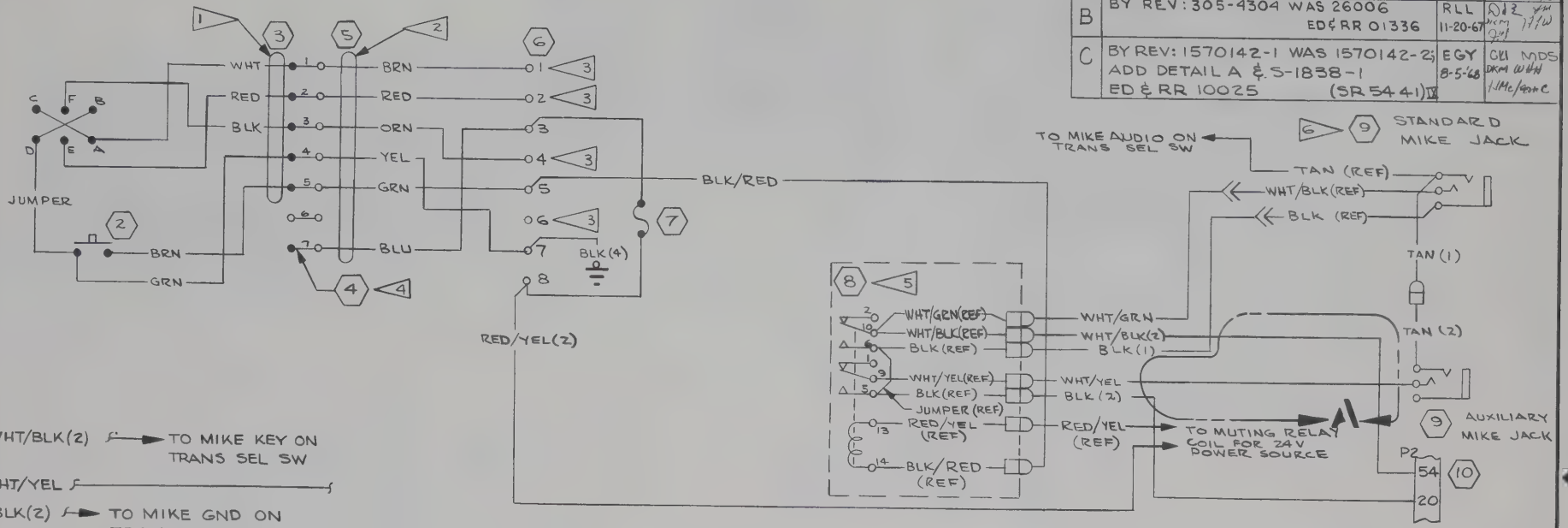

WHT/BLK(2) → TO MIKE KEY ON TRANS SEL SW

WHT/YEL

BLK(2) → TO MIKE GND ON TRAN SEL SW

DETAIL A
THUR SER 337-0978

NOTES:

1. BOTH ENDS OF (3) WIRES TO BE SOLDERED
2. BOTH ENDS OF (5) WIRES TO BE TERMINATED WITH 320733 TERMINALS (00779)
3. REFER TO 1570000 PAGE 14.6.1 FOR PITCH TRIM MOTOR WIRING DIAGRAM.
4. POWER SOURCE FOR MAP LIGHT. REFER TO 1570000 PAGE 11.10 FOR SCHEMATIC OF ETCHED CIRCUIT BOARD.
5. WIRES SOLDERED TO (8) RELAY ARE DESCRIBED ON 1570001, PAGE 2.4.6
6. WIRES SOLDER TO STD MIKE JACK ARE DESCRIBED ON 1570001, PAGE 2.0.1
7. PART NO. IS 329636, VENDOR CODE IS 00779.

ITEM NO.	PART NO.	DESCRIPTION	VENDOR
10	S-1838-1	HOUSING	
9	S-1102-1	MIKE JACK	
8	1570001-267	RELAY ASSY	
7	1570141-1	FUSE ASSY	
6	8-171	TERM BLOCK	(71785)
5	SF-1030-BX	CABLE	(08261)
4	1570142-1	CIRCUIT BOARD ASSY	
3	8445	CABLE	(70903)
2	39-1	SWITCH	(81073)
1	305-4304	SWITCH	(81579)

EQUIPMENT TABLE

CES-1000 IS APPLICABLE
VENDOR CODES PER S-1400
CES-XXXX=CESSNA SPEC. NO.
S-XXX OR CMXXXX=CESSNA STD. NO.

SUPERSEDES:
1570001 PAGE 2.5.1
1370001 PAGE 2.51.1

SUPERSEDED BY:

WIRE CODE NO.	GA	MATERIAL	LG	TERMINALS			SERIALS
BLK (3)	22	-22-0		S-1367-1	7		
RED/YEL(2)	22	-22-2-4			7		
WHT/BLK	22	-22-9-0		S-1636-1 S-1637-2			
BLK/RED	22	-22-0-2		S-1635-1 S-1637-1	7		
RED/YEL(1)	22	-22-2-4			S-1636-1 S-1637-2		
BLK(2)	22	-22-0			S-1636-1 S-1637-2		
BLK(1)	22	-22-0		S-1636-1 S-1637-1	S-1636-1 S-1637-2		
WHT/GRN	22	-22-9-5		S-1636-1 S-1637-2	S-1635-1 S-1637-1		
WHT/YEL	22	-22-9-4		SOLDER	S-1636-1 S-1637-2		
TAN (2)	22	-22-10		SOLDER	S-1636-1 S-1637-2		
TAN (1)	22	-22-10		SOLDER	S-1635-1 S-1637-1		

WIRE TABLE

CONTRACT NO:

	NAME	DATE
DESIGN	H. WISE	7-26-67
GROUP	[illegible]	8-3-67
DRAWN	J. HUSTON	8-30-67
CHECK	[illegible]	8-30-67
STRESS	[illegible]	8-31-67
PROJECT	[illegible]	8-8-67
APPD		

Cessna AIRCRAFT CO.
COMMERCIAL AIRCRAFT DIV.
5800 E. PAWNEE
WICHITA, KANSAS

TITLE
WIRING DIAGRAM — PITCH TRIM, MIKE & MAP LIGHT CONTROL WHEEL

SIZE	CODE IDENT. NO.	DWG NO.
C	71379	1570001

SCALE: NONE | 337 | PAGE: 2.61.0

FORM NO. 80-215A

(SR5095) IX

REVISION			
LET	DESCRIPTION	DATE	APPD

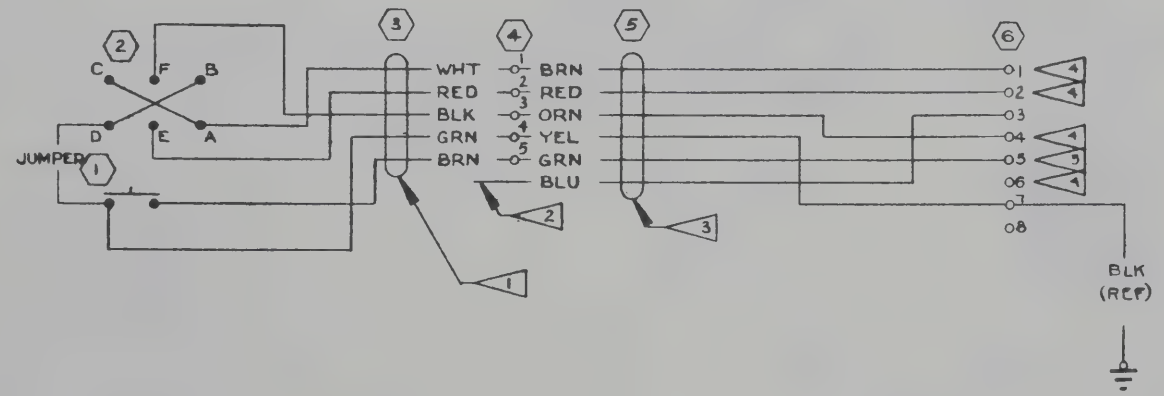

NOTES:

1. SWITCH END OF (3) WIRES TO BE SOLDERED. TERM BLOCK END TO BE TERMINATED WITH 320733 TERMINALS (00779)
2. USED ONLY WITH MAP LITE
3. BOTH ENDS OF (5) WIRES TO BE TERMINATED WITH 320733 TERMINALS (00779)
4. REFER TO 1570000 PAGE 14.6.1 FOR PITCH TRIM WIRING DIAGRAM
5. REFER TO 1570001 PAGE 2.61.0 FOR MIKE KEYING CIRCUIT WIRING DIAGRAM.

ITEM NO.	PART NO.	DESCRIPTION
6	8-171	TERM BLOCK (71785)
5	SF-1030-BX	CABLE (08261)
4	5-171	TERM BLOCK (71785)
3	8445	CABLE (70903)
2	26006	SWITCH (81579)
1	39-1	SWITCH (81073)

EQUIPMENT TABLE

WIRE CODE NO.	GA	MATERIAL	LG	TERMINALS		SERIALS

WIRE TABLE

CONTRACT NO:

	NAME	DATE
DESIGN	ACKERSON	6-8-67
GROUP	R. Wise	7-29-67
DRAWN	WEDEL	7-26-67
CHECK		
STRESS		
PROJECT		8-9-67
APPD		

Cessna AIRCRAFT CO.
COMMERCIAL AIRCRAFT DIV.
5800 E. PAWNEE
WICHITA, KANSAS

TITLE
WIRING DIAGRAM — PITCH TRIM & MIKE SWITCH CONTROL WHEEL

SIZE	CODE IDENT. NO.	DWG NO.
C	71379	1570001

SCALE: NONE
PAGE 2.61.1

CES-1000 IS APPLICABLE
VENDOR CODES PER S-1400
CES-XXXX=CESSNA SPEC. NO.
S-XXX OR CMXXXX=CESSNA STD. NO.

SUPERSEDES: 1570001 PG 2.51, 2.51.1
SUPERSEDED BY:

REVISION			
LET	DESCRIPTION	DATE	APPD

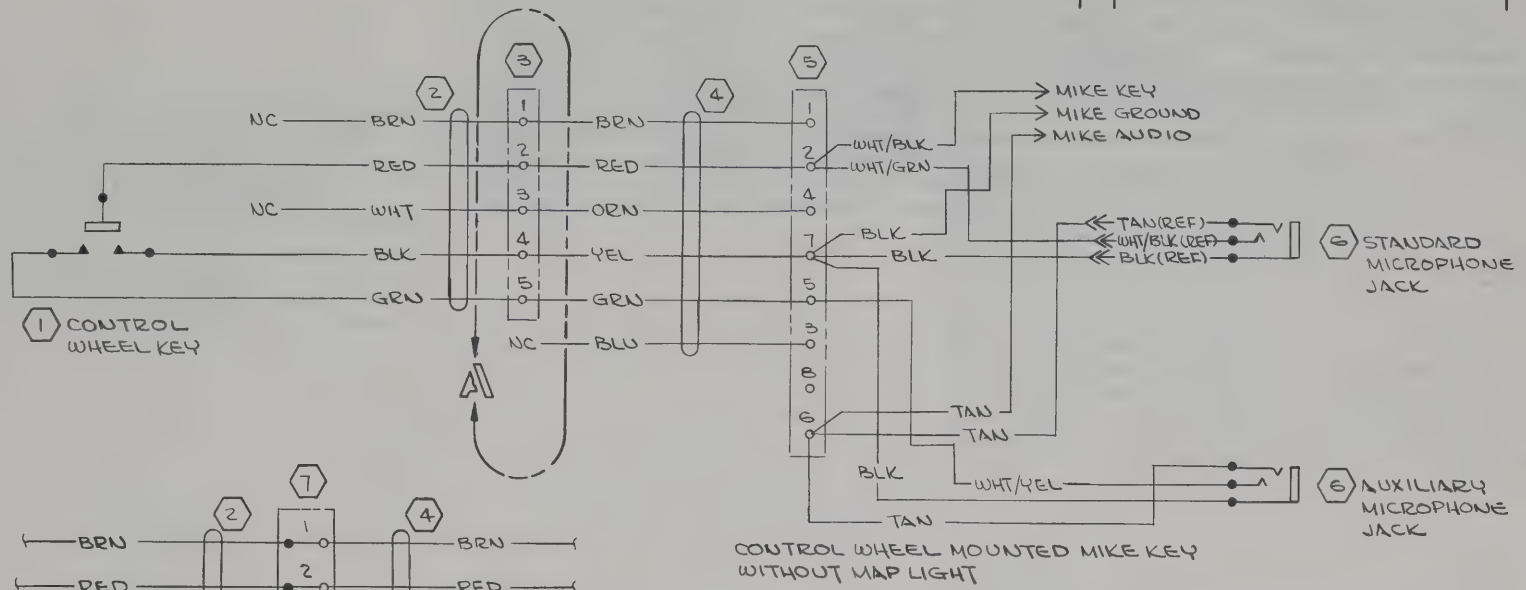

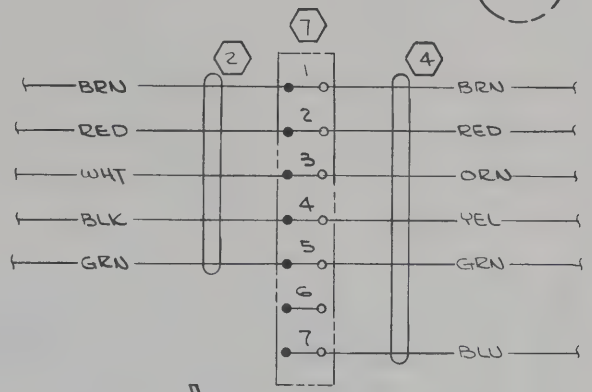

DETAIL A
CONTROL MOUNTED MIKE KEY WITH MAP LIGHT

NOTES:
1. REFER TO 1570001 PAGE 2.61.0 WHEN MIKE KEYING SWITCH IS INSTALLED IN A CONTROL WHEEL WITH AN ELECTRIC ELEVATOR TRIM SYSTEM.
2. S-171 TERMINAL BLOCK IS REPLACED BY 1570142-2 CIRCUIT BOARD WHEN MAP LIGHT IS INSTALLED.
3. 329636 TERMINAL (00779)

ITEM NO.	PART NO.	DESCRIPTION
7	1570142	MAP LIGHT
6	S-1102-1	JACK
5	8-171	TERM. BLOCK (71785)
4	SE-1030-BX	CABLE (08261)
3	S-171	TERM. BLOCK (71785)
2	8445	CABLE (70903)
1	A8002	SWITCH (HETH)

EQUIPMENT TABLE

WIRE CODE NO.	GA	MATERIAL	LG	TERMINALS	SERIALS
BLACK	22	S-1460-22-0		S-341-2	
BLACK		-22-0		3 S-341-2	
BLACK		-22-0		SOLDER	
WHT/GRN		-22-9-5		S-341-2	
WHT/BLK		-22-9-0		S-341-2	
WHT/YEL		-22-9-4		SOLDER	
TAN		-22-10		S-341-2	
TAN		-22-10		S-341-2	
TAN	22	S-1460-22-10		3 SOLDER	

WIRE TABLE

CES-1000 IS APPLICABLE VENDOR CODES PER S-1400
CES-XXXX=CESSNA SPEC. NO.
S-XXX OR CMXXXX=CESSNA STD. NO.

SUPERSEDES: 1570001 PG 2.51
SUPERSEDED BY:

CONTRACT NO:

	NAME	DATE
DESIGN	HARDEN	4-22-68
GROUP		
DRAWN	HARDEN	4-22-68
CHECK	G. IRVIN	4-24-68
STRESS	[signature]	4-25-68
PROJECT	[signature]	5-8-68
APPD	S WANEY	4-25-68

Cessna AIRCRAFT CO.
COMMERCIAL AIRCRAFT DIV.
5800 E. PAWNEE
WICHITA, KANSAS

TITLE
WIRING DIAGRAM — AUXILIARY MICROPHONE JACK & CONTROL WHEEL KEY

SIZE C | CODE IDENT. NO. 71379 | DWG NO. 1570001

SCALE: | PAGE: 2.61.3

FORM NO. 80-215A

SER 337-0756 & ON

REVISION			
LET	DESCRIPTION	DATE	APPD
A	BY REV: ADD SR'S ; PAGE 2.62 WAS 2.61.1 (SR 5095) II	JWH 8-30-67	YAK
B	BY REV: 305-4304 WAS 26006 ED & RR 01336	RLL 11-20-67	DIKM

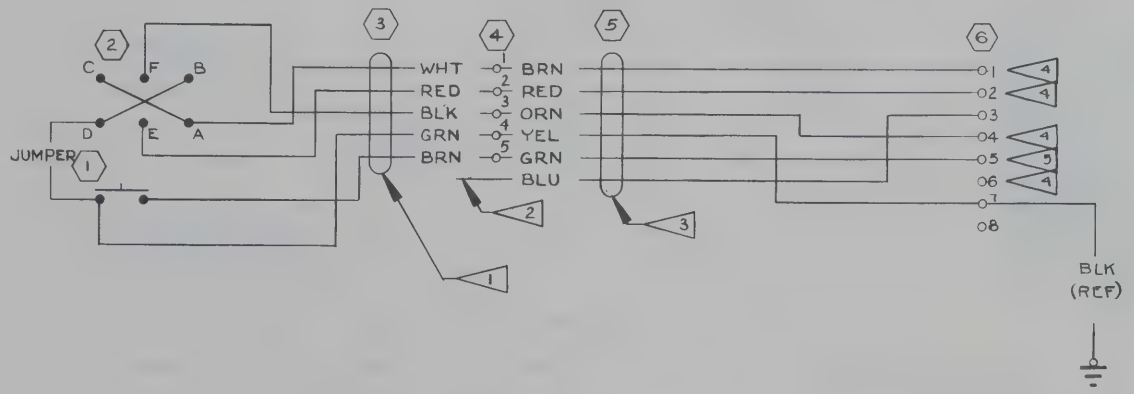

NOTES:

1. SWITCH END OF (3) WIRES TO BE SOLDERED. TERM BLOCK END TO BE TERMINATED WITH 320733 TERMINALS (00779)
2. USED ONLY WITH MAP LITE
3. BOTH ENDS OF (5) WIRES TO BE TERMINATED WITH 320733 TERMINALS (00779)
4. REFER TO 1570000 PAGE 19.6.1 FOR PITCH TRIM WIRING DIAGRAM
5. REFER TO 1570001 PAGE 2.61.0 FOR MIKE KEYING CIRCUIT WIRING DIAGRAM.

ITEM NO.	PART NO.	DESCRIPTION	VENDOR
6	8-171	TERM BLOCK	(71785)
5	SF-1030-BX	CABLE	(08261)
4	5-171	TERM BLOCK	(71785)
3	8445	CABLE	(70903)
2	305-4304	SWITCH	(81579)
1	39-1	SWITCH	(81073)

EQUIPMENT TABLE

CES-1000 IS APPLICABLE VENDOR CODES PER S-1400
CES-XXXX=CESSNA SPEC. NO.
S-XXX OR CMXXXX=CESSNA STD. NO.

SUPERSEDES: 1570001 PG 2.51 2.51.1

SUPERSEDED BY:

WIRE CODE NO.	GA	MATERIAL	LG	TERMINALS		SERIALS

WIRE TABLE

CONTRACT NO:

	NAME	DATE
DESIGN	ACKERSON	6-8-67
GROUP	H. Wise	7-29-67
DRAWN	J WEDDLE	7-26-67
CHECK	E YAKSHAW	8-30-67
STRESS	aug	8-31-67
PROJECT	W Seidel	8-9-67
APPD		

Cessna AIRCRAFT CO.
COMMERCIAL AIRCRAFT DIV.
5800 E. PAWNEE
WICHITA, KANSAS

TITLE
WIRING DIAGRAM — PITCH TRIM & MIKE SWITCH, CONTROL WHEEL

SIZE	CODE IDENT. NO.	DWG NO.
C	71379	1570001

SCALE: NONE | 337 | PAGE: 2.62

II (SR5095)

FORM NO. 80-218A

SER337-0756 & ON

REVISION			
LET	DESCRIPTION	DATE	APPD
A	BY REV: ADD 6R ; PAGE 2.63 WAS 2.61.2. (SR 5095) IX	JWH 8/30/67	YAK
B	BY REV: 305-4304 WAS 26006 ED & RR 01336	RLL 11-20-67	D.H.Z.

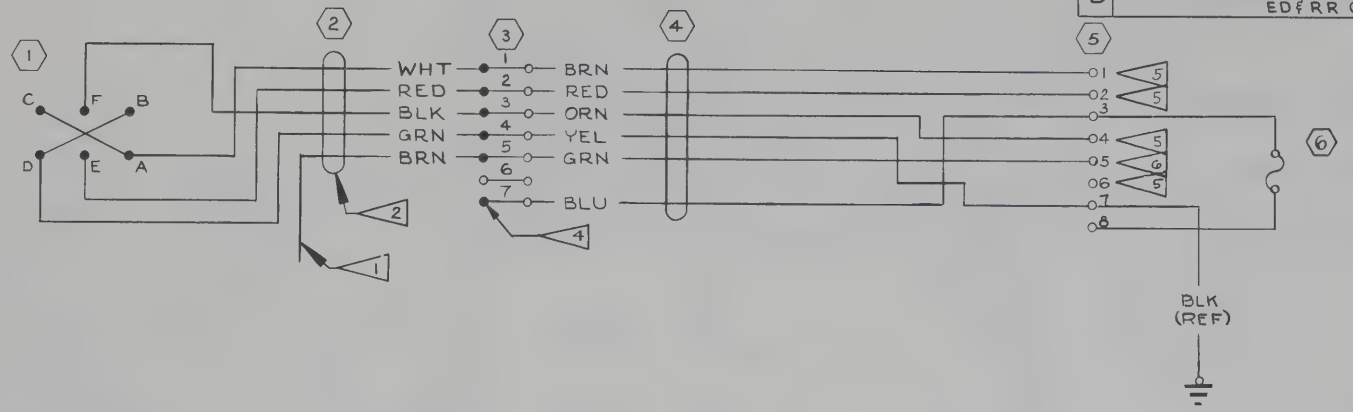

NOTES:

1. USED ONLY WITH MIKE SWITCH
2. BOTH ENDS OF (2) WIRES TO BE SOLDERED
3. BOTH ENDS OF (4) WIRES TO BE TERMINATED WITH 320733 TERMINALS (00779)
4. POWER SOURCE FOR MAP LIGHT REFER TO 1570000 PAGE 11.10 FOR SCHEMATIC OF ETCHED CIRCUIT BOARD.
5. REFER TO 1570000 PAGE 19.6.1 FOR PITCH TRIM WIRING DIAGRAM.
6. RESERVED FOR MIKE KEYING CIRCUIT REFEER TO 1570001 PAGE 2.61.0 OR 2.61.1

ITEM NO.	PART NO.	DESCRIPTION	VENDOR
6	1570141-1	FUSE ASSY	
5	8-171	TERM BLOCK	(71785)
4	SF-1030-BX	CABLE	(08261)
3	1570142-2	CIRCUIT BOARD ASSY	
2	8445	CABLE	(70903)
1	305-4304	SWITCH	(81579)

EQUIPMENT TABLE

CES-1000 IS APPLICABLE VENDOR CODES PER S-1400
CES-XXXX=CESSNA SPEC. NO.
S-XXX OR CMXXXX=CESSNA STD. NO.

SUPERSEDES:

SUPERSEDED BY:

WIRE CODE NO.	GA	MATERIAL	LG	TERMINALS		SERIALS

WIRE TABLE

CONTRACT NO:

	NAME	DATE
DESIGN	ACKERSON	6-8-67
GROUP	N. Wise	7-29-67
DRAWN	J Weddel	7-26-67
CHECK	YAKSHAW	8-30-67
STRESS		8-31-67
PROJECT		9-8-67
APPD		

Cessna AIRCRAFT CO.
COMMERCIAL AIRCRAFT DIV.
5800 E. PAWNEE
WICHITA, KANSAS

TITLE
WIRING DIAGRAM — PITCH TRIM & MAP LIGHT CONTROL WHEEL

SIZE	CODE IDENT. NO.	DWG NO.
C	71379	1570001

SCALE: NONE | 337 | PAGE: 2.63

(SR 5095)

FORM NO. 60-215A

SER 337-0756 & ON

REVISION			
LET	DESCRIPTION	DATE	APPD

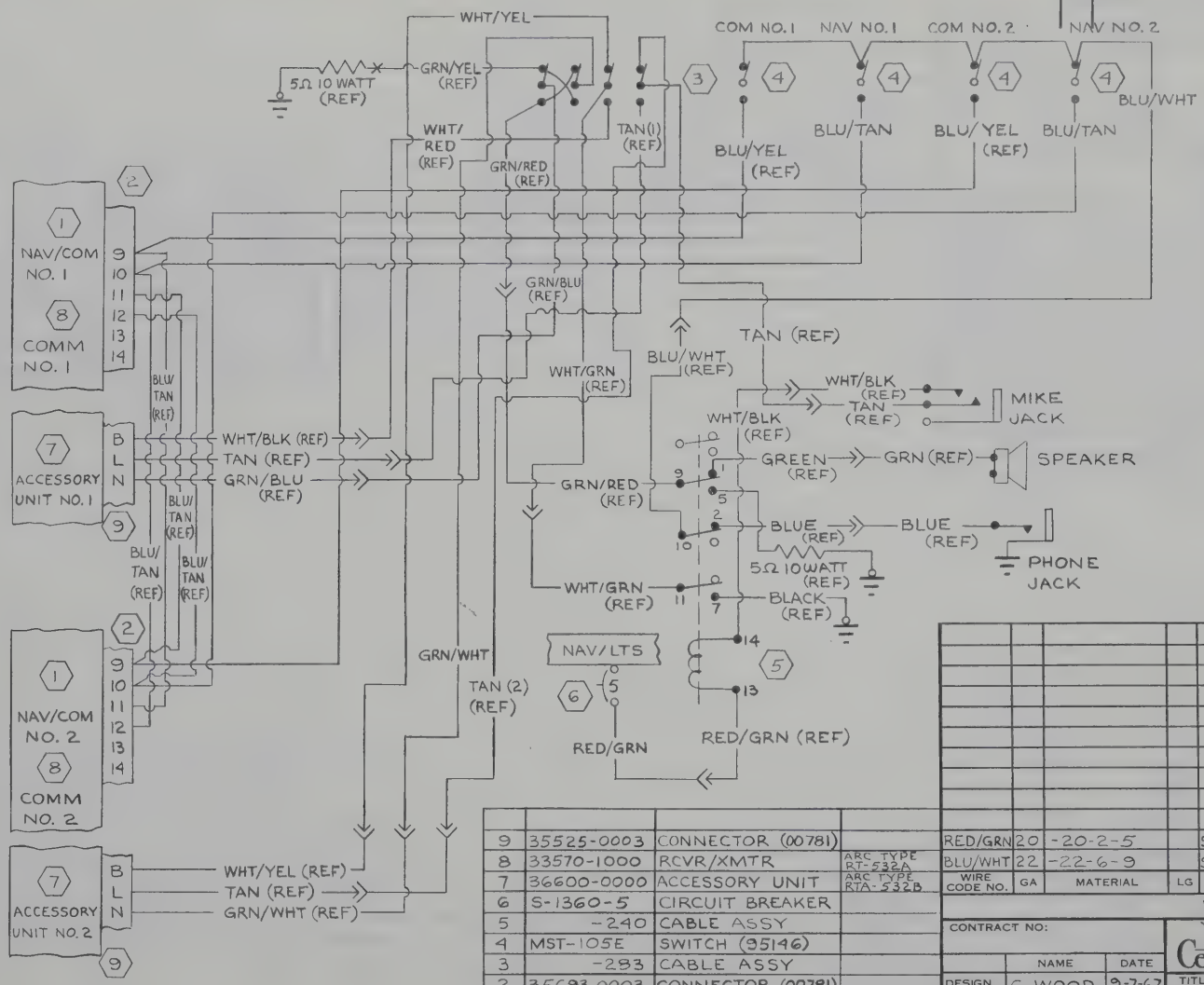

ITEM NO.	PART NO.	DESCRIPTION	
9	35525-0003	CONNECTOR (00781)	
8	33570-1000	RCVR/XMTR	ARC TYPE RT-532A
7	36600-0000	ACCESSORY UNIT	ARC TYPE RTA-532B
6	S-1360-5	CIRCUIT BREAKER	
5	-240	CABLE ASSY	
4	MST-105E	SWITCH (95146)	
3	-283	CABLE ASSY	
2	35693-0003	CONNECTOR (00781)	
1	33950-1100	RCVR/XMTR	ARC TYPE RT-522A

EQUIPMENT TABLE

WIRE CODE NO.	GA	MATERIAL	LG	TERMINALS		SERIALS
RED/GRN	20	-20-2-5		S-1367-1-6	S-341-2	
BLU/WHT	22	-22-6-9		SOLDER	S-341-2	

WIRE TABLE

CES-1000 IS APPLICABLE VENDOR CODES PER S-1400
CES-XXXX=CESSNA SPEC. NO.
S-XXX OR CMXXXX=CESSNA STD. NO.

SUPERSEDES:

SUPERSEDED BY:

CONTRACT NO:

	NAME	DATE
DESIGN	G WOOD	9-7-67
GROUP	R. Wise	9-8-67
DRAWN	G WOOD	9-7-67
CHECK	LAURIE	9-8-67
STRESS	[illegible]	9-11-67
PROJECT	[illegible]	9-15-67
APPD		

Cessna AIRCRAFT CO.
COMMERCIAL AIRCRAFT DIV.
5800 E. PAWNEE
WICHITA, KANSAS

TITLE
WIRING DIAGRAM—
AUDIO SYSTEM-DUAL 400
NAV/COM & 400 COM
(ARC TYPE 522A & 532A)

SIZE	CODE IDENT. NO.	DWG NO.
C	71379	1570001

SCALE:

PAGE: 2.69.0

FORM NO. 80-215A

NOTES:

1. PLUG P1 OF 0570084-2 JCT BOX ASSY

REVISION			
LET	DESCRIPTION	DATE	APPD
A	BY REV: ADD NOTE 1; 1 WAS 31, 31 WAS 1, 22 WAS 52, 52 WAS 22, 2 WAS 32, 32 WAS 2, 23 WAS 53 ED&RR10025 (SR5441) IX	EGY 8-5-68	GLI MDS DKM WHH 11/Mc/mic

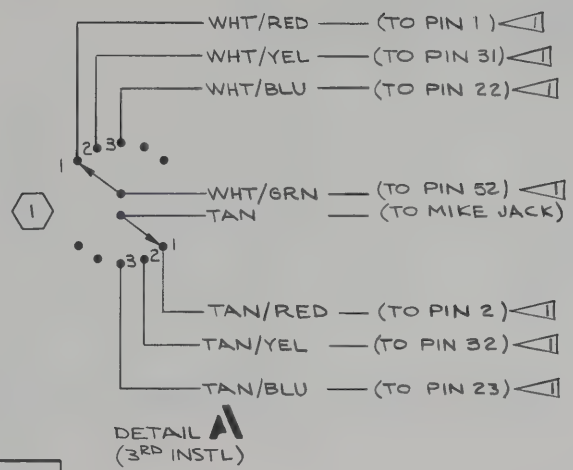

DETAIL A
(3RD INSTL)

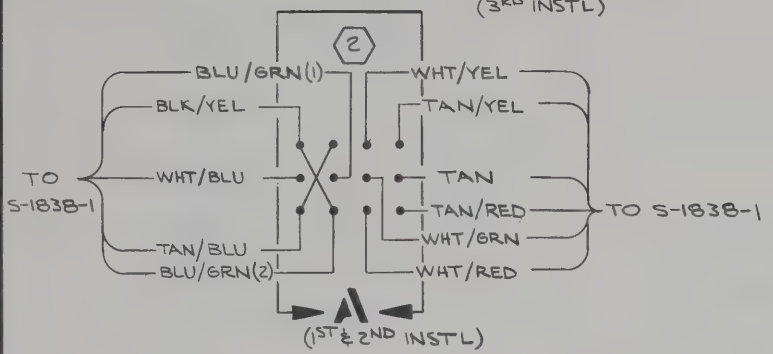

A
(1ST & 2ND INSTL)

WIRE CODE NO.	GA	MATERIAL	LG	TERMINALS			SERIALS
BLK/YEL	22	-22-0-4		SOLDER	S-1837-1		
BLU/GRN(1)	22	-22-6-5		SOLDER	S-1837-1		
BLU/GRN(2)	22	-22-6-5		SOLDER	S-1837-1		
TAN/BLU	22	-22-10-6		SOLDER	S-1837-1		
TAN/YEL	22	-22-10-4					
TAN/RED	22	-22-10-2					
TAN	22	-22-10					
WHT/GRN	22	-22-9-5					
WHT/BLU	22	-22-9-6					
WHT/YEL	22	-22-9-4					
WHT/RED	22	-22-9-2		SOLDER	S-1837-1		

WIRE TABLE

ITEM NO.	PART NO.	DESCRIPTION
2	S-1697-1	SWITCH
1	MRA-2-5	SWITCH (95146)

EQUIPMENT TABLE

CES-1000 IS APPLICABLE
VENDOR CODES PER S-1400
CES-XXXX=CESSNA SPEC. NO.
S-XXX OR CMXXXX=CESSNA STD. NO.

SUPERSEDES: P 2.66.1

SUPERSEDED BY:

CONTRACT NO:

	NAME	DATE
DESIGN	[illegible]	5-10-68
GROUP	R. Wiel	5-10-68
DRAWN	YOUNGERS	4-29-69
CHECK	G. IRVIN	5-9-68
STRESS	DK M Cook	5-10-68
PROJECT	[illegible]	5-10-68
APPD	SWANEY	5-3-68

Cessna AIRCRAFT CO.
COMMERCIAL AIRCRAFT DIV.
5800 E. PAWNEE
WICHITA, KANSAS

TITLE
WIRING DIAGRAM — SELECTOR SWITCH — TRANSMITTER

SIZE	CODE IDENT. NO.	DWG NO.
C	71379	1570001

SCALE: NONE | 337 | PAGE: 2.66.2

FORM NO. 80-215A

ED&RR 01852 (SR5441). IX

REVISION			
LET	DESCRIPTION	DATE	APPD

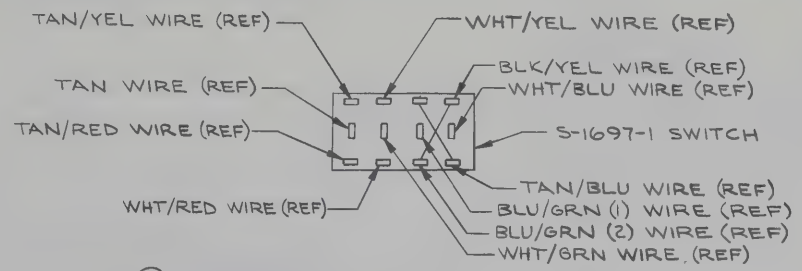

(295) CABLE ASSY - TRANSMITTER SELECTOR SW (1ST & 2ND INSTL)

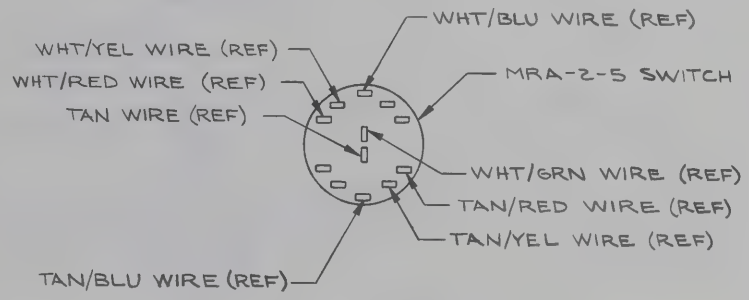

(296) CABLE ASSY - TRANSMITTER SELECTOR SW (3RD INSTL)

NO. REQD/NEXT ASSY	EFFECTIVE SERIALS	PAGE	PART NUMBER	DESCRIPTION
A/R A/R		2.66.2		WIRING
1			MRA-2-5	SWITCH (95146)
	1		S-1697-1	SWITCH
			-296	CABLE ASSY
			-295	CABLE ASSY
296 295				

LIST OF MATERIAL

DO NOT SCALE PRINT
BREAK ALL SHARP EDGES
A/R = AS REQD
CES-XXXX=CESSNA SPEC. NO.
S-XXX OR CMXXXX=CESSNA STD. NO.
$=APPROX EQUAL SPACES
CES-1000 IS APPLICABLE
VENDOR CODES PER S-1400

UNLESS OTHERWISE SPECIFIED
DIMENSIONS ARE IN INCHES
TOLERANCES ARE
DECIMALS: .00 ±.03, .000 ±.010 | ANGLES: MACH ±0 30' | FORMED ±2'
FOR HOLES, CSINKS, ETC., SEE CES 1012
FOR BASIC CODES SEE NAS 523
BJ-MS20470AD | BB-MS20426AD

SUPERSEDES: P 2.66.0
SUPERSEDED BY:

CONTRACT NO:

	NAME	DATE
DESIGN	W. Dickerson	5-10-68
GROUP	N. Wise	5-10-68
DRAWN	YOUNGERS	4-29-68
CHECK	C. IRVIN	5-9-68
STRESS	O K M York	5-10-68
PROJECT		
APPD	SWANEY	5-9-68

Cessna AIRCRAFT CO.
COMMERCIAL AIRCRAFT DIV.
5800 E. PAWNEE
WICHITA, KANSAS

TITLE: CABLE ASSY—TRANSMITTER SELECTOR SWITCH

SIZE: C | CODE IDENT. NO.: 71379 | 1570001

SCALE: NONE | 337 | PAGE: 2.66.3

FORM NO. 80-221

ED&RR 01852 (SR5441) IX

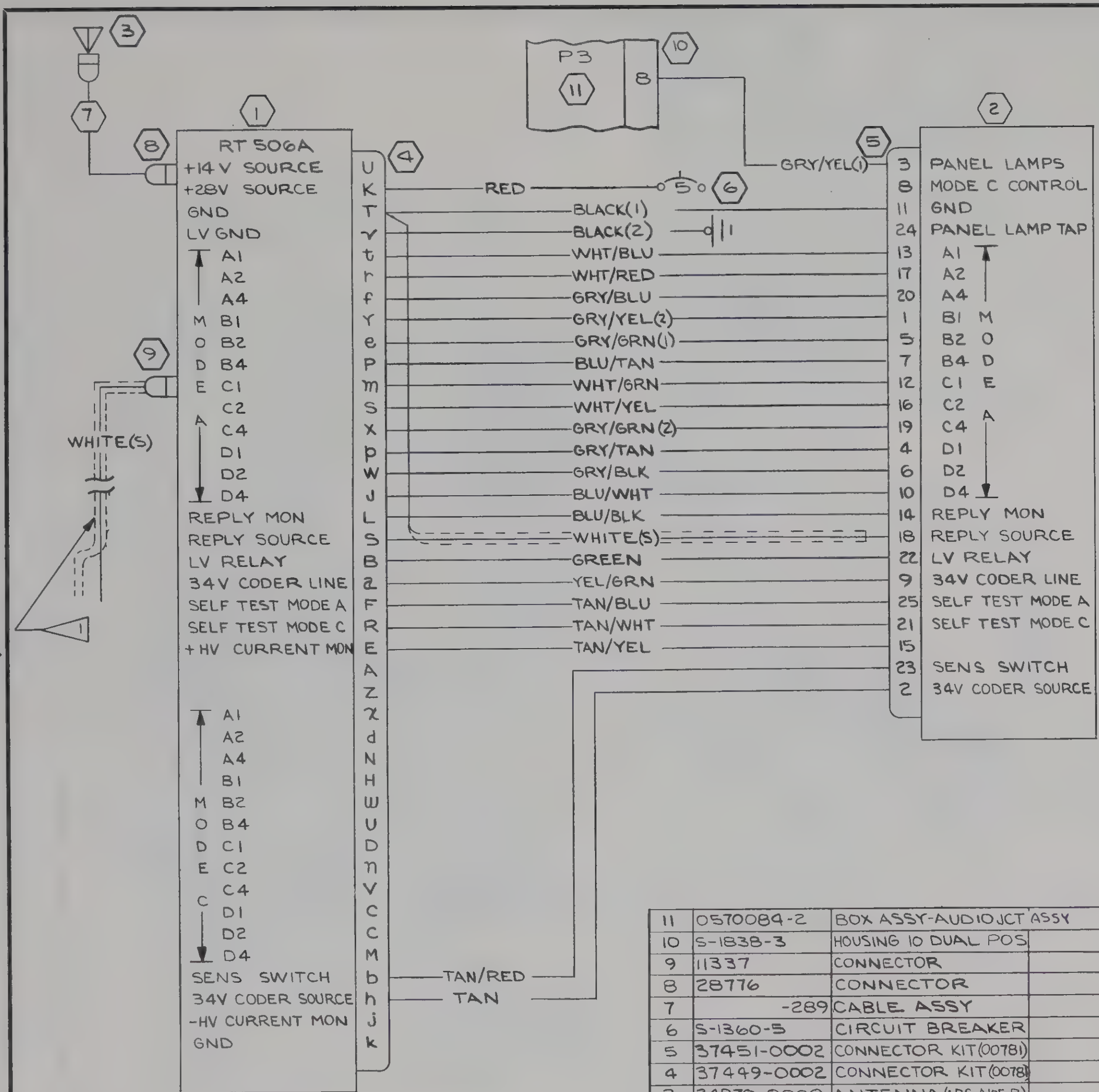

LET	DESCRIPTION	DATE	APPD
A	BY REV: v WAS V, p WAS P, h WAS H ED & RR10025 (SR5441) IX	EGY 8-5-68	GKI DKM MDS WdH HMc/Bmc

REVISION

WIRE CODE NO.	GA	MATERIAL	LG	TERMINALS		SERIALS
GRY/GRN(1)	22	-22-8-5		SOLDER	SOLDER	
TAN/YEL	22	-22-10-4		SOLDER	SOLDER	
WHITE	20(S)	S-1461-20-9		UG-88C/U	1	
TAN/WHT	22	-22-10-9		SOLDER	SOLDER	
TAN/BLU	22	-22-10-6				
TAN/RED	22	-22-10-2				
TAN	22	-22-10				
WHT/BLU	22	-22-9-6				
WHT/GRN	22	-22-9-5				
WHT/YEL	22	-22-9-4				
WHT/RED	22	-22-9-2				
GRY/TAN	22	-22-8-10				
GRY/BLU	22	-22-8-6				
GRY/GRN(2)	22	-22-8-5				
GRY/YEL(2)	22	-22-8-4		SOLDER	SOLDER	
GRY/BLK	22	-22-8-0		SOLDER	SOLDER	
BLU/TAN	22	-22-6-10				
BLU/WHT	22	-22-6-9				
WHITE	20(S)	S-1461-20-9				
BLU/BLK	22	-22-6-0				
YEL/GRN	20	-20-4-5				
GREEN	20	-20-5			SOLDER	
GRY/YEL(1)	22	-22-8-4			S-1837-1	
RED	18	-18-2			S-1367-2-8	
BLACK(2)	18	-18-0			S-1367-2-8	
BLACK(1)	22	-22-0		SOLDER	SOLDER	

WIRE TABLE

ITEM NO.	PART NO.	DESCRIPTION	
11	0570084-2	BOX ASSY-AUDIO JCT ASSY	
10	S-1838-3	HOUSING 10 DUAL POS	
9	11337	CONNECTOR	
8	28776	CONNECTOR	
7	-289	CABLE ASSY	
6	S-1360-5	CIRCUIT BREAKER	
5	37451-0002	CONNECTOR KIT (0078)	
4	37449-0002	CONNECTOR KIT (0078)	
3	34970-0000	ANTENNA (ARC A105B)	
2	34960-1000	CONTROL UNIT	
1	34950-0014	RCVR/XMTR (ARC RT506A)	

EQUIPMENT TABLE

CES-1000 IS APPLICABLE
VENDOR CODES PER S-1400
CES-XXXX=CESSNA SPEC. NO.
S-XXX OR CMXXXX=CESSNA STD. NO.

SUPERSEDES: P 2.69.1

SUPERSEDED BY:

NOTES:

1. SUPRESSOR CABLE ROUTES WITH CABLE TO CONTROL PANEL. CENTER CONDUCTOR CONNECTS TO PIN 4 OF 300 DME CABLE & SHIELD CONNECTS TO PIN 8. CENTER CONDUCTOR TERMINATED WITH END CAP WHEN NOT USED

CONTRACT NO:

	NAME	DATE
DESIGN	ww/Wilkerson	5-10-68
GROUP	K. Wise	5-10-68
DRAWN	YOUNGERS	4-29-68
CHECK	G. IRVIN	5-9-68
STRESS	DKM McCook	5-10-68
PROJECT	JR Sattler	5-10-68
APPD	SWANEY	5-9-68

Cessna AIRCRAFT CO.
COMMERCIAL AIRCRAFT DIV.
5800 E. PAWNEE
WICHITA, KANSAS

TITLE
WIRING DIAGRAM — CESSNA 400 TRANSPONDER (ARC TYPE 506A)

SIZE C | CODE IDENT. NO. 71379 | DWG NO. 1570001

SCALE: NONE | 337 | PAGE: 2.69.3

ED&RR 01852 (SR5441) IX

FORM NO. 80-215A

REVISION			
LET	DESCRIPTION	DATE	APPD

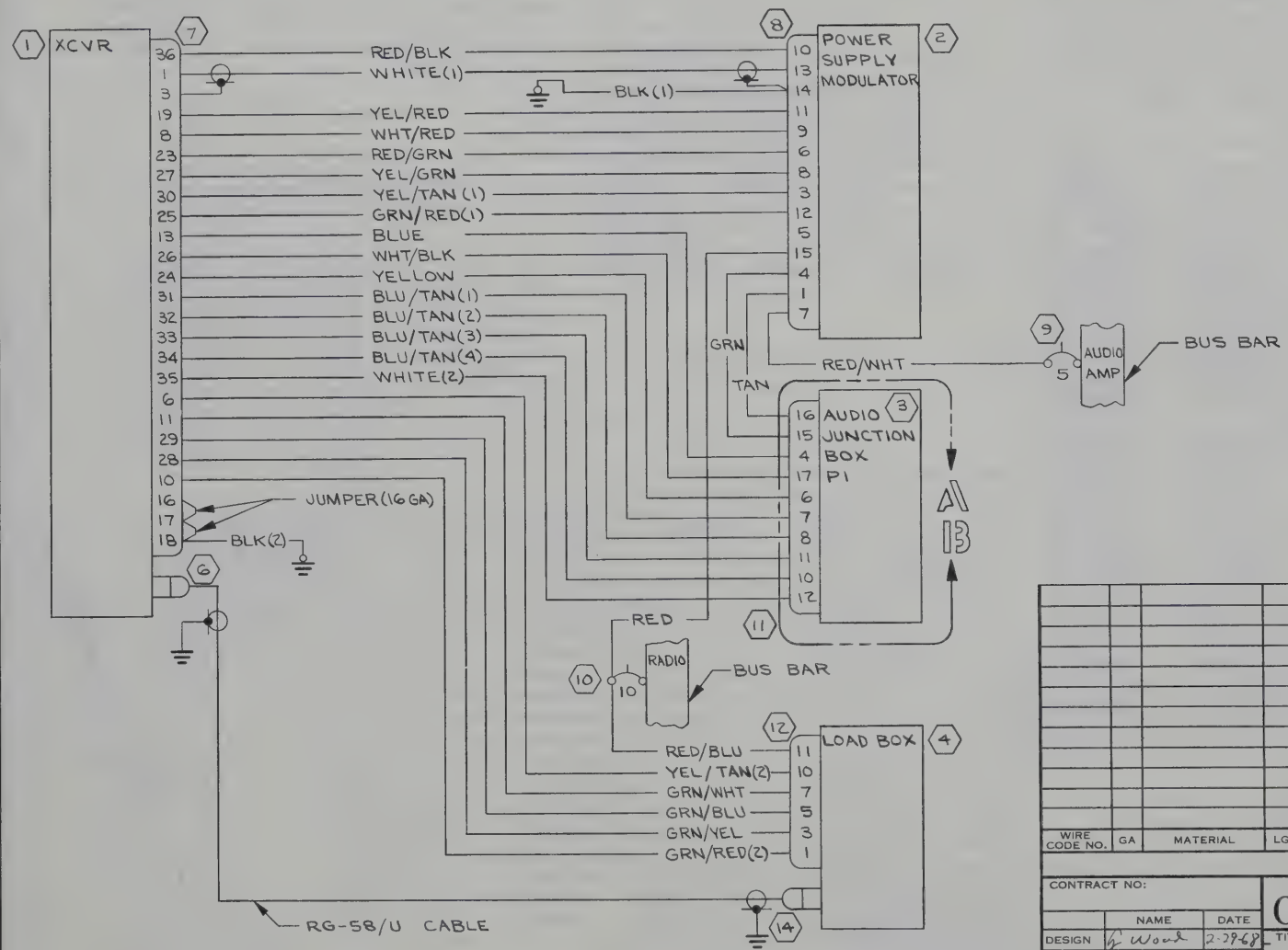

WIRE CODE NO.	GA	MATERIAL	LG	TERMINALS			SERIALS

WIRE TABLE

ITEM NO.	PART NO.	DESCRIPTION
	EQUIPMENT TABLE	

CES-1000 IS APPLICABLE
VENDOR CODES PER S-1400
CES-XXXX=CESSNA SPEC. NO.
S-XXX OR CMXXXX=CESSNA STD. NO.

SUPERSEDES:

SUPERSEDED BY:

CONTRACT NO:

	NAME	DATE
DESIGN	G. Wood	2-29-68
GROUP	H. Wise	2-21-68
DRAWN	C.GARCIA	2-15-68
CHECK	L.AURIE RRS	2-17-68
STRESS	DK McCosh	2-20-68
PROJECT	M Sattler	3-5-68
APPD	JSM	2 20 68

Cessna AIRCRAFT CO.
COMMERCIAL AIRCRAFT DIV.
5800 E. PAWNEE
WICHITA, KANSAS

TITLE
WIRING DIAGRAM — CESSNA 300 HF

SIZE	CODE IDENT. NO.	DWG NO.
C	71379	1570001

SCALE: NONE | 337 | PAGE: 2.71.1.1

FORM NO. 80-215A

ED&RR 01820 (SR 5441) IX

REVISION			
LET	DESCRIPTION	DATE	APPD

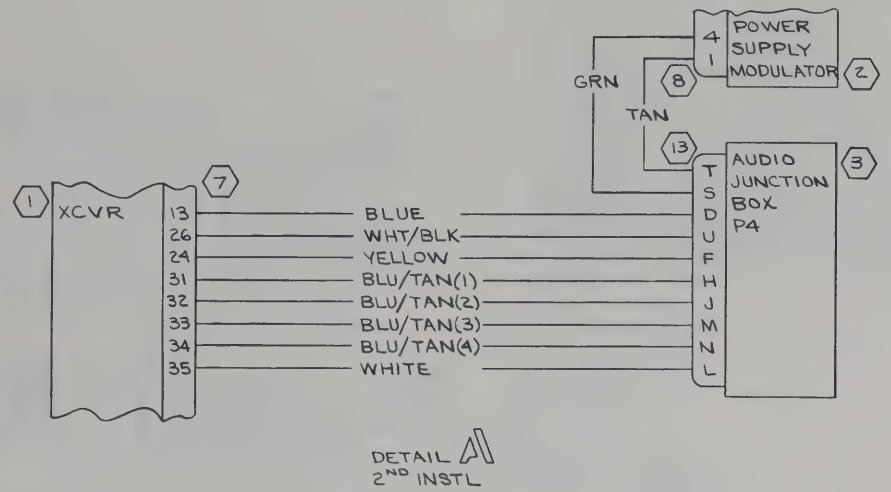

DETAIL A1
2ND INSTL

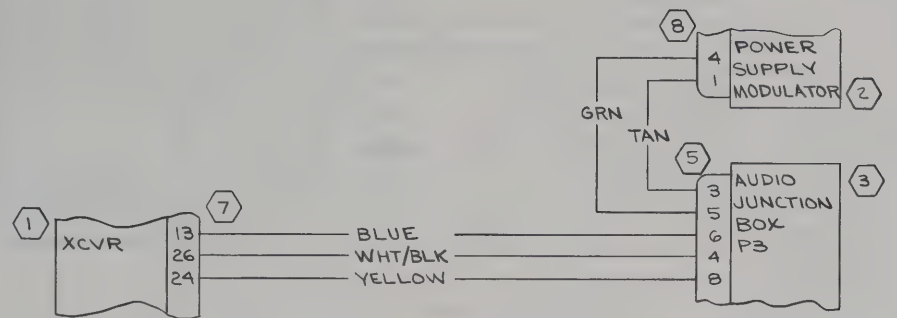

DETAIL B3
3RD INSTL
(BLU/TAN WIRES TO BE CAPPED ON 3RD INSTL)

WIRE CODE NO.	GA	MATERIAL	LG	TERMINALS		SERIALS

WIRE TABLE

ITEM NO.	PART NO.	DESCRIPTION

EQUIPMENT TABLE

CES-1000 IS APPLICABLE VENDOR CODES PER S-1400
CES-XXXX=CESSNA SPEC. NO.
S-XXX OR CMXXXX=CESSNA STD. NO.

SUPERSEDES:

SUPERSEDED BY:

CONTRACT NO:

	NAME	DATE
DESIGN	G. Wood	2-29-68
GROUP	A. Wino	2-21-68
DRAWN	C. GARCIA	2-15-68
CHECK	LAURIE. ERS	2-17-68
STRESS	DK McCook	2-20-68
PROJECT	M Sattler	3-6-68
APPD		

Cessna AIRCRAFT CO.
COMMERCIAL AIRCRAFT DIV.
5800 E. PAWNEE
WICHITA, KANSAS

TITLE
WIRING DIAGRAM—
CESSNA 300 HF

SIZE	CODE IDENT. NO.	DWG NO.
C	71379	1570001

SCALE: NONE | 337 | PAGE: 2.71.1.2

FORM NO. 80-215A

ED/RR 01820 (SR5441) IX

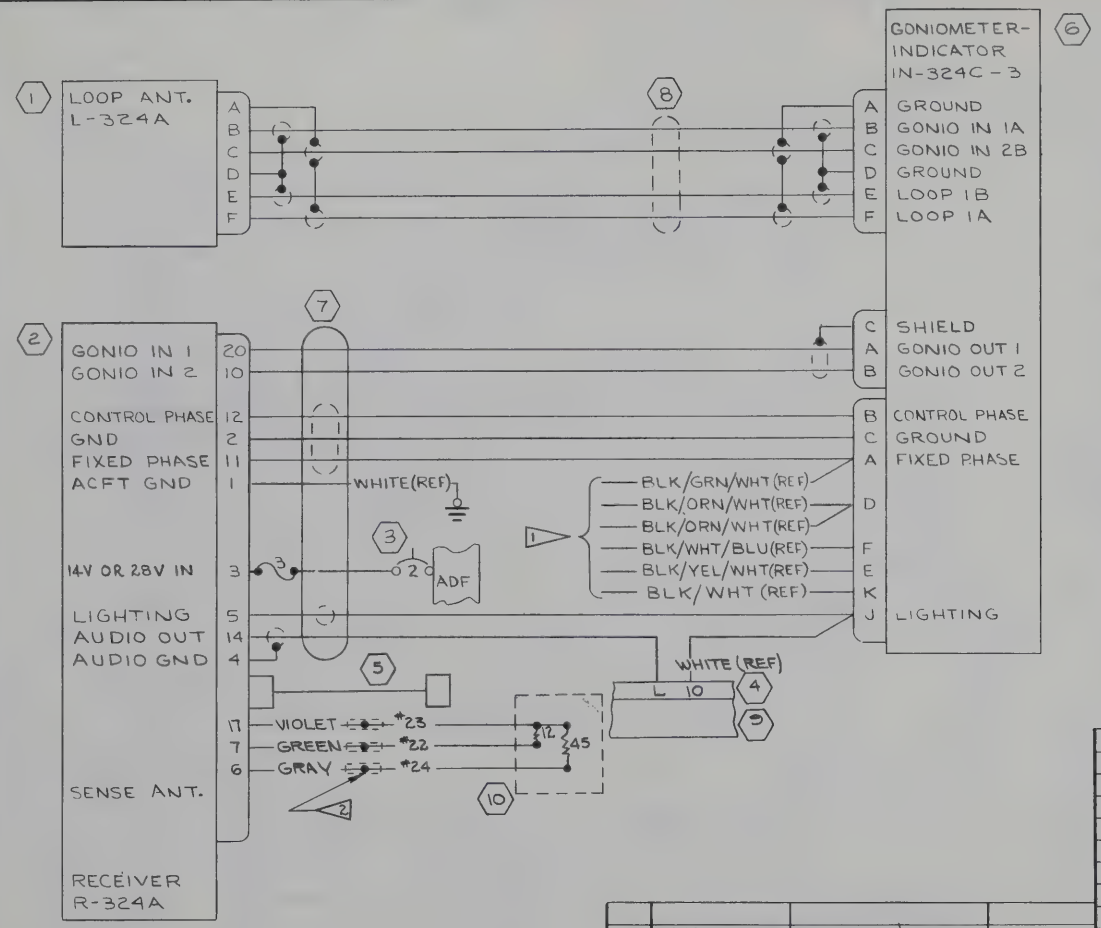

REVISION			
LET	DESCRIPTION	DATE	APPD
A	BY REV: S-1360-2 WAS S-1367-3; ADD NOTE 1; CHG PICTURE TO SHOW 3A FUSE ED & RR 10116	RRS 9-10-68	RCA MDS DKM NMC JDH 7/1/68
B	BY REV: ADD 38422-0028 & NOTE 2 ED & RR10151 (SER337-0979 & ON)	FER 9-30-68	JWH MDS DKM HLW NMC

NOTES:

1. THESE WIRES TO BE CUT & CAPPED APPROX 2.00 FROM PLUG WHEN IN 324 IS USED
2. THESE ARE SOLDERED CONNECTIONS COVERED WITH HEAT SHRINK TUBING

ITEM NO	PART NO.	DESCRIPTION	VENDOR
10	38422-0028	CABLE ASSY & RES BOX	
9	0570084-2	JUNCTION BOX ASSY	
8	33827-0000	LOOP CABLE ASSY	(00781)
7	38422-0028	CABLE ASSY	(00781)
6	38450-0003	GONIOMETER IND	(00781)
5	1570001-2008	CABLE ASSY	
4	S-1838-3	HOUSING	
3	S-1360-2	CIRCUIT BKR	
2	36380-1000	RECEIVER	(00781)
1	36420-1100	LOOP ANT.	(00781)

EQUIPMENT TABLE

WIRE CODE NO.	GA.	MATERIAL	LG	TERMINALS		SERIALS

WIRE TABLE

CES-1000 IS APPLICABLE
VENDOR CODES PER S-1400
CES-XXXX=CESSNA SPEC. NO.
S-XXX OR CMXXXX=CESSNA STD. NO.

SUPERSEDES:

SUPERSEDED BY:

CONTRACT NO:

	NAME	DATE
DESIGN	[illegible]	5-1-68
GROUP	H. Wise	5-17-68
DRAWN	C. GARCIA	5-6-68
CHECK	G IRVIN	5-9-68
STRESS	[illegible]	5-13-68
PROJECT	[illegible]	[illegible]
APPD	SWANE	5-10-68

Cessna AIRCRAFT CO.
COMMERCIAL AIRCRAFT DIV.
5800 E. PAWNEE
WICHITA, KANSAS

TITLE
WIRING DIAGRAM — CESSNA 400 ADF (ARC TYPE 324A)

SIZE	CODE IDENT. NO.	DWG NO.
C	71379	1570001

SCALE: NONE | 337 | PAGE: 2.72.1

FORM NO. 80-215A

ED & RR 02335 (SR5441) IX

NOTES:

1. SWITCHES SHOWN WITH KEYWAY AT TOP
2. ALL WIRES ARE REFERENCED

REVISION			
LET	DESCRIPTION	DATE	APPD
A	BY REV: REVISED & REDRAWN, ADD -2017, -2018 & -2019; S-1695-1 WAS S-1695-2, BLU/RED WAS BLU/BLK WHT/BLU WAS BLU/BLK & BLU/WHT WAS BLU/BLK ED&RR 24024&10147, (SR5441) IX	JWH 9/20/68	GKI MDS DKM RW HMC

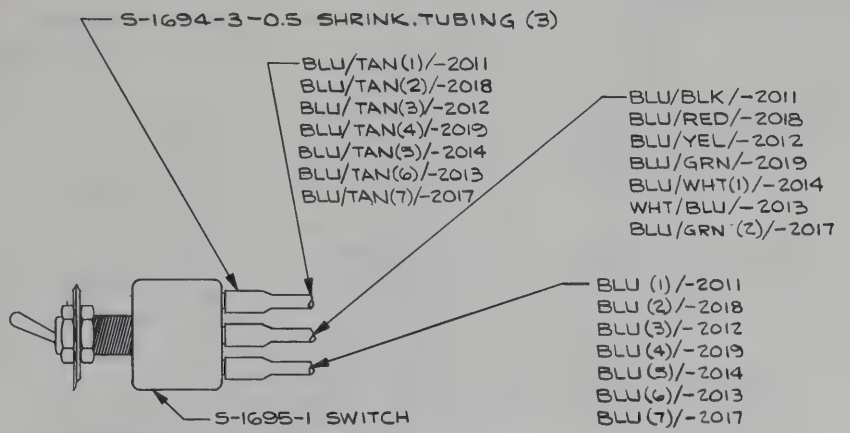

2011 CABLE ASSY - AUDIO SEL SW, COMM 1
2012 CABLE ASSY - AUDIO SEL SW, COMM 2
2013 CABLE ASSY - AUDIO SEL SW, ADF
2014 CABLE ASSY - AUDIO SEL SW, DME
2017 CABLE ASSY - AUDIO SEL SW, MKR BCN
2018 CABLE ASSY - AUDIO SEL SW, NAV 1
2019 CABLE ASSY - AUDIO SEL SW, NAV 2

2019	2018	2017	2014	2013	2012	2011	EFFECTIVE SERIALS	PAGE	PART NUMBER	DESCRIPTION
A/R	A/R	A/R	A/R	A/R	A/R	A/R		2.73.1		WIRING
1	1	1	1	1	1	1			S-1695-1	SWITCH
3	3	3	3	3	3	3			S-1694-3-0.5	SHRINK. TUBING
									-2019	CA ASSY-NAV 2
									-2018	CA ASSY-NAV 1
									-2017	CA ASSY-MKR BCN
									-2014	CA ASSY-DME
									-2013	CA ASSY-ADF
									-2012	CA ASSY-COMM 2
									-2011	CA ASSY-COMM 1

NO. REQD/NEXT ASSY

LIST OF MATERIAL

DO NOT SCALE PRINT
BREAK ALL SHARP EDGES
A/R = AS REQD
CES-XXXX=CESSNA SPEC. NO.
S-XXX OR CMXXXX=CESSNA STD. NO.
$=APPROX EQUAL SPACES
CES-1000 IS APPLICABLE
VENDOR CODES PER S-1400

UNLESS OTHERWISE SPECIFIED
DIMENSIONS ARE IN INCHES
TOLERANCES ARE

DECIMALS	ANGLES	
.00 ±.03	MACH	FORMED
.000 ±.010	±0 30'	±2°

FOR HOLES, CSINKS, ETC., SEE CES 1012
FOR BASIC CODES SEE NAS 523

BJ-MS20470AD	BB-MS20426AD

SUPERSEDES: P 2.73.0

SUPERSEDED BY:

CONTRACT NO:

	NAME	DATE
DESIGN	ACKERSON	5/21/68
GROUP	H. WISE	5/22/68
DRAWN	C. GARCIA	5/16/68
CHECK	G. IRVIN	5/18/68
STRESS	McCOSH	5/18/68
PROJECT	SATTLER	5/22/68
APPD	SWANEY	5/18/68

Cessna AIRCRAFT CO.
COMMERCIAL AIRCRAFT DIV.
5800 E. PAWNEE
WICHITA, KANSAS

TITLE
CABLE ASSY - AUDIO SELECTOR SWITCHES, ACCESSORY KITS

SIZE C | CODE IDENT. NO. 71379 | 1570001

SCALE: NONE | 337 | PAGE: 2.73.0

FORM NO. 80-221

REVISION			
LET	DESCRIPTION	DATE	APPD
A	BY REV: REVISED & REDRAWN, ADD S-1838-2, 0570084-2, MKR BCN SW, RCVR SW NO.5, RCVR SW NO.6 & WIRE LENGTHS ED&RR 24024&10147 (SR5441)IX	JWH 7/2/68	GKI MDS DKM WPW

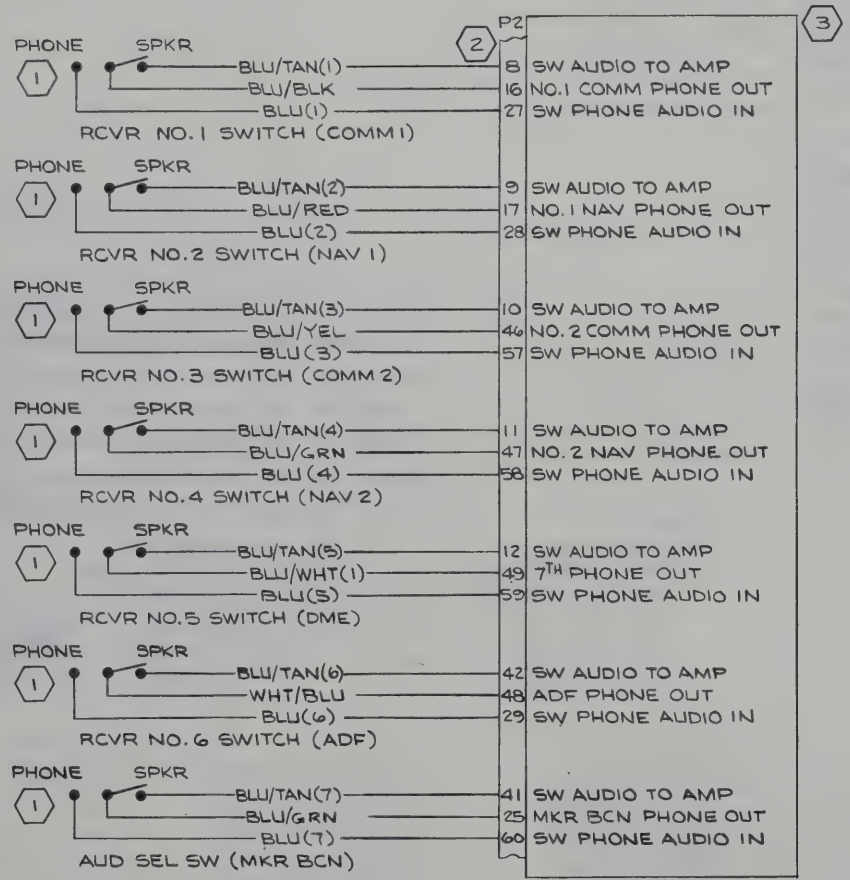

WIRE CODE NO.	GA	MATERIAL	LG	TERMINALS		SERIALS
WHT/BLU	22	-22-9-6	36"	S-1837-1	SOLDER	
BLU/TAN(7)		-22-6-10				
BLU/TAN(6)		-22-6-10				
BLU/TAN(5)		-22-6-10				
BLU/TAN(4)		-22-6-10				
BLU/TAN(3)		-22-6-10				
BLU/TAN(2)		-22-6-10				
BLU/TAN(1)		-22-6-10				
BLU/YEL		-22-6-4				
BLU/GRN		-22-6-				
BLU/WHT(1)		-22-6-9				
BLU/RED		-22-6-2				
BLU/GRN		-22-6-5				
BLU/BLK		-22-6-0				
BLU(7)		-22-6				
BLU(6)		-22-6				
BLU(5)		-22-6				
BLU(4)		-22-6				
BLU(3)		-22-6				
BLU(2)		-22-6				
BLU(1)	22	-22-6	36"	S-1837-1	SOLDER	

WIRE TABLE

NOTES:

1. "PHONE" FUNCTION ON KEYWAY SIDE OF SW

ITEM NO.	PART NO.	DESCRIPTION	PAGE
3	0570084-2	JCT BOX ASSY	7.13
2	S-1838-2	HOUSING	
1	S-1695-1	SWITCH	2.73.0

EQUIPMENT TABLE

CES-1000 IS APPLICABLE VENDOR CODES PER S-1400
CES-XXXX=CESSNA SPEC. NO.
S-XXX OR CMXXXX=CESSNA STD. NO.

SUPERSEDES: P 2.73.1

SUPERSEDED BY:

CONTRACT NO:

	NAME	DATE
DESIGN	ACKERSON	5/21/68
GROUP	H. WISE	5/22/68
DRAWN	C. GARCIA	5/16/68
CHECK	G. IRVIN	5/18/68
STRESS	McCOSH	5/19/68
PROJECT	J.R SATTLER	5/22/68
APPD	SWANEY	5/18/68

Cessna AIRCRAFT CO.
COMMERCIAL AIRCRAFT DIV.
5800 E. PAWNEE
WICHITA, KANSAS

TITLE
WIRING DIAGRAM — AUDIO SELECTOR SWITCHES, ACCESSORY KITS

SIZE C | CODE IDENT. NO. 71379 | DWG NO. 1570001

SCALE: NONE | 337 | PAGE: 2.73.1

FORM NO. 80-215A

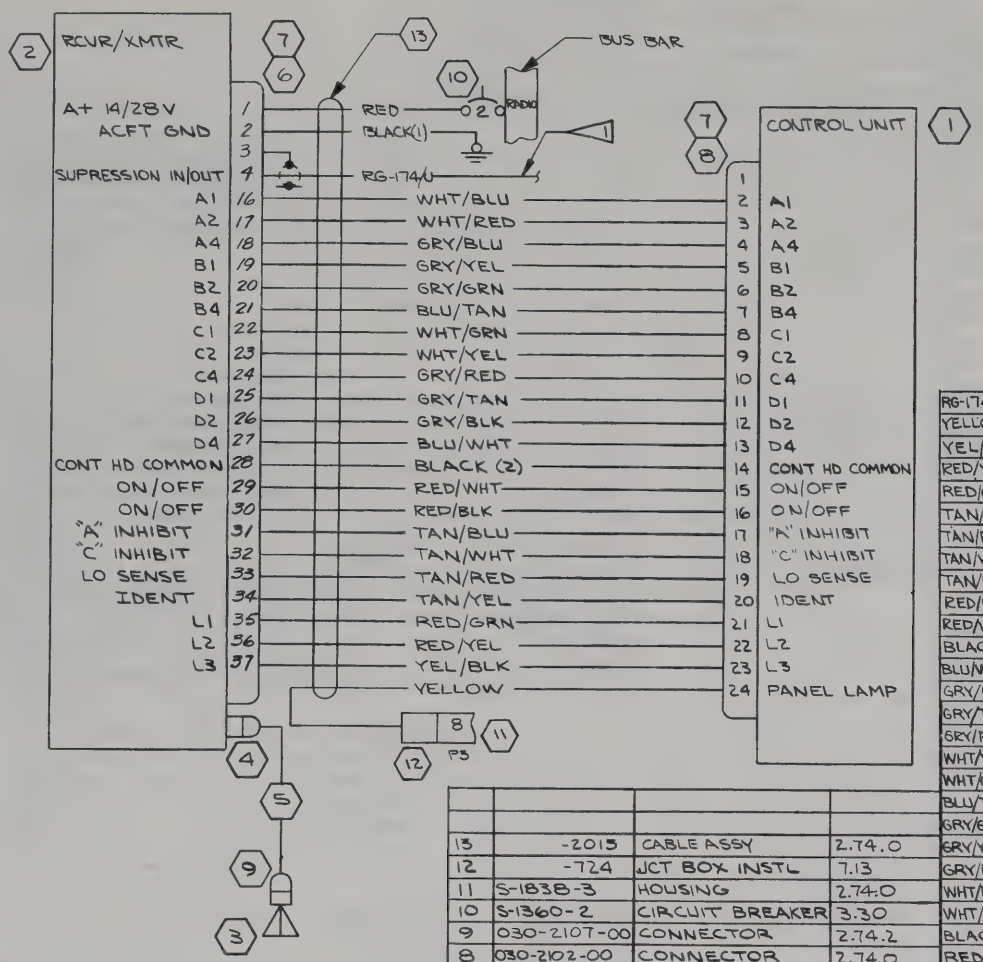

REVISION			
LET	DESCRIPTION	DATE	APPD
A	BY REV: GRY/RED WAS GRY/GRN (2), RED/WHT WAS RED(1), RED/BLK WAS RED(2) RED/YEL WAS YEL/WHT, YELLOW WAS GRY/YEL (2), GRY/YEL WAS GRY/YEL(1), GRY/GRN WAS GRY/GRN (1), RED WAS RED(3), S-1360-2 WAS S-1360-5 ED&RR 10337 (SR5905)	RLY 1-23-69	JWH TMDS DKM 4/W JHL

RG-174/U		CABLE		SOLDER				
YELLOW	20	-20-4		SOLDER	S-1837-1			
YEL/BLK	22	-22-4-0			SOLDER			
RED/YEL	22	-22-2-4						
RED/GRN	22	-22-2-5						
TAN/YEL	22	-22-10-4						
TAN/RED	22	-22-10-2						
TAN/WHT	22	-22-10-9						
TAN/BLU	22	-22-10-6						
RED/BLK	18	-18-2-0						
RED/WHT	18	-18-2-9						
BLACK(2)	20	-20-0						
BLU/WHT	22	-22-6-9						
GRY/BLK	22	-22-8-0						
GRY/TAN	22	-22-8-10						
GRY/RED	22	-22-8-2						
WHT/YEL	22	-22-9-4						
WHT/GRN	22	-22-9-5						
BLU/TAN	22	-22-6-10						
GRY/GRN	22	-22-8-5						
GRY/YEL	22	-22-8-4						
GRY/BLU	22	-22-8-6						
WHT/RED	22	-22-9-2						
WHT/BLU	22	-22-9-6			SOLDER			
BLACK(1)	18	-18-0			S-1367-2-8			
RED	18	-18-2		SOLDER	S-1367-2-8			
WIRE CODE NO.	GA	MATERIAL	LG	TERMINALS				SERIALS

WIRE TABLE

ITEM NO.	PART NO.	DESCRIPTION	PAGE
13	-2015	CABLE ASSY	2.74.0
12	-724	JCT BOX INSTL	7.13
11	S-1838-3	HOUSING	2.74.0
10	S-1360-2	CIRCUIT BREAKER	3.30
9	030-2107-00	CONNECTOR	2.74.2
8	030-2102-00	CONNECTOR	2.74.0
7	030--1019-00	CABLE CLAMP HALF	3.30 & 4.33
6	030-2109-00	CONNECTOR	2.74.0
5	-2016	CABLE ASSY	2.74.2
4	030-0060-00	CONNECTOR	2.74.2
3	C589505-0101	ANTENNA	6.26
2	C589504-0101	RCVR/XMTR UNIT 12V	4.33
1	C589503-0101	CONTROL PANEL 12V	3.30

EQUIPMENT TABLE

NOTES:

1. SUPRESSOR CABLE ROUTES WITH CABLE TO CONTROL PANEL. CENTER CONDUCTOR CONNECTS TO PIN 4 OF 300 DME CABLE & SHIELD CONNECTS TO PIN 8. CENTER CONDUCTOR TERMINATED WITH END CAP WHEN NOT USED

CES-1000 IS APPLICABLE VENDOR CODES PER S-1400
CES-XXXX=CESSNA SPEC. NO.
S-XXX OR CMXXXX=CESSNA STD. NO.

SUPERSEDES:

SUPERSEDED BY:

CONTRACT NO:

	NAME	DATE
DESIGN		
GROUP	H. Wiest	11-12-68
DRAWN	YOUNGERS	10-31-68
CHECK	HARRIS	11-5-68
STRESS	D.K. McCook	11-11-68
PROJECT	H. McCarter	11-18-68
APPD	SWANEY	11-7-68

Cessna AIRCRAFT CO.
COMMERCIAL AIRCRAFT DIV.
5800 E. PAWNEE
WICHITA, KANSAS

TITLE
WIRING DIAGRAM — CESSNA 300 TRANSPONDER

SIZE	CODE IDENT. NO.	DWG NO.
C	71379	1570001

SCALE: NONE | 337 | PAGE: 2.74.1

FORM NO. 80-215A

ED&RR 10045 (SR5905)

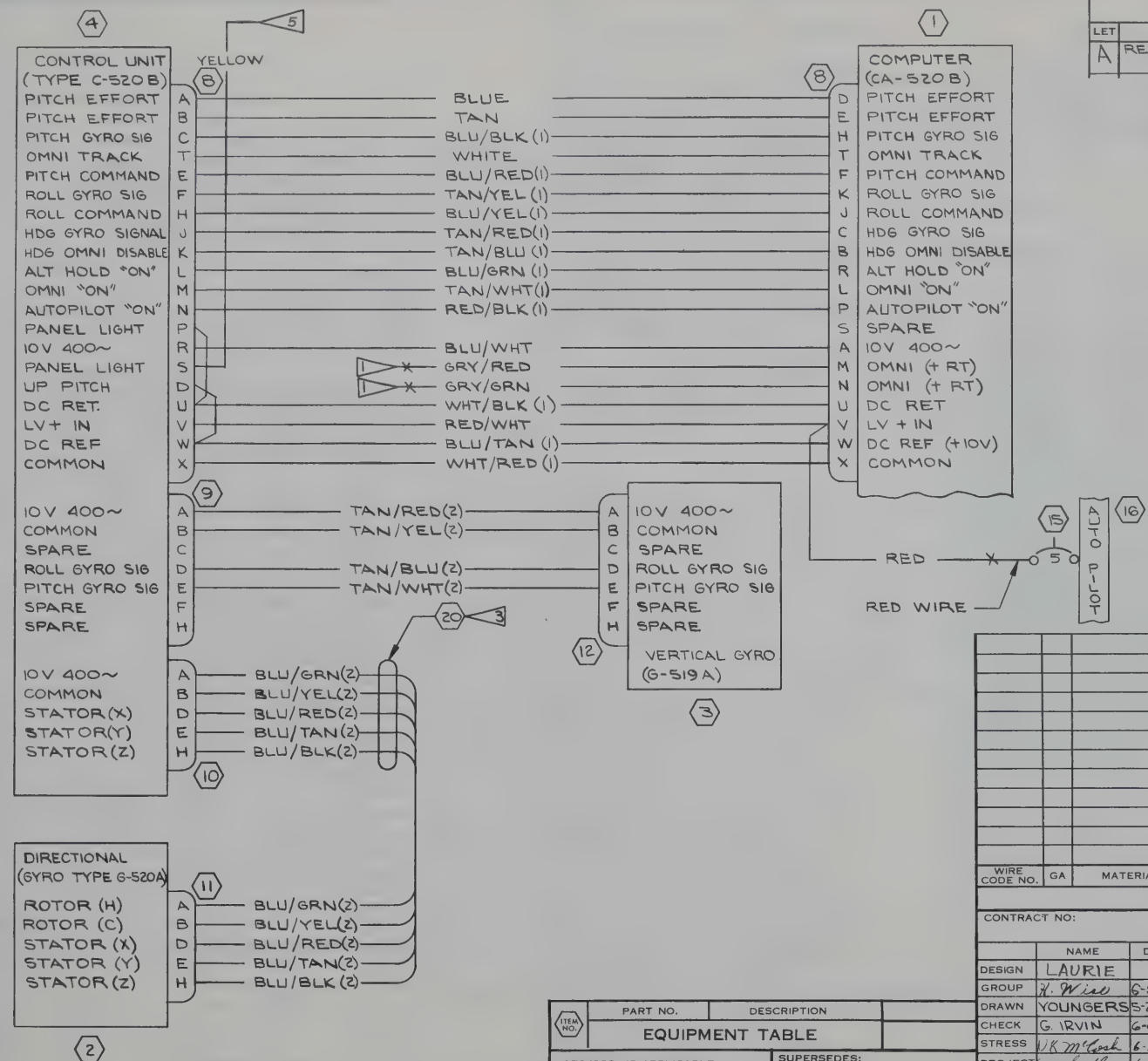

REVISION			
LET	DESCRIPTION	DATE	APPD
A	REFER TO PAGE 14.4.4 FOR REVISION		

WIRE CODE NO.	GA	MATERIAL	LG	TERMINALS		SERIALS

WIRE TABLE

ITEM NO.	PART NO.	DESCRIPTION

EQUIPMENT TABLE

CES-1000 IS APPLICABLE
VENDOR CODES PER S-1400
CES-XXXX=CESSNA SPEC. NO.
S-XXX OR CMXXXX=CESSNA STD. NO.

SUPERSEDES: P14.4.3

SUPERSEDED BY:

CONTRACT NO:

	NAME	DATE
DESIGN	LAURIE	
GROUP	H. Wise	6-5-68
DRAWN	YOUNGERS	5-27-68
CHECK	G. IRVIN	6-4-68
STRESS	V.K. McCosh	6-5-68
PROJECT	H. Sattler	6-6-68
APPD	SWANEY	6-4-68

Cessna AIRCRAFT CO.
COMMERCIAL AIRCRAFT DIV.
5800 E. PAWNEE
WICHITA, KANSAS

TITLE
WIRING DIAGRAM — CESSNA 400 NAV-O-MATIC (OPT)

SIZE	CODE IDENT. NO.	DWG NO.
C	71379	1570000

SCALE: NONE | 337 | PAGE: 14.4.5

FORM NO. 80-215A

ED&RR 02329 (SR5752)

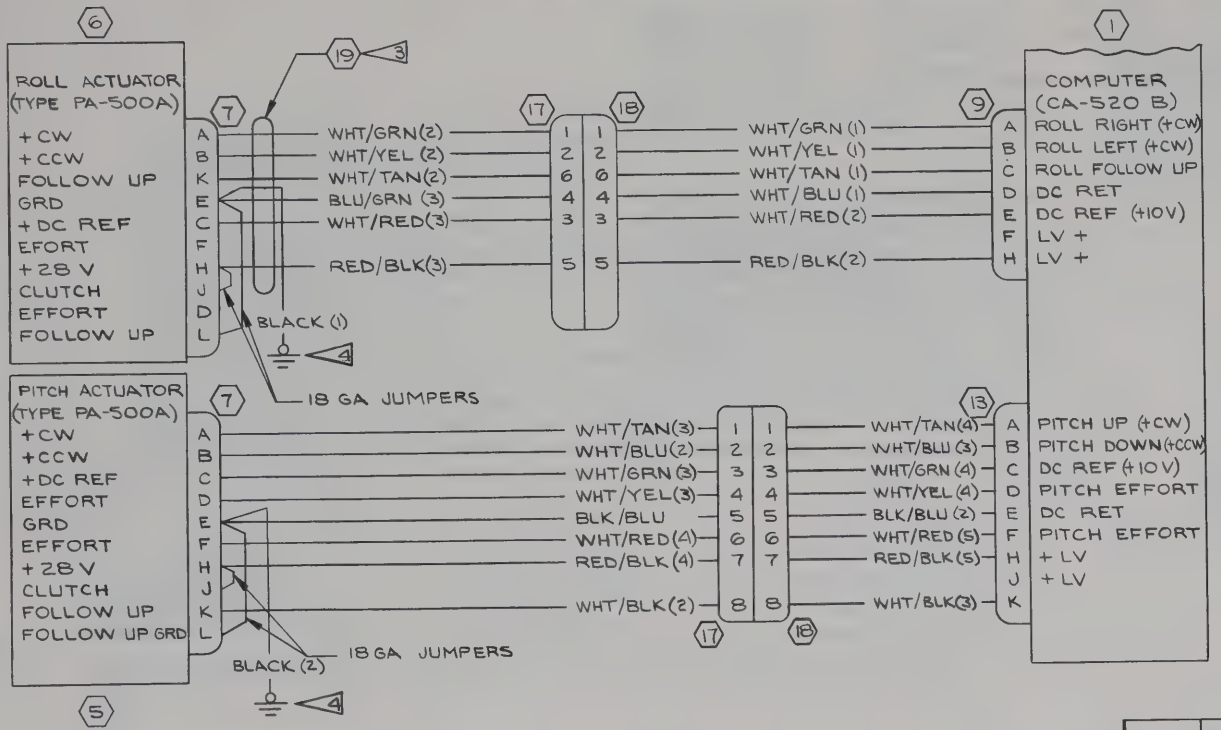

REVISION			
LET	DESCRIPTION	DATE	APPD

WIRE CODE NO.	GA	MATERIAL	LG	TERMINALS		SERIALS

WIRE TABLE

ITEM NO.	PART NO.	DESCRIPTION
	EQUIPMENT TABLE	

CES-1000 IS APPLICABLE
VENDOR CODES PER S-1400
CES-XXXX=CESSNA SPEC. NO.
S-XXX OR CMXXXX=CESSNA STD. NO.

SUPERSEDES: P14.4.3

SUPERSEDED BY:

CONTRACT NO:

	NAME	DATE
DESIGN	LAURIE	
GROUP	H. Wise	6-5-68
DRAWN	YOUNGERS	5-27-68
CHECK	G. IRVIN	6-4-68
STRESS	OK McCosh	6-5-68
PROJECT	R Sattler	6-6-68
APPD	SWANEY	6-4-68

Cessna AIRCRAFT CO.
COMMERCIAL AIRCRAFT DIV.
5800 E. PAWNEE
WICHITA, KANSAS

TITLE
WIRING DIAGRAM — CESSNA 400 NAV-O-MATIC (OPT)

SIZE C | CODE IDENT. NO. 71379 | DWG NO. 1570000

SCALE: NONE | 337 | PAGE: 14.4.6

ED&RR 02329 (SR5752)

FORM NO. 80-215A

REVISION			
LET	DESCRIPTION	DATE	APPD

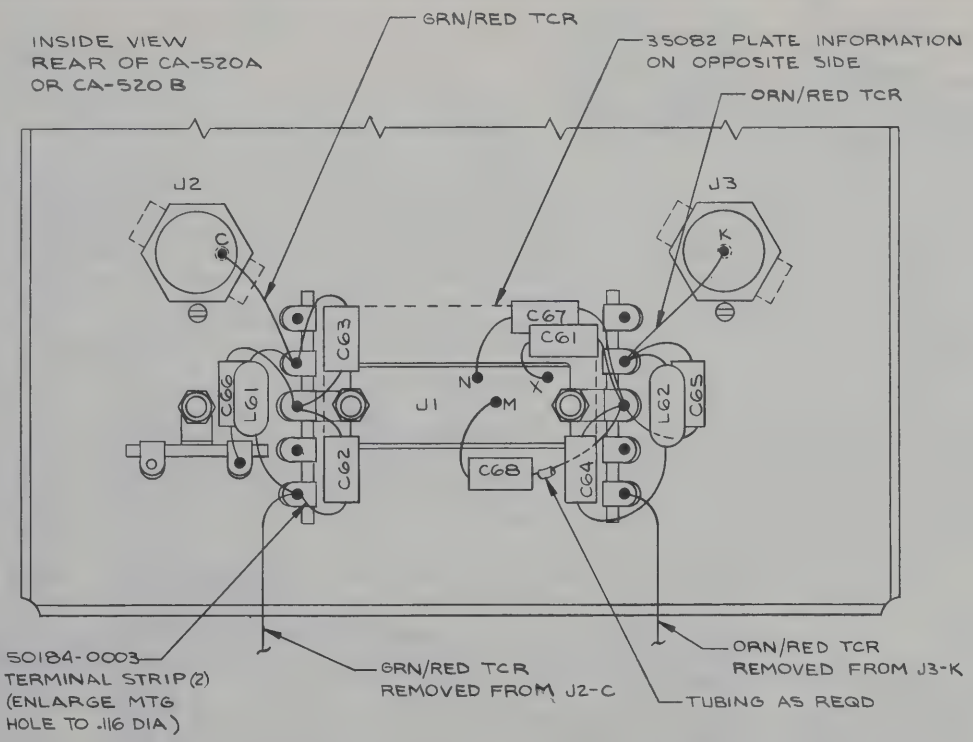

SCHEMATIC DIAGRAM

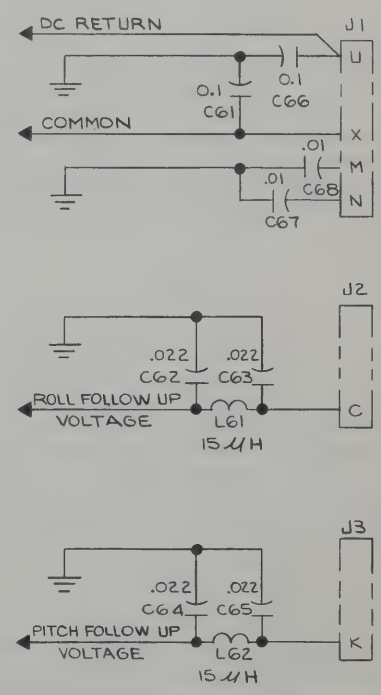

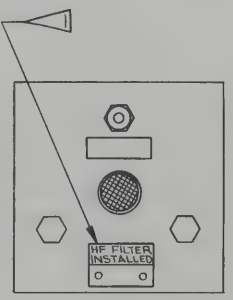

NOTES:

1. TO BE MOUNTED WITH EXISTING SCREWS WHEN MODIFICATION HAS BEEN COMPLETED
2. REMOVE NUTS FROM CONNECTOR J1, BACK OUT CONNECTOR, INSTALL INFORMATION PLATE 35082 REPLACE CONNECTOR ON CHASSIS THEN INSTALL TWO TERMINAL STRIPS 50184-0003 AS SHOWN USING CONNECTOR MTG SCREWS, REINSTALL NUTS
3. INSTALL CAPACITORS AND CHOKES AS SHOWN IN WIRING AND SCHEMATIC DIAGRAMS
4. UNSOLDER WIRES FROM J2-C AND J3-K AND RESOLDER TO NEW LOCATIONS AS SHOWN
5. CONTACTING SURFACES BETWEEN COMPUTER AND SHELF MUST BE CLEAN AND FREE OF CONTAMINANTS IN ORDER TO MAKE POSITIVE ELECTRICAL COTACT

FILTER KIT

ITEM NO.	ARC PART NO.	DESCRIPTION	QTY
1	32423-9223	.022 μF CAPACITOR	4
2	32423-9103	.010 μF CAPACITOR	2
3	32423-9102	.100 μF CAPACITOR	2
4	31193-0150	15 μH CHOKE	2
5	50184-0003	TERMINAL STRIP	2
6	35082	INFORMATION PLATE	1
7	21471-0502 (3")	GREEN/RED WIRE	1
8	21471-0302 (3")	ORANGE/RED WIRE	1
9	8800-00326 (6")	TUBING	1
10	35094	DRAWING	1

EQUIPMENT TABLE

ITEM NO.	PART NO.	DESCRIPTION

CES-1000 IS APPLICABLE VENDOR CODES PER S-1400
CES-XXXX=CESSNA SPEC. NO.
S-XXX OR CMXXXX=CESSNA STD. NO.

SUPERSEDES: P14.4.1.1

SUPERSEDED BY:

CONTRACT NO:		
	NAME	DATE
DESIGN	LAURIE	
GROUP	N. Wise	6-5-68
DRAWN	YOUNGERS	5-27-68
CHECK	G. IRWIN	6-4-68
STRESS	JKM Cook	6-5-68
PROJECT	A Sutton	6-6-68
APPD	SWANEY	6-4-68

Cessna AIRCRAFT CO.
COMMERCIAL AIRCRAFT DIV.
5800 E. PAWNEE
WICHITA, KANSAS

TITLE
WIRING DIAGRAM — NAV-O-MATIC 400 SYSTEM (OPT)

SIZE	CODE IDENT. NO.	DWG NO.
C	71379	1570000

SCALE: NONE | 337 | PAGE: 14.4.7

FORM NO. 80-215A

ED&RR 02329 (GR5752)

REVISION			
LET	DESCRIPTION	DATE	APPD

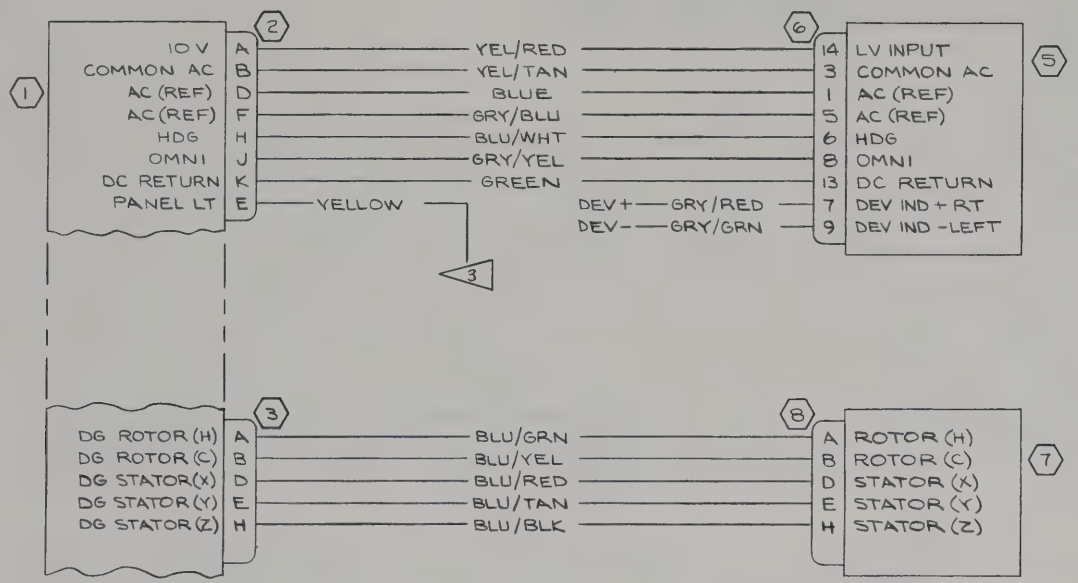

WIRE CODE NO.	GA	MATERIAL	LG	TERMINALS		SERIALS

WIRE TABLE

ITEM NO.	PART NO.	DESCRIPTION

EQUIPMENT TABLE

CES-1000 IS APPLICABLE VENDOR CODES PER S-1400
CES-XXXX=CESSNA SPEC. NO.
S-XXX OR CMXXXX=CESSNA STD. NO.

SUPERSEDES: P14.3.1 & P14.3.2

SUPERSEDED BY:

CONTRACT NO:

	NAME	DATE
DESIGN	LAURIE	
GROUP	R. Wise	5-24-68
DRAWN	YOUNGERS	5-7-68
CHECK	G IRVIN	5-10-68
STRESS	AK M. Cook	5-23-68
PROJECT	A. Sattler	6-6-68
APPD	S WANJEY	5-10-68

Cessna AIRCRAFT CO.
COMMERCIAL AIRCRAFT DIV.
5800 E. PAWNEE
WICHITA, KANSAS

TITLE
WIRING DIAGRAM—
CESSNA 300 NAV-O-MATIC
AUTOPILOT (24VOLT)

SIZE	CODE IDENT. NO.	DWG NO.
C	71379	1570000

SCALE: NONE | 337 | PAGE: 14.7.1

FORM NO. 80-215A

ED&RR 02325 (SR5751)

REVISION			
LET	DESCRIPTION	DATE	APPD

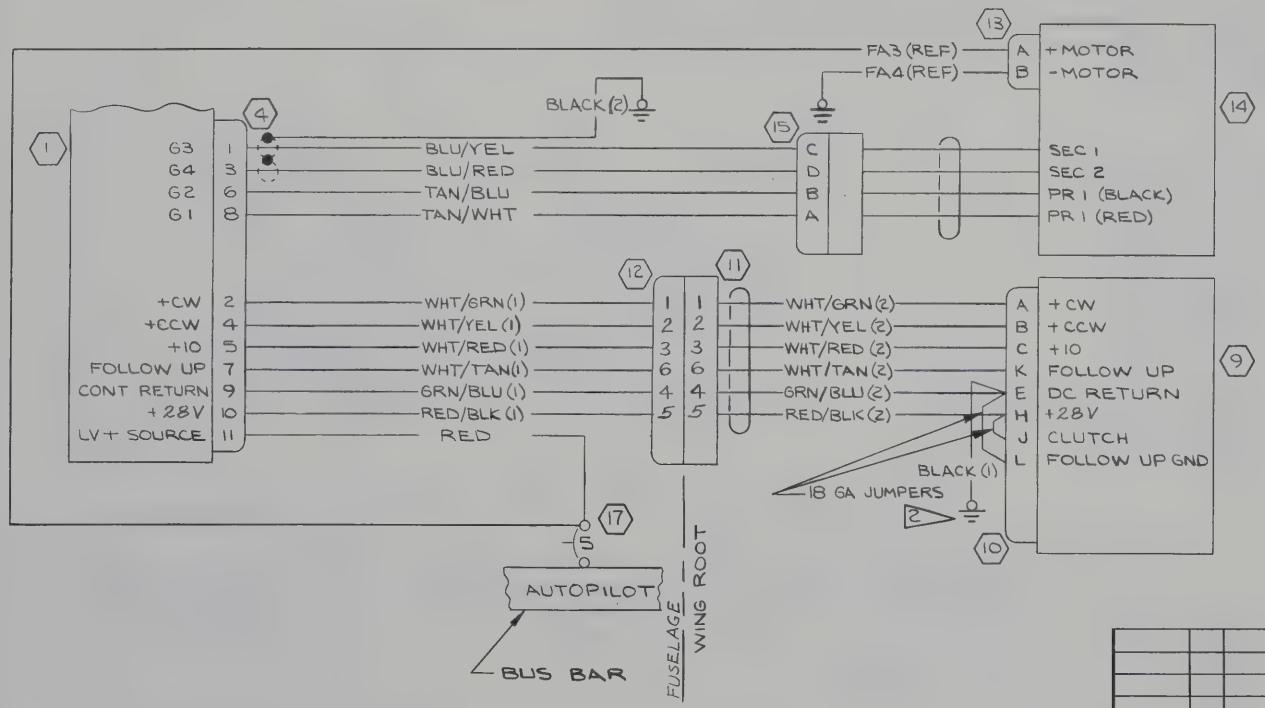

WIRE CODE NO.	GA	MATERIAL	LG	TERMINALS		SERIALS

WIRE TABLE

ITEM NO.	PART NO.	DESCRIPTION

EQUIPMENT TABLE

CES-1000 IS APPLICABLE
VENDOR CODES PER S-1400
CES-XXXX=CESSNA SPEC. NO.
S-XXX OR CMXXXX=CESSNA
STD. NO.

SUPERSEDES: P19.3.1 & P14.3.2

SUPERSEDED BY:

CONTRACT NO:

	NAME	DATE
DESIGN	LAUKIE	
GROUP	H. Wier	5-29-68
DRAWN	YOUNGERS	5-7-68
CHECK	G IRVIN	5-10-68
STRESS	BKM Cook	5-23-68
PROJECT	R Sattler	6-6-68
APPD	SWANEY	5-10-68

Cessna AIRCRAFT CO.
COMMERCIAL AIRCRAFT DIV.
5800 E. PAWNEE
WICHITA, KANSAS

TITLE
WIRING DIAGRAM —
CESSNA 300 NAV O MATIC
AUTOPILOT (24 VOLT)

SIZE	CODE IDENT. NO.	DWG NO.
C	71379	1570000

SCALE: NONE | 337 | PAGE: 14.7.2

FORM NO. 80-215A

ED & RR 02325 (SR5751)

SECTION VIII

NUMERICAL INDEX

PART NUMBER	FIGURE AND INDEX NO.
A-374A	5-2- 6
AN100-3	3-5- 3
AN100-3	3-6- 8
AN100-3	3-6- 16
AN1021Z6-4	1-7- 32
AN155-16S	1-13- 16
AN155-16S	1-14- 22
AN155-16S	1-15- 18
AN155-16S	1-19- 7
AN155-16S	1-20- 19
AN155-16S	1-21- 26
AN155-16S	1-22- 13
AN155-16S	1-23- 10
AN155-16S	1-24- 13
AN155-16S	1-24- 28
AN155-16S	1-25- 24
AN155B16S	1-16- 31
AN155B16S	1-17- 11
AN155B16S	1-18- 11
AN155B16S	1-21- 43
AN155B16S	1-22- 27
AN155B16S	1-23- 27
AN161-16LS	1-20- 20
AN161-16LS	1-25- 23
AN21-9	1-17-
AN21-9	1-17-
AN21-9	1-18-
AN21-9	1-18-
AN21-9	1-22-
AN21-9	1-22-
AN21-9	1-23-
AN21-9	1-23-
AN23-10	1-22- 10
AN23-10	1-22- 15
AN23-10	1-23- 11
AN23-10	1-23- 15
AN23-10	1-24- 25
AN23-10	1-24- 30
AN24-15	1-21- 20
AN3-10A	1-25- 37
AN3-10A	1-25- 46
AN3-11A	1-21- 35
AN3-12A	1-20- 16
AN3-12A	1-25- 16
AN3-3A	1-24- 37
AN3-3A	1-25- 61
AN3-4A	1-13- 32
AN3-4A	1-14- 10
AN3-4A	1-15- 6
AN3-4A	1-16- 7
AN3-4A	1-17- 7
AN3-4A	1-18- 7
AN3-4A	1-19- 2
AN3-4A	1-21-
AN3-4A	1-21- 28
AN3-4A	1-22- 7
AN3-4A	1-22- 23
AN3-4A	1-23- 7
AN3-4A	1-23- 23
AN3-4A	1-24- 8
AN3-4A	1-24- 34
AN3-6	1-25- 43
AN3-7	1-20- 21
AN3-7	1-25- 19
AN3-7A	1-25- 58
AN3-9A	1-16- 23
AN310-C3	1-20- 23
AN310-C3	1-25- 21
AN310-3	1-22- 11
AN310-3	1-22- 16
AN310-3	1-23- 12
AN310-3	1-23- 16
AN310-3	1-24- 26

PART NUMBER	FIGURE AND INDEX NO.
AN310-3	1-24- 31
AN320-1	1-17-
AN320-1	1-17-
AN320-1	1-18-
AN320-1	1-18-
AN320-1	1-22-
AN320-1	1-22-
AN320-1	1-23-
AN320-1	1-23-
AN320-4	1-21- 21
AN340-6	1-8-18C
AN340B6	1-15-
AN340B6	1-16-
AN340B6	1-17-
AN340B6	1-18-
AN340B6	1-19-
AN340B6	1-20-
AN340B8	2-3- 8
AN340B8	2-4- 8
AN345-10	3-2- 20
AN380-2-2	1-15-
AN380-2-2	1-15- 23
AN4-10A	1-13- 26
AN4-10A	1-15- 11
AN4-10A	1-16- 12
AN4-10A	1-21- 46
AN4-51A	1-17- 13
AN4-51A	1-18- 13
AN4-51A	1-22- 29
AN4-51A	1-23- 29
AN5-11A	1-14- 17
AN5-11A	1-19- 17
AN5-11A	1-24- 21
AN507-1032R6	1-21- 65
AN507-1032R8	1-20-
AN507-632R10	1-15-
AN507-632R10	1-16-
AN507-632R10	1-17-
AN507-632R10	1-18-
AN507-632R10	1-20- 30
AN507-632R20	1-16- 2
AN507-632R20	1-17- 2
AN507-632R20	1-18- 2
AN507-632R20	1-19- 24
AN507-632R20	1-19- 30
AN507-632R20	1-21- 3
AN507-632R20	1-22- 3
AN507-632R20	1-23- 3
AN507-632R20	1-24- 3
AN507-632R28	4-1-110
AN507-632R32	1-9- 4
AN507-632R32	1-12- 2
AN507-632R6	1-2- 12
AN507-632R6	1-13- 4
AN507-632R6	1-14- 2
AN507-632R6	1-15- 2
AN507-632R6	1-20- 2
AN507-632R6	1-25- 4
AN507-632R6	4-3- 28
AN507-632R7	4-1-
AN507-632R8	1-2-12D
AN507-632R8	1-2-15A
AN507-632R8	1-4- 3
AN507-632R8	1-4- 7
AN507-632R8	1-5-
AN507-632R8	1-15-
AN507-632R8	1-16-
AN507-632R8	4-3- 14
AN507-632R8	4-3- 58
AN507-8R8	1-14-
AN507-8R8	4-1- 28
AN507-832R10	1-6- 5
AN507-832R6	4-2- 45

PART NUMBER	FIGURE AND INDEX NO.
AN507-832R7	4-2- 38
AN507-832R8	4-2- 33
AN507-832R8	4-2- 40
AN507B632R10	1-25-
AN507B632R10	1-25- 69
AN507B832R20	3-3- 13
AN507B832R6	3-3- 15
AN509-10R32C	3-3- 9
AN509-8R9	3-1- 16
AN509-8R9	3-1- 20
AN515-10R9	1-21- 59
AN515-3R4	3-2- 34
AN515-4-8	4-1- 36
AN515-4R6	4-1- 16
AN515-4R6	4-1- 38
AN515-4R6	4-1- 56
AN515-4R6	4-1- 76
AN515-4R6	4-1- 98
AN515-4R8	4-1- 14
AN515-4R8	4-1- 54
AN515-4R8	4-1- 74
AN515-4R8	4-1- 96
AN515-6R10	1-9- 16
AN515-6R10	1-10- 5
AN515-6R10	1-10- 8
AN515-6R10	1-21- 67
AN515-6R10	4-1-
AN515-6R12	1-1- 9
AN515-6R12	1-8- 10
AN515-6R14	1-13- 7
AN515-6R16	1-11- 3
AN515-6R16	1-12- 9
AN515-6R22	4-1- 91
AN515-6R5	1-16- 42
AN515-6R5	1-17- 16
AN515-6R5	1-18- 16
AN515-6R5	1-19- 21
AN515-6R6	1-2- 11
AN515-6R6	1-2-12C
AN515-6R6	1-4- 14
AN515-6R6	1-5-
AN515-6R8	1-5- 3
AN515-6R8	1-8-18A
AN515-6R8	1-9- 18
AN515-6R8	1-9- 39
AN515-6R8	1-10- 19
AN515-6R8	1-11- 9
AN515-6R8	1-11- 11
AN515-6R8	1-12- 18
AN515-6R8	1-15- 34
AN515-6R8	4-1-
AN515-6R8	4-1-
AN515-6R8	4-1- 12
AN515-6R8	4-1- 34
AN515-6R8	4-1-
AN515-6R8	4-1- 52
AN515-6R8	4-1-
AN515-6R8	4-1- 72
AN515-6R8	4-1- 94
AN515-6R8	5-2- 7
AN515-8R10	1-7- 16
AN515-8R10	1-9- 8
AN515-8R10	1-9- 20
AN515-8R10	1-9- 22
AN515-8R10	1-9- 29
AN515-8R10	1-11- 14
AN515-8R10	2-3- 15
AN515-8R10	2-3- 19
AN515-8R10	2-4- 17
AN515-8R10	2-4- 21
AN515-8R10	4-2- 30
AN515-8R10	4-2- 47
AN515-8R12	1-2- 5

PART NUMBER	FIGURE AND INDEX NO.
AN515-8R12	1-7- 7
AN515-8R16	1-12- 13
AN515-8R16	1-12- 15
AN515-8R16	2-1- 6
AN515-8R16	2-2- 7
AN515-8R16	2-3- 5
AN515-8R16	2-4- 2
AN515-8R18	1-2C- 27
AN515-8R20	1-2- 8
AN515-8R6	1-9- 11
AN515-8R6	1-11- 6
AN515-8R6	1-12- 23
AN515-8R6	1-13- 10
AN515-8R6	1-25- 6
AN515-8R6	3-4- 10
AN515-8R6	3-4- 13
AN515-8R6	3-4- 19
AN515-8R6	3-4-
AN515-8R6	3-7- 3
AN515-8R6	4-1- 9
AN515-8R6	4-1- 31
AN515-8R6	4-1- 49
AN515-8R6	4-1- 69
AN515-8R6	4-2- 10
AN515-8R6	4-3- 47
AN515-8R7	1-7- 11
AN515-8R7	2-4- 5
AN515-8R8	1-3- 12
AN515-8R8	1-3- 17
AN515-8R8	1-3- 20
AN515-8R8	1-3- 24
AN515-8R8	1-3- 29
AN515-8R8	1-3- 35
AN515-8R8	1-7- 4
AN515-8R8	1-7- 22
AN515-8R8	1-7- 25
AN515-8R8	1-7- 28
AN515-8R8	1-9-11A
AN515-8R8	1-9- 26
AN515-8R8	1-9-
AN515-8R8	1-9- 33
AN515-8R8	1-9- 35
AN515-8R8	1-9- 37
AN515-8R8	1-10- 13
AN515-8R8	1-10- 15
AN515-8R8	1-10- 17
AN515-8R8	1-11- 20
AN515-8R8	1-12- 11
AN515-8R8	1-14-
AN515-8R8	1-20- 6
AN515-8R8	1-22- 20
AN515-8R8	1-23- 20
AN515-8R8	2-1- 13
AN515-8R8	2-2- 13
AN515-8R8	2-2- 16
AN515-8R8	2-4- 11
AN515-8R8	2-4- 14
AN515-8R8	4-1- 29
AN515-8R8	4-1-
AN515-8R8	4-3- 31
AN515-8R8	4-3- 36
AN515-8R8	4-4- 8
AN515-8R8	5-1- 30
AN515-8R8	5-1- 43
AN515-8R8	5-1- 62
AN515-8R8	5-1- 80
AN515-8R8	5-1- 93
AN515-8R8	5-2- 3
AN515B6R10	1-4-
AN515B6R10	2-2-
AN515B6R10	2-3-
AN515B6R10	2-3-
AN515B6R12	1-1-12A

PART NUMBER	FIGURE AND INDEX NO.
AN515B6R12	1-8- 4
AN515B6R12	1-14-
AN515B6R12	1-16-
AN515B6R12	1-17-
AN515B6R12	1-18-
AN515B6R12	1-19-
AN515B6R12	1-20- 34
AN515B6R14	1-15-
AN515B6R7	1-14-
AN515B8R12	3-3- 16
AN520-10R10	1-20- 8
AN520-10R10	1-25- 11
AN520-10R10	1-25- 26
AN520-10R10	1-25- 52
AN520-10R10	1-25- 55
AN520-10R12	3-4- 7
AN520-10R22	3-3-
AN520-10R6	1-7- 20
AN520-10R6	1-9-31B
AN520-10R6	1-9- 31
AN520-10R6	1-10- 11
AN520-10R6	1-10-11B
AN520-10R6	1-11- 18
AN520-10R6	1-11-18B
AN520-10R6	1-12- 21
AN520-10R6	1-12-21B
AN520-10R6	1-14- 12
AN520-10R6	1-21- 8
AN520-10R6	1-21- 10
AN520-10R6	1-24- 10
AN520-10R6	1-25- 33
AN520-10R6	2-3- 13
AN520-10R6	2-4- 25
AN520-10R8C	5-1-
AN520-3R4	3-2- 9
AN520-3R4	3-2- 17
AN520-3R4	3-2- 49
AN520-6R10	1-17- 20
AN520-6R10	1-18- 20
AN520-6R10	1-22- 32
AN520-6R10	1-22- 34
AN520-6R10	1-23- 32
AN520-6R10	1-23- 34
AN520-6R10	1-24- 41
AN520-6R10	1-24- 43
AN520-8R9	3-1- 11
AN520DD10R6	1-19- 5
AN5206R10	1-19-
AN5206R10	1-20- 32
AN525-10R9	1-13- 36
AN525-10R9	1-15- 27
AN525-10R9	1-16- 35
AN525-10R9	1-21- 24
AN525-832R7	1-13- 38
AN525-832R7	1-15- 29
AN525-832R7	1-16- 37
AN525-832R7	1-21- 61
AN525-832R8	1-25- 28
AN742D12	4-2- 29
AN742D12	4-4- 7
AN742D12	5-2- 13
AN742D14	5-1- 29
AN742D14	5-1- 42
AN742D14	5-1- 61
AN742D14	5-1- 92
AN742D14-1	5-1- 79
AN742D16	1-2- 4
AN742D16	1-9- 7
AN742D16	1-9- 28
AN742D16	4-3- 30
AN742D16	4-3- 35
AN742D16	5-1- 19
AN742D3	3-4- 9

PART NUMBER	FIGURE AND INDEX NO.
AN742D3	3-4- 21
AN936A10	3-1- 9
AN936A10	3-4- 6
AN936A6	1-1- 8A
AN936A6	1-8- 9
AN936A6	1-8-18B
AN936A6	1-11- 4
AN936A6B	1-15-
AN936A6B	1-16-
AN936A6B	1-17-
AN936A6B	1-18-
AN936A6B	1-19-
AN936A6B	1-20-
AN936A8	1-3- 13
AN936A8	1-3- 25
AN936A8	1-7- 5
AN936A8	1-11- 7
AN936A8	2-1- 7
AN936A8	2-2- 8
AN936A8	2-3- 6
AN936A8	2-4- 3
AN936A8	3-1- 12
AN936B8	4-2- 11
AN960-C10L	1-20- 22
AN960-C10L	1-25- 20
AN960-10	1-14-
AN960-10	1-19-
AN960-10	1-20-
AN960-10	1-24-
AN960-10	1-25-
AN960-10	1-25- 38
AN960-10	1-25- 44
AN960-10	1-25- 47
AN960-10	3-2- 19
AN960-10L	1-5-
AN960-10L	1-13-
AN960-10L	1-13- 20
AN960-10L	1-15-
AN960-10L	1-15- 22
AN960-10L	1-16- 29
AN960-10L	1-20- 15
AN960-10L	1-21- 41
AN960-10L	1-25- 15
AN960-10L	3-1- 4
AN960-10L	3-2- 2
AN960-10L	3-2- 11
AN960-10L	3-2- 27
AN960-10L	3-2- 36
AN960-10L	3-2- 42
AN960-10L	3-3- 4
AN960-10L	4-2- 9
AN960-416	1-16- 21
AN960-416	1-21- 33
AN960-416L	1-13- 25
AN960-416L	1-15- 10
AN960-416L	1-16- 11
AN960-416L	1-21- 47
AN960-516	1-14- 19
AN960-516	1-19- 15
AN960-516	1-24- 22
AN960-6	1-13- 3
AN960-6	1-13- 11
AN960-6	1-14- 3
AN960-6	1-15- 3
AN960-6	1-16- 3
AN960-6	1-17- 3
AN960-6	1-18- 3
AN960-6	1-19- 25
AN960-6	1-21- 4
AN960-6	1-22- 4
AN960-6	1-23- 4
AN960-6	1-24- 4
AN960-6L	1-5-

PART NUMBER	FIGURE AND INDEX NO.
AN960-6L	2-1-
AN960-6L	4-3- 15
AN960-6L	4-3- 59
AN960-8	1-2-15C
AN960-8	1-4- 11
AN960-8L	1-7- 29
AN960-8L	1-12-
AN960-8L	2-3-
AN960-8L	3-7- 2
AN960-8L	5-2- 10
AN960C8L	4-2- 42
AN960D8	3-3-
AN960D8	4-2- 34
AN960D8	4-2- 49
AN960D8L	1-22-
AN960D8L	1-23-
AN970-3	3-4- 3
AN970-3	3-4- 5
AN970-3	3-4- 18
AV-547	1-10- 42
A6K75	1-8- 8
C47C011-1	4-2- 2
C582103-0101	1-7- 1
C582103-0201	1-7- 2
C582103-0301	1-7- 3
C582602-0201	1-6- 1
C582602-0202	1-6-
C589502-0101	1-7- 27
C589502-0201	1-7-27A
C589503-0101	1-3- 1
C589503-0201	1-3- 2
C589504-0101	1-3- 9
C589504-0201	1-3- 10
C589505-0101	3-8- 1
C596501-0102	4-3-
C596501-0103	4-3- 8
C596501-0103	4-3- 10
C596501-0103	4-3- 12
C596501-0103	4-3- 20
C596501-0103	4-3- 26
C596501-0103	4-3- 33
C596501-0103	4-3- 40
C596501-0103	4-3- 45
C596501-0104	4-3- 1
C596501-0105	4-3- 2
C596502-0201	4-3- 7
C596502-0201	4-3- 9
C596502-0201	4-3- 11
C596502-0201	4-3- 19
C596502-0201	4-3- 25
C596502-0201	4-3- 32
C596502-0201	4-3- 39
C596502-0201	4-3- 44
C596502-0202	4-3-
C596502-0202	4-3-
C596502-0202	4-3-
C596502-0202	4-3-
C596502-0202	4-3-
C596502-0202	4-3-
C596502-0202	4-3-
C596503-0101	4-3- 49
C596504-0101	4-2- 32
C596504-0101	4-2- 39
C596504-0101	4-2- 46
C596505-0101	4-2-
C596505-0101	4-2- 6
C596505-0101	4-2- 12
C596505-0101	4-2- 18
C596505-0101	4-2- 27
C598501-0101	3-1- 10
C598501-0102	3-1-
C598501-0102	3-1- 14

PART NUMBER	FIGURE AND INDEX NO.
C598501-0102	3-1- 18
C661001-0501	1-15- 38
C661001-0504	1-13- 49
C661001-0504	1-14- 31
C661001-0504	1-16- 44
C661001-0504	1-17- 19
C661001-0504	1-18- 19
C661001-0504	1-19- 28
C661001-0504	1-20- 31
EL-3077-502	2-3-
K-109A	1-8-
KA-25	4-1- 1
KA-25	4-1- 7
KA-25	4-1- 26
KA-25	4-1- 47
KA-25	4-1- 67
KA-25	4-1- 89
KA-32	1-6- 4
KI-201	2-2- 4
KI-211A	2-2- 5
KS-501A	2-1- 4
KS-505	2-2- 6
KX-160AE	2-2- 1
KX-160E	2-2- 2
KX-160FE	2-2- 3
KY-95E	2-1- 1
K41116-1	2-3-
K41182-2	2-3-
K41271-1	2-3-
MARK 12A	2-3- 1
MARK 12A	2-3- 2
MRA-2-5	4-1-101
MRE14PG7HVL	1-11-
MS20220-1	1-14- 16
MS20220-1	1-19- 14
MS20220-1	1-24- 20
MS20220-2	1-17- 14
MS20220-2	1-18- 14
MS20220-2	1-22- 30
MS20220-2	1-23- 30
MS20365-1032C	1-21- 25
MS20365-132	1-21- 49
MS20365-428C	1-16- 13
MS20365-632C	1-17- 4
MS20392-2-15	1-16- 30
MS20392-2-15	1-21- 42
MS20392-2-9	1-13-
MS20392-2-9	1-13- 18
MS20392-2-9	1-15-
MS20392-2-9	1-15- 20
MS20392-2C9	1-14- 23
MS20392-2C9	1-19- 9
MS20392-2C9	1-24- 15
MS20665-285	1-14- 20
MS21045L08	1-22- 21
MS21045L08	1-23- 21
MS21919DG6	1-9-31C
MS24665-132	1-14- 24
MS24665-132	1-19- 10
MS24665-132	1-24- 16
MS24665-134	1-13-
MS24665-134	1-13- 21
MS24665-134	1-15- 8
MS24665-134	1-16- 9
MS24665-134	1-20- 24
MS24665-134	1-21- 22
MS24665-134	1-22- 12
MS24665-134	1-22- 17
MS24665-134	1-23- 13
MS24665-134	1-23- 17
MS24665-134	1-24- 27
MS24665-134	1-24- 32
MS24665-134	1-25- 22

PART NUMBER	FIGURE AND INDEX NO.
MS24665-285	1-13- 23
MS24665-285	1-16- 28
MS24665-285	1-19- 13
MS24665-285	1-21- 40
MS24665-285	1-24- 19
MS24665-287	1-25- 59
MS24665-5	1-17-
MS24665-5	1-17-
MS24665-5	1-18-
MS24665-5	1-18-
MS24665-5	1-22-
MS24665-5	1-22-
MS24665-5	1-23-
MS24665-5	1-23-
MS25041-1-328	1-5- 14
MS25041-1-328	1-5- 27
MS25041-1-328	1-5- 38
MS25041-1-328	1-5- 52
MS25041-1-328	1-5- 64
MS25041-1-328	1-5- 74
MS25041-10-328	1-5- 13
MS25041-10-328	1-5- 26
MS25041-10-328	1-5- 36
MS25041-10-328	1-5- 50
MS25041-10-328	1-5- 62
MS25041-10-328	1-5- 73
MS25041-4-328	1-5- 12
MS25041-4-328	1-5- 25
MS25041-4-328	1-5- 34
MS25041-4-328	1-5- 48
MS25041-4-328	1-5- 60
MS25041-4-328	1-5- 72
MS25237-328	1-5-
MS25237-328	1-5-
MS25237-328	1-5-
MS25237-328	1-5-
MS25237-328	1-5-
MS25237-328	1-5-
MS25237-328	1-5- 35
MS25237-328	1-5- 37
MS25237-328	1-5- 39
MS25237-328	1-5- 49
MS25237-328	1-5- 51
MS25237-328	1-5- 53
MS25237-328	1-5- 61
MS25237-328	1-5- 63
MS25237-328	1-5- 65
MS25237-328	1-5-
MS25237-328	1-5-
MS25237-328	1-5-
MS3057-10A	1-4-
MS3057-10A	1-4-
MS3057-12	2-3-
MS3057-12A	1-4-
MS3106A-20-27S	2-3-
MS35459-14	1-25-
MS35489-2S	3-4- 8
MS35489-2S	3-4- 20
MS525-10R9	1-21- 15
NAS1329-08-120	1-3- 14
NAS1329-08-120	1-11- 8
NAS1329-08-120	2-3- 7A
NAS1329-08-120	2-4- 4A
NAS1329A08	5-1-
NAS1329A08-75	5-1-
NAS1329C06K120	1-1- 10
NAS221-22	3-3- 3
NAS345-10	3-1- 3
NAS388-6-18F	4-3- 51
NAS395-11-3	4-2- 22
NAS395-11-3	4-2- 24
NAS395-14-3	2-3-
NAS395-16-3	1-2- 14

PART NUMBER	FIGURE AND INDEX NO.
NAS395-16-3	1-4- 8
NAS395-6-3	1-7- 38
NAS397-14	5-1- 26
NAS397-16	5-1- 4
NAS397-16	5-1- 10
NAS397-16	5-1- 18
NAS42DD6-8	4-2- 20
NAS42DD8-12	1-16- 19
NAS42DD8-12	1-16- 26
NAS42DD8-12	1-21- 31
NAS42DD8-12	1-21- 38
NAS43-3-15	1-20- 14
NAS43-3-15	1-25- 14
NAS43DD1-16	4-1-
NAS43DD1-20	4-1-108
NAS43DD1-60	4-1-107
NAS43DD3-32	1-7- 30
NAS43DD3-48	1-20-
NAS43DD5-32	1-2- 8A
NAS446-1-3	4-3- 43
NAS446-2-3	1-1-
NAS446-2-3	1-7-
NAS446-2-3	1-8-
NAS446-2-3	1-10-
NAS446-2-3	2-1- 3
NAS446-2-3	2-3-
NAS446-2-3	2-3-
NAS446-2-3	4-2- 17
NAS446-2-3	4-3- 4
NAS446-4-3	1-2-
NAS446-4-3	1-3- 4
NAS446-4-3	1-6-
NAS446-4-3	2-2-
NAS446-4-3	2-3-
NAS446-4-3	4-2- 4
NAS446-4-3	4-2- 14
NAS446-4-3	5-2- 2
NAS487-20	1-4-
NAS487-20	1-10-
NAS557-10A	1-12- 26
NAS679AD8	3-4- 22
NAS679AO8	3-4- 11
NAS679AO6	1-2- 10
NAS679AO6	1-2-12B
NAS679AO6	1-2-14A
NAS679AO6	1-4- 4
NAS679AO6	1-4- 9
NAS679AO6	1-4- 15
NAS679AO6	1-5-
NAS679AO6	1-9- 5
NAS679AO6	1-9- 19
NAS679AO6	1-9- 24
NAS679AO6	1-9- 40
NAS679AO6	1-10-
NAS679AO6	1-10- 20
NAS679AO6	1-11- 10
NAS679AO6	1-12- 4
NAS679AO6	1-12- 19
NAS679AO6	1-13- 2
NAS679AO6	1-13- 8
NAS679AO6	1-14- 4
NAS679AO6	1-15- 4
NAS679AO6	1-16- 4
NAS679AO6	1-16- 43
NAS679AO6	1-17- 17
NAS679AO6	1-18- 4
NAS679AO6	1-18- 17
NAS679AO6	1-19- 22
NAS679AO6	1-19- 26
NAS679AO6	1-20- 3
NAS679AO6	1-21- 5
NAS679AO6	1-23- 5
NAS679AO6	1-25- 5

PART NUMBER	FIGURE AND INDEX NO.
NAS679AO6	4-3- 16
NAS679AO6	4-3- 29
NAS679AO6	4-3- 52
NAS679AO6	4-3- 60
NAS679AO8	1-2-15D
NAS679AO8	1-3- 15
NAS679AO8	1-3- 18
NAS679AO8	1-3- 21
NAS679AO8	1-3- 26
NAS679AO8	1-3- 30
NAS679AO8	1-3- 36
NAS679AO8	1-4- 12
NAS679AO8	1-7- 9
NAS679AO8	1-7- 13
NAS679AO8	1-7- 18
NAS679AO8	1-7- 23
NAS679AO8	1-7- 26
NAS679AO8	1-7- 31
NAS679AO8	1-9- 9
NAS679AO8	1-9-
NAS679AO8	1-9- 27
NAS679AO8	1-9-
NAS679AO8	1-9-
NAS679AO8	1-9-
NAS679AO8	1-10-
NAS679AO8	1-10-
NAS679AO8	1-11- 16
NAS679AO8	1-11- 21
NAS679AO8	1-12-
NAS679AO8	1-12- 16
NAS679AO8	1-13- 27
NAS679AO8	1-15- 36
NAS679AO8	1-20- 28
NAS679AO8	2-1-
NAS679AO8	2-2- 14
NAS679AO8	2-2- 17
NAS679AO8	2-3- 17
NAS679AO8	2-3- 21
NAS679AO8	2-4- 6
NAS679AO8	2-4- 12
NAS679AO8	2-4- 15
NAS679AO8	2-4- 19
NAS679AO8	2-4- 23
NAS679AO8	3-1- 13
NAS679AO8	4-1-
NAS679AO8	4-2- 31
NAS679AO8	4-2- 35
NAS679AO8	4-2- 41
NAS679AO8	4-2- 48
NAS679AO8	4-3-
NAS679AO8	4-3-
NAS679AO8	4-3-
NAS679AO8	4-4- 9
NAS679AO8	5-1-
NAS679AO8	5-1-
NAS679AO8	5-1-
NAS679AO8	5-2- 4
NAS679A3	1-14- 13
NAS679A3	1-16- 24
NAS679A3	1-19- 4
NAS679A3	1-21- 16
NAS679A3	1-21- 36
NAS679A3	1-24- 11
NAS679A3	1-24- 39
NAS679A3	1-25- 39
NAS679A3	1-25- 45
NAS679A3	1-25- 48
NAS679A3	2-4- 26
NAS679A3	3-2- 3
NAS679A3	3-2- 12
NAS679A3	3-2- 21
NAS679A3	3-2- 28
NAS679A3	3-2- 37

PART NUMBER	FIGURE AND INDEX NO.
NAS679A3	3-2- 43
NAS679A3	3-3- 6
NAS679A3	3-4- 4
NAS679A3	3-4- 17
NAS679A3	5-1-
NAS679A4	1-15- 12
NAS679A4	1-17-
NAS679A4	1-18-
NAS679A4	1-21- 48
NAS679A4	1-22-
NAS679A4	1-23-
NAS679A5	1-14- 18
NAS679A5	1-24- 23
NAS679A5C	1-19- 16
NAS686AO8	3-1-
NAS686AO8	3-1-
NAS686AO8K	4-1-
NAS696AO8	1-13- 40
NAS696AO8	1-21- 63
NAS697AO6	1-13- 12
NAS697AO6	1-22- 5
NAS697AO6	1-24- 5
NAS697AO6	4-1-
NAS697AO6	4-1-
NAS697AO6	4-1-
NAS697AO6	4-1-
NAS697AO6L	5-2- 8
NAS697AO8	1-2- 6
NAS697AO8	1-13- 39
NAS697AO8	1-15- 30
NAS697AO8	1-15- 31
NAS697AO8	1-16- 38
NAS697AO8	1-16- 39
NAS697AO8	1-21- 62
NAS697A3	3-3- 10
NAS70-177-500	1-15- 35
PJ-068	4-3- 62
RG-174/U	1-3-
RG-58A/U	1-2-
RG-58A/U	1-3-
RG-58A/U	1-4-
RG-58A/U	1-4-
RG-58A/U	1-4-
RG-58A/U	1-4-
RG-58A/U	1-4-
RG-58A/U	1-4- 44
RG-58A/U	1-4-
RG-58A/U	1-4- 48
RG-58A/U	1-5-
RG-58A/U	1-7-
RG-58A/U	1-9-
RG-58A/U	1-9-
RG-58A/U	1-10-
RG-58A/U	1-10-
RG-58A/U	1-10-
RG-58A/U	1-10-
RG-58A/U	1-10-
RG-58A/U	1-10-
RG-58A/U	1-11-
RG-58A/U	1-12-
RG-58A/U	1-12-
RG-58A/U	2-1-
RG-58A/U	2-2-
RG-58A/U	2-2-
RG-58A/U	2-2- 35
RG-58A/U	2-2- 38
RG-58A/U	2-4-
RG-58A/U	2-3-
RG-58A/U	2-3-
RG-58A/U	2-3-
RG-58A/U	2-3- 48
S-1053ET	5-1- 81

PART NUMBER	FIGURE AND INDEX NO.
S-1053ET	5-1- 83
S-1053ET	5-1- 87
S-1053ET	5-1- 94
S-1053ET	5-1-101
S-1053E7T	5-1- 31
S-1053E7T	5-1- 34
S-1053E7T	5-1- 37
S-1053E7T	5-1- 44
S-1053E7T	5-1- 48
S-1053E7T	5-1- 51
S-1053E7T	5-1- 54
S-1053E7T	5-1- 96
S-1053E7T	5-1- 98
S-1053E7T	5-1-104
S-1053E7T-18.0	5-1- 58
S-1053E7T56.0	5-1- 63
S-1053E7T56.0	5-1- 66
S-1053E7T56.0	5-1- 69
S-1053E7T56.0	5-1- 72
S-1693-2	5-1- 32
S-1693-2	5-1- 35
S-1693-2	5-1- 38
S-1693-2	5-1- 45
S-1693-2	5-1- 49
S-1693-2	5-1- 52
S-1693-2	5-1- 55
S-1693-2	5-1- 59
S-1693-2	5-1- 64
S-1693-2	5-1- 67
S-1693-2	5-1- 70
S-1693-2	5-1- 73
S-1693-2	5-1- 75
S-1693-2	5-1- 82
S-1693-2	5-1- 84
S-1693-2	5-1- 88
S-1693-2	5-1- 95
S-1693-2	5-1- 97
S-1693-2	5-1- 99
S-1693-2	5-1-102
S-1693-2	5-1-105
S-1694-3-0.5	1-5-
S-1696-2	1-5- 66
S-1696-2	1-5- 75
S-1838-3	1-5-
SS48151	4-1-
SC-239	3-6-
S1021A6-6	4-3-
S1021Z-8	3-2- 46
S1021Z4-4	4-2- 25
S1021Z4-4	4-3- 42
S1021Z6-5	4-2- 16
S1021Z6-6	1-5- 23
S1021Z6-6	1-10-
S1021Z6-6	2-1- 2
S1021Z6-6	2-3-
S1021Z6-6	4-3- 3
S1021Z6-8	1-13- 43
S1021Z6-8	3-2- 30
S1021Z6-8	5-1-
S1021Z6-8	5-1-
S1021Z8-10	3-5- 2
S1021Z8-10	3-5- 11
S1021Z8-6	1-6-
S1021Z8-6	1-9- 13
S1021Z8-6	2-2-
S1021Z8-6	3-2- 5
S1021Z8-6	4-2- 3
S1021Z8-6	4-2- 19
S1021Z8-8	2-3-
S1021Z8-8	2-3-
S1021Z8-8	3-2- 14
S1021Z8-8	3-2- 23
S1021Z8-8	3-2- 39

PART NUMBER	FIGURE AND INDEX NO.
S1021Z8-8	4-2- 13
S1022F8-8	1-21- 52
S1022Z6-6	1-1-
S1022Z6-6	1-8-
S1022Z6-6	2-3-
S1022Z6-8	1-7-
S1022Z8-8	1-2-
S1022Z8-8	1-2- 15
S1022Z8-8	1-3- 3
S1022Z8-8	1-4- 6
S1022Z8-8	1-13- 30
S1022Z8-8	1-15- 15
S1022Z8-8	1-16- 16
S1022Z8-8	1-21- 57
S1047-2-3.00	4-2-
S1050-1-3.90	1-13- 34
S1050-1-3.90	1-15- 25
S1050-1-3.90	1-16- 33
S1053E7T	5-1- 3
S1053E7T	5-1- 9
S1053E7T	5-1- 17
S1071-1-36.0	1-25- 66
S1090-11	1-5- 9
S1090-13	2-2-
S1090-2	1-3- 8
S1090-3	2-1- 20
S1090-4	1-4- 32
S1090-4	2-2- 28
S1090-5	1-5- 8
S1090-9	2-2-
S1091-15	1-4- 31
S1091-15	2-1- 19
S1091-15	2-2-
S1091-5	1-3- 7
S1102-1	4-3- 5
S1102-1	4-3-
S1102-1	4-3-
S1102-1	4-3- 17
S1102-1	4-3- 22
S1102-1	4-3-
S1102-1	4-3- 37
S1102-1	4-3-
S1102-1	4-3- 48
S1102-1	4-3- 53
S1130-1	1-25- 65
S1131-1	1-25-
S1137-1	1-25- 64
S1154-1	1-9- 12
S1196-1	4-3-
S1196-1	4-3-
S1196-1	4-3-
S1196-1	4-3-
S1196-1	4-3- 24
S1196-1	4-3-
S1196-1	4-3-
S1196-1	4-3-
S1196-1	4-3-
S1196-1	4-3- 55
S1196-2	4-3-
S1196-2	4-3-
S1196-2	4-3-
S1196-2	4-3- 18
S1196-2	4-3- 23
S1196-2	4-3-
S1196-2	4-3- 38
S1196-2	4-3-
S1196-2	4-3-
S1196-2	4-3- 54
S1216-3	1-5- 17
S1216-3	1-5- 30
S1216-3	1-5- 45
S1216-3	1-5- 80
S1216-3	1-6-

PART NUMBER	FIGURE AND INDEX NO.
S1216-3	4-1- 5
S1216-3	4-1- 24
S1216-3	4-1- 45
S1216-3	4-1- 65
S1216-3	4-1- 87
S1216-3	4-1-111
S1282-4	3-5- 6
S1282-4	3-5- 15
S1282-4	3-6- 7
S1282-4	3-6- 15
S1360-10	1-5- 10
S1360-10	1-6- 2
S1360-10	1-7- 53
S1360-10	1-13- 13
S1360-10	1-14- 8
S1360-10	1-15- 32
S1360-10	1-16- 40
S1360-10	1-17- 18
S1360-10	1-18- 18
S1360-10	1-21-
S1360-10	1-22-
S1360-10	1-24- 6
S1360-10	2-3- 34
S1360-15	1-2- 29
S1360-15	1-4- 33
S1360-15	1-7- 52
S1360-15	2-2- 29
S1360-2	1-1- 16
S1360-2	1-3- 6
S1360-2	1-5- 7
S1360-2	1-8- 6
S1360-2	1-11- 24
S1360-5	1-1- 15
S1360-5	1-3- 5
S1360-5	1-6- 3
S1360-5	1-8- 5
S1360-5	1-9- 50
S1360-5	1-10- 27
S1360-5	1-11- 23
S1360-5	1-12- 5
S1360-5	1-20- 25
S1360-5	1-25- 75
S1360-5	2-1- 21
S1360-5	4-1- 6
S1360-5	4-1- 25
S1360-5	4-1- 46
S1360-5	4-1- 66
S1360-5	4-1- 88
S1360-5	4-1-113
S1360-8	1-2- 30
S1360-8	1-4- 34
S1367-1-10	1-5-
S1367-1-10	1-7-
S1367-1-10	3-5- 8
S1367-1-10	3-5- 17
S1367-1-10	3-6- 3
S1367-1-12	1-5- 19
S1367-1-12	1-5- 32
S1367-1-12	1-5- 43
S1367-1-12	1-5- 57
S1367-1-12	1-5- 69
S1367-1-4	1-11-
S1367-1-8	3-6- 12
S1367-2-8	1-5-
S1367-3-8	1-8-
S1390-5	1-2- 25
S1390-5	1-2-28C
S1390-5	1-2-28E
S1390-5	1-3- 43
S1390-5	1-4- 25
S1390-5	1-6-
S1390-5	1-7- 45
S1390-5	1-8- 20

PART NUMBER	FIGURE AND INDEX NO.
S1696-2	1-5- 28
S1696-2	1-5- 40
S1696-2	1-5- 54
S1697-1	4-1- 4
S1697-1	4-1- 8
S1697-1	4-1- 40
S1697-1	4-1- 58
S1697-1	4-1- 78
S1697-1	4-1-100
S1732-1	5-2- 9
S1753-6	1-2- 27
S1753-6	1-3- 45
S1753-6	1-3- 49
S1753-6	1-4- 26
S1753-6	1-4- 30
S1753-6	1-6-
S1753-6	1-6-
S1753-6	1-7- 46
S1753-6	1-7- 51
S1753-6	1-9- 60
S1753-6	2-3- 41
S1753-7	1-2-28A
S1753-7	1-3- 47
S1753-7	1-4-28A
S1753-7	1-6-
S1753-7	1-7- 49
S1753-7	1-8- 22
S1753-7	1-9- 58
S1753-7	1-10- 31
S1753-7	2-3- 44
S1780-4	1-2-
S1780-4	1-3-
S1780-4	1-4- 27
S1780-4	1-6-
S1780-4	1-7- 47
S1780-4	2-3- 42
S1813-1	4-1- 92
S1813-2	4-1- 10
S1813-2	4-1- 32
S1813-2	4-1- 50
S1813-2	4-1- 70
S1832-1	1-2-
S1832-1	1-3-
S1832-1	1-4-
S1832-1	1-7-
S1832-1	1-8-
S1832-1	1-9-
S1832-1	1-10-
S1832-2	1-4-
S1836-1	4-1- 17
S1836-1	4-1- 39
S1836-1	4-1- 57
S1836-1	4-1- 77
S1836-1	4-1- 99
S1837-1	1-5-
S1837-1	1-5-
S1837-1	1-5-
S1837-1	1-5-
S1837-1	1-5-
S1837-1	1-6-
S1837-1	4-1- 19
S1837-1	4-1-
S1837-1	4-1-
S1837-1	4-1- 41
S1837-1	4-1-
S1837-1	4-1- 59
S1837-1	4-1-
S1837-1	4-1- 79
S1837-1	4-1-
S1837-1	4-1-
S1837-1	4-1-102
S1837-1	4-1-
S1838-1	1-5-

PART NUMBER	FIGURE AND INDEX NO.
S1838-1	1-5-
S1838-1	1-5-
S1838-1	1-5-
S1838-1	1-5-
S1838-1	1-6-
S1838-1	1-7-
S1838-1	1-14-
S1838-1	1-16-
S1838-1	1-17-
S1838-1	1-18-
S1838-1	1-19-
S1838-1	1-20-
S1838-1	4-1- 11
S1838-1	4-1- 33
S1838-1	4-1- 51
S1838-1	4-1- 71
S1838-1	4-1- 93
S1838-2	1-4-
S1838-2	1-7-
S1838-2	1-9-
S1838-2	1-10-
S1838-2	2-3-
S1838-2	4-1- 15
S1838-2	4-1- 37
S1838-2	4-1- 55
S1838-2	4-1- 75
S1838-2	4-1- 97
S1838-3	1-5-
S1838-3	1-5-
S1838-3	1-5-
S1838-3	1-5-
S1838-3	1-6-
S1838-3	1-7-
S1838-3	4-1- 13
S1838-3	4-1- 35
S1838-3	4-1- 53
S1838-3	4-1- 73
S1838-3	4-1- 95
S1880-1	1-2- 22
S1880-1	1-3- 40
S1880-1	1-4- 22
S1880-1	2-1- 22
S1880-1	2-2- 30
S1880-1	2-3- 37
S1880-3	1-2- 28
S1880-3	1-2-28B
S1880-3	1-3- 46
S1880-3	1-4- 28
S1880-3	1-6-
S1880-3	1-7- 48
S1880-3	1-8- 21
S1880-3	1-9- 53
S1880-3	1-9- 57
S1880-3	1-10- 30
S1880-3	2-3- 43
S1880-5	1-2-28C
S1880-5	1-9- 55
S1915-1	5-2-
S1918-1	1-2- 23
S1918-1	1-3- 41
S1918-1	1-4- 23
S1918-1	2-1- 23
S1918-1	2-2- 31
S1918-1	2-3- 38
S225-2	1-19- 19
S225-4F	1-13- 29
S225-4F	1-15- 14
S225-4F	1-16- 15
S225-4F	1-21- 51
S225-4F	1-21- 56
S226-2	1-19- 18
S226-5F	1-13- 28
S226-5F	1-15- 13

PART NUMBER	FIGURE AND INDEX NO.
S226-5F	1-16- 14
S226-5F	1-21- 50
S226-5F	1-21- 55
S338-1	1-25- 51
S339-1	1-25-
S350	3-1- 5
S350	3-3- 5
S350	4-2- 8
S355	1-3- 28
S355	1-7- 12
S355	1-9- 23
S355	1-11- 15
S355	2-3- 16
S355	2-3- 20
S355	2-4- 18
S355	2-4- 22
S355-2	1-7- 8
S355-2	1-7- 17
S378-1	1-20- 13
S378-1	1-25- 13
S378-3L	1-13- 24
S378-3L	1-15- 9
S378-3L	1-16- 10
S378-3L	1-21- 44
S392-3	1-13- 5
S394	1-25- 56
T12MP-12A	2-3- 3
UG-1050/U	1-4-
UG-1050/U	1-4-
UG-1050/U	1-4-
UG-1051/U	1-4-
UG-274/U	1-4- 50
UG-274/U	2-2- 40
UG-274/U	2-3- 45
UG-290/U	3-6-
UG-291/U	1-4-
UG-291/U	1-4-
UG-291/U	2-2-
UG-291/U	2-2-
UG-291/U	2-3-
UG-291/U	3-2- 8
UG-291/U	3-2- 16
UG-291/U	3-2- 33
UG-291/U	3-2- 48
UG-88C/U	1-4-
UG-88C/U	1-4-
UG-88C/U	1-4-
UG-88C/U	1-4-
UG-88C/U	1-4-
UG-88C/U	1-4-
UG-88C/U	1-4-
UG-88C/U	1-4- 49
UG-88C/U	1-5-
UG-88C/U	1-9- 49
UG-88C/U	1-10-
UG-88C/U	1-10-
UG-88C/U	1-10-
UG-88C/U	1-10-
UG-88C/U	1-10-
UG-88C/U	1-10- 41
UG-88C/U	1-11-
UG-88C/U	1-12-
UG-88C/U	1-12-
UG-88C/U	2-2- 36
UG-88C/U	2-3-
UG-88C/U	2-3-
UG-88C/U	3-2- 32
UG-88C/U	2-3- 49
UG-88C/U	2-4-
UG-88C/U	3-2- 7
UG-89/U	1-4-
UG-89/U	1-4-
UG-89/U	1-4- 45

PART NUMBER	FIGURE AND INDEX NO.
UG-89/U	1-4- 47
UG-89/U	1-10-
UG-89/U	1-10-
UG-89/U	1-10-
UG-89/U	1-10-
UG-89/U	2-2- 39
UG-89/U	2-3- 47
UG-89/U	3-2- 25
UG-913/U	1-2-
UG-913/U	1-4-
UG-913/U	1-9-
UG-913U	2-1-
UG-913/U	2-3-
UGR-2	2-4- 1
VOA-8	2-3- 23
VOA-9	2-3- 22
W-106A	3-6- 13
W-106A	3-5- 5
W-106A	3-5- 14
W-106A	3-6- 4
X-100	3-1- 8
X-88	3-1- 6
024-0001-00	1-6- 8
030-0005-00	2-2-
030-0020-01	1-6-
030-0024-00	1-6- 9
030-0028-00	2-2-
030-0028-00	2-2-
030-0060-00	1-3-
030-1008-00	2-1-
030-1009-00	2-1-
030-1010-00	2-1-
030-2000-00	2-1-
030-2000-00	2-2-
030-2000-00	2-2-
030-2002-00	2-1-
030-2002-00	2-2-
030-2043-00	1-6-
030-2044-00	2-2-
030-2102-00	1-3-
030-2107-00	1-3-
030-2109-00	1-3-
0411059-3	2-3- 9
0411059-3	2-4- 7
0411547-1	1-3- 19
0411547-1	2-1- 9
0411547-1	2-2- 15
0411547-1	2-4- 13
0411547-2	1-3- 16
0411547-2	2-1- 10
0411547-2	2-2- 12
0411547-2	2-4- 10
0411686	3-5- 7
0411686	3-5- 16
0411686	3-6- 6
0411686	3-6- 14
0411783	1-25- 57
0411968-1	4-3- 13
0412011-1	2-1- 12
0412011-1	2-2- 11
0412011-2	2-4- 9
0412012-1	2-1- 11
0412012-1	2-2- 10
0412012-1	2-3- 4
0412013-1	1-11- 12
0413126-5	1-2- 24
0413126-5	1-2- 26
0413126-5	1-3- 42
0413126-5	1-3- 44
0413126-5	1-4- 24
0413126-5	1-6-
0413126-5	1-6-
0413126-5	1-7- 44

PART NUMBER	FIGURE AND INDEX NO.
0413126-5	1-8- 19
0413126-5	1-9- 51
0413126-5	1-10- 28
0413126-5	2-1- 24
0413126-5	2-2- 32
0413126-5	2-3- 39
0413464-1	4-3- 6
0413467-4	4-1- 3
0431016-1	3-2- 29
047-1010-00	2-1- 5
047-1744-01	1-3- 11
0470103-1	1-3- 22
0470107-1	4-2- 5
0470400-238	1-5- 11
0470412-3	1-5- 22
0470413-3	1-5- 24
0500062	5-2- 11
0511104-19	3-5- 1
0511104-19	3-5- 10
0512006-1	1-13- 41
0522629-1	1-17-
0522629-1	1-18-
0522629-1	1-22-
0522629-1	1-23-
0570004-1	2-3-
0570013-1	3-2- 6
0570013-3	3-2- 31
0570026-1	3-2- 4
0570026-1	3-2- 13
0570033-1	5-1- 5
0570084-1	4-1- 8
0570084-1	4-1- 30
0570084-1	4-1- 48
0570084-1	4-1- 68
0570084-2	4-1- 90
0570400-2003	1-5-
0570400-2005	1-6- 10
0570400-299	1-5- 21
0700196-1	1-15- 41
0713291-1	4-3- 56
0713739-1	1-16- 5
0713739-1	1-17- 5
0713739-1	1-18- 5
0713739-1	1-19- 27
0713739-1	1-21- 2
0713739-1	1-22- 2
0713739-1	1-23- 2
0713739-1	1-24- 2
0713750-1	1-21-
0713750-4	1-24-
0713750-6	1-22-
0713813-3	3-3- 14
0713917-8	4-1- 64
0713917-9	4-1- 63
0760117-1	1-16- 22
0760117-1	1-21- 34
0760117-2	1-16- 20
0760117-2	1-16- 27
0760117-2	1-21- 32
0760117-2	1-21- 39
0760705-1	1-16- 17
0760705-1	1-21- 29
0770038-2	5-2- 1
0770039-1	4-4-
0770039-1	4-4-
0770039-2	4-4- 1
0770039-2	4-4- 4
0770039-3	4-4- 2
0770039-3	4-4- 5
0770049-1	1-3- 27
0770049-1	1-7- 15
0770049-1	2-3- 14
0770049-1	2-4- 20

PART NUMBER	FIGURE AND INDEX NO.
0770093-1	1-5- 47
0770105-1	4-3- 57
0770110-1	3-2- 45
0770110-2	3-2- 44
0770400-271	1-15- 40
0770400-279	1-5-
0770400-285	1-5- 46
0770622-1	5-2- 5
0770641-1	5-1- 2
0770641-1	5-1- 8
0770641-1	5-1- 16
0770641-1	5-1- 39
0770641-1	5-1- 57
0770641-1	5-1- 77
0770641-1	5-1- 90
0770641-1	5-1-107
0770681-1	3-4-
0770681-1	3-4-
0770681-2	3-4- 1
0770681-2	3-4- 14
0770681-3	3-4- 2
0770681-3	3-4- 16
0770681-7	3-4- 15
0770698-1	1-21- 7
0770699-1	1-21- 11
0770700-4	1-21- 18
0770701-1	1-21- 12
0770701-2	1-21- 13
0770702-1	1-21- 23
0770702-12	1-22- 9
0770702-12	1-24- 24
0770702-14	1-22- 14
0770702-14	1-23- 14
0770702-14	1-24- 29
0770702-3	1-21- 14
0770712-1	1-3- 31
0770712-1	1-7- 14
0770713-1	1-3- 23
0770713-1	1-7- 10
0770713-1	1-9- 21
0770713-1	1-11- 13
0770713-1	2-3- 18
0770713-1	2-4- 16
0770729-1	5-1- 25
0770730-2	4-2- 7
0770731-1	4-2- 1
0770732-5	4-2- 21
0770732-6	4-2- 23
0770732-7	4-2-
0770732-8	4-2-
0770735-1	1-7- 34
0770735-2	1-7- 35
0770762-12	1-23- 9
0861520-1	1-25- 36
0861520-1	1-25- 42
1000 OHM, 1/4W	2-4-
11337	1-12-
1200016-1	1-14- 15
1200016-1	1-19- 12
1200016-1	1-24- 18
1200027-1	1-14- 11
1200027-1	1-19- 3
1200027-1	1-24- 9
1200096-1	3-3- 2
1200096-1	3-3- 8
1200096-1	3-3- 12
1200098-1	3-3- 1
1200098-1	3-3- 7
1200098-2	3-3- 11
1200167-1	1-13- 33
1200167-1	1-15- 24
1200167-1	1-16- 32
1200167-1	1-21- 53

PART NUMBER	FIGURE AND INDEX NO.
1200168-1	1-13- 37
1200168-1	1-15- 28
1200168-1	1-16- 36
1200168-1	1-21- 60
1200169-1	1-13- 35
1200169-1	1-15- 26
1200169-1	1-16- 34
1200169-1	1-21- 58
1200180-1	1-13- 14
1200180-1	1-15- 16
1200182-1	1-13- 17
1200182-1	1-15- 19
1200182-1	1-16- 25
1200182-1	1-21- 37
1200182-2	1-13- 15
1200182-2	1-15- 17
1200182-2	1-16- 18
1200182-2	1-21- 30
1200182-9	1-13-
1200182-9	1-13- 19
1200182-9	1-15-
1200182-9	1-15- 21
1200183-1	1-13- 22
1200183-1	1-15- 7
1200183-1	1-16- 8
1200183-1	1-21- 45
1200735-1	1-19- 6
1200735-1	1-24- 12
1200735-2	1-19- 8
1200735-2	1-24- 14
1205-3C12D	4-1- 2
1211080-1	4-2- 36
1211081-1	4-2- 37
1211085-7	4-2- 43
1211086-1	4-2- 44
1212015-1	1-7- 36
1213005-2	4-1- 84
1213005-4	4-1- 85
1213064-1	4-1- 86
1213614-11	1-12- 25
1213904-1	1-9-31A
1213904-1	1-10-11A
1213904-2	1-11-18A
1213904-2	1-12-21A
1220091-1	1-17- 8
1220091-1	1-18- 8
1220091-1	1-22- 24
1220091-1	1-23- 24
1221087-12	1-14- 14
1221087-12	1-19- 11
1221087-12	1-24- 17
1250209-1	5-2- 12
1260095-1	1-17- 12
1260095-1	1-18- 12
1260095-1	1-22- 28
1260095-1	1-23- 28
1260442-1	1-21- 19
1260442-2	1-21- 17
1260651-1	1-22- 8
1260651-1	1-23- 8
1260651-1	1-24- 35
1260652-1	1-22- 19
1260652-1	1-23- 19
1260652-1	1-24- 38
1270012-1	3-2- 1
1270012-1	3-2- 10
1270012-1	3-2- 18
1270012-1	3-2- 35
1270012-1	3-2- 41
1270012-7	3-4-
1270012-8	3-2- 26
1270013-1	3-2- 15
1270013-1	3-2- 24

PART NUMBER	FIGURE AND INDEX NO.
1270013-1	3-2- 40
1270013-1	3-2- 47
1270042-1	3-1- 1
1270042-2	3-1- 2
1270043-1	3-1- 7
1270049-10	1-17- 10
1270049-10	1-18- 10
1270049-10	1-22- 26
1270049-10	1-23- 26
1270049-9	1-17- 9
1270049-9	1-18- 9
1270049-9	1-23- 25
1270055-1	4-3- 50
1270056-1	1-9- 3
1270056-1	1-12- 3
1270058-1	4-2- 26
1270735-1	1-14- 21
1270422-1	3-6- 1
1270422-2	3-6-
1270444-1	3-6- 2
1270444-1	3-6- 10
1270444-2	3-6-
1270465-1	1-2-12A
1270465-1	1-4- 13
1270465-1	1-9- 10
1270465-3	1-2- 13
1270465-3	1-4- 5
1270465-4	1-2- 9
1270468-3	4-3- 41
1270475-204	1-5- 59
1270475-296	1-5-
1270627-56	2-3- 12
1270627-56	2-4- 24
1270627-57	1-11- 17
1270627-57	1-12- 20
1270627-85	2-3- 10
1270627-86	2-3- 11
1270627-89	1-7- 19
1270627-91	1-9- 30
1270627-91	1-10- 10
1270638-1	4-3- 21
1270638-1	4-3- 61
1270659-1	1-3- 33
1270659-2	1-3- 32
13B	2-3-
13B	2-3-
13E	2-3-
135-40	3-5- 9
135-40	3-5- 18
135-40	3-6- 5
135-40	3-6- 11
1422023-1	1-20- 9
1422023-1	1-25- 8
1422023-2	1-20- 10
1422023-2	1-25- 9
1422023-3	1-20- 11
1422023-3	1-25- 10
14276	4-2- 28
1460326-1	1-25- 32
1462000-2	1-20- 17
1462000-2	1-25- 17
1470008-3	3-1- 21
1470060-1	3-2- 22
1470064-1	5-1- 24
1470066-12	1-25- 53
1470066-14	1-25- 49
1470066-23	1-20- 4
1470066-23	1-25- 2
1470066-24	1-20- 5
1470066-24	1-25- 3
1470066-26	1-25- 27
1470066-32	1-25- 35
1470066-33	1-25- 34

PART NUMBER	FIGURE AND INDEX NO.
1470066-34	1-25- 40
1470066-35	1-25- 41
1470066-50	1-25- 62
1470066-54	1-25- 31
1470066-55	1-25- 50
1470066-58	1-25- 63
1470066-9	1-20-
1470067-4	1-20- 12
1470082-4	3-5- 19
1470114-3	3-1- 17
1470125-1	3-5- 20
1470201-4	1-4-
1470201-5	4-1-106
1470219-1	5-1- 1
1470219-1	5-1- 7
1470219-1	5-1- 15
1470219-1	5-1- 40
1470219-1	5-1- 56
1470219-1	5-1- 76
1470219-1	5-1- 89
1470219-1	5-1-106
1470220-1	5-1- 12
1470220-1	5-1- 20
1470220-4	5-1- 21
1470220-5	5-1- 23
1470220-8	5-1- 11
1470220-8	5-1- 22
1470221-2	5-1- 6
1470221-2	5-1- 13
1470222-1	5-1- 14
1488-4	1-2- 36
150-0038-00	5-1- 27
150-0038-00	5-1- 74
1511005-1	1-1- 7
1511005-1	1-8- 11
1511099-2	3-1-
1511099-3	3-1- 15
1512607-3	1-7- 37
1512607-4	1-7-
1513143-1	4-1-109
1513313-3	1-9- 36
1513313-3	1-10- 16
1513627-1	4-3- 46
1513629-1	1-9- 32
1513629-1	1-10- 12
1513629-10	1-7- 21
1513629-8	1-12- 12
1513635-1	1-9- 34
1513635-1	1-10- 14
1513635-8	1-7- 24
1513662-20	1-12- 14
1513722-1	1-11- 19
1560008-1	1-25- 29
1560008-2	1-20- 18
1560008-2	1-25- 18
1560008-6	1-25- 30
1560111-1	1-25- 12
1570001-2017	1-5-
1570001-223	1-5- 71
1570014-2	3-1-
1570014-3	3-1- 19
1570164-1	1-2- 21
1570164-1	1-3- 48
1570164-1	1-4- 29
1570164-1	1-6-
1570164-1	1-7- 50
1570164-1	1-8- 23
1570164-1	1-9- 59
1570164-1	1-10- 32
1570192-1	3-1-
1570192-2	3-1-
1570193-1	3-1-
1570193-2	3-1-

PART NUMBER	FIGURE AND INDEX NO.
1570197-1	1-3- 34
1613281-1	4-3- 27
1670012-1	1-2- 3
1670012-2	1-2- 7
1670016-1	4-4- 6
1670020-1	1-9- 25
1670021-1	1-9- 6
1670022-1	4-3- 34
17005	1-7-
17008	1-7-
17025	1-7-
17027	1-7-
17028	1-7-
1706016-1	4-2- 15
1712097-2	3-4- 24
1712097-3	3-4- 23
1712130-1	1-7- 33
1712148-1	3-8- 2
1713125-1	1-2-15B
1713125-1	1-4- 10
1713126-1	1-5- 4
1713126-3	1-5- 5
1713240-1	5-1- 36
1713240-1	5-1- 46
1713240-1	5-1- 47
1713240-1	5-1- 65
1713240-1	5-1- 71
1713241-1	5-1- 33
1713241-1	5-1- 50
1713241-1	5-1- 53
1713241-1	5-1- 86
1713241-1	5-1-100
1713241-1	5-1-103
1713241-3	5-1- 68
1713242-1	5-1- 28
1713242-1	5-1- 41
1713242-1	5-1- 60
1713242-1	5-1- 78
1713242-1	5-1- 91
1713242-2	5-1-109
1713252-1	5-1- 85
1713252-1	5-1-108
1770000-209	1-14- 5
1770000-223	1-5- 33
1770000-243	1-5-
1770003-1	3-2- 38
1770012-1	4-1- 27
18397-0000	1-4-
18397-0000	1-4-
1910-E	4-1-112
24810-0100	3-4- 12
26360-0000	1-21- 6
26360-0100	1-13- 31
26360-0100	1-14- 9
26360-0100	1-15- 5
26360-0100	1-16- 6
26360-0100	1-17- 6
26360-0100	1-18- 6
26360-0100	1-19- 1
26360-0100	1-21- 27
26360-0100	1-22- 6
26360-0100	1-22- 22
26360-0100	1-23- 22
26360-0100	1-24- 7
26360-0100	1-24- 33
26360-0200	1-23- 6
28326-0005	1-13-
28326-0005	1-14-
28326-0005	1-15-
28326-0005	1-16-
28326-0005	1-17-
28326-0005	1-18-
28326-0005	1-19-

PART NUMBER	FIGURE AND INDEX NO.
28326-0005	1-21-
28326-0005	1-22-
28326-0005	1-23-
28326-0005	1-24-
28326-0005	1-25-
28326-0007	1-21-
28326-0007	1-22-
28326-0007	1-23-
28326-0007	1-24-
28326-0007	1-25-
28326-0009	1-13-
28326-0009	1-13- 48
28326-0009	1-14-
28326-0009	1-15-
28326-0009	1-15-
28326-0009	1-16-
28326-0009	1-16-
28326-0009	1-17-
28326-0009	1-17-
28326-0009	1-18-
28326-0009	1-19-
28326-0009	1-19-
28326-0009	1-20-
28326-0009	1-21-
28326-0009	1-21-
28326-0009	1-21-
28326-0009	1-22-
28326-0009	1-22-
28326-0009	1-22-
28326-0009	1-23-
28326-0009	1-23-
28326-0009	1-23-
28326-0009	1-24-
28326-0009	1-24-
28326-0009	1-24-
28326-0009	1-25-
28326-0009	1-25-
28336	1-13-
28336	1-15-
28336	1-16-
28336	1-16-
28336	1-17-
28336	1-17-
28336	1-18-
28336	1-18-
28336	1-19-
28336	1-19-
28336	1-20-
28336	1-20-
28336-0000	1-14-
28336-0009	1-18-
28371-0005	1-13-
28371-0005	1-14-
28371-0005	1-15-
28371-0005	1-16-
28371-0005	1-17-
28371-0005	1-18-
28371-0005	1-19-
28371-0005	1-20-
28371-0005	1-21-
28371-0005	1-22-
28371-0005	1-23-
28371-0005	1-24-
28371-0005	1-25-
28371-0007	1-21-
28371-0007	1-21-
28371-0007	1-22-
28371-0007	1-22-
28371-0007	1-23-
28371-0007	1-23-
28371-0007	1-24-
28371-0007	1-24-
28371-0007	1-25-

PART NUMBER	FIGURE AND INDEX NO.
28371-0007	1-25-
28371-0009	1-5-
28371-0009	1-5-
28371-0009	1-5- 44
28371-0009	1-5- 58
28371-0009	1-5- 70
28371-0009	1-5- 79
28371-0009	1-13-
28371-0009	1-14-
28371-0009	1-15-
28371-0009	1-16-
28371-0009	1-17-
28371-0009	1-18-
28371-0009	1-19-
28371-0009	1-20-
28371-0009	1-22-
28371-0009	1-23-
28371-0009	1-24-
28371-0009	1-25-
28460	1-15-
28460	1-16-
28487	1-5- 78
28505-0009	1-13-
28505-0009	1-14- 29
28505-0009	1-15-
28505-0009	1-16-
28505-0009	1-17-
28505-0009	1-18-
28505-0009	1-19-
28505-0009	1-21-
28505-0009	1-21-
28505-0009	1-22-
28505-0009	1-23-
28505-0009	1-24-
28776-0000	1-12-
28900	1-15- 33
28900-0000	1-13- 9
28900-0000	1-14- 7
28900-0000	1-16- 41
28900-0000	1-17- 15
28900-0000	1-18- 15
28900-0000	1-19- 20
28900-0000	1-20- 26
29277-0000	1-1- 5
29410	1-13-
29410	1-14-
29410	1-15- 43
29410	1-16-
29410	1-17-
29410	1-18-
29410	1-19- 33
29410	1-20-
29510-0001	1-20- 7
29510-0001	1-25- 7
29510-0401	1-25- 25
29747-0018	1-2- 33
29747-0026	1-4-
29752	1-2- 35
29753	1-2- 34
30370-0100	1-13- 50
30370-0100	1-14- 30
30370-0100	1-15- 37
30370-0100	1-16- 45
30370-0100	1-17- 21
30370-0100	1-18- 21
30370-0100	1-19- 29
30370-0100	1-20- 29
30370-0100	1-20-
30370-0100	1-21- 66
30370-0100	1-22- 33
30370-0100	1-23- 33
30370-0100	1-24- 42
30370-0100	1-25- 68

PART NUMBER	FIGURE AND INDEX NO.
30475-0100	1-21- 64
31240-0014	1-5- 1
31240-0028	1-5- 2
31390-1514	1-2- 1
31390-1528	1-2- 2
31396	1-2- 38
31398	1-2- 37
31640-0000	1-4- 41
31683-0020	1-21- 68
31683-0020	1-22-
31683-0020	1-23-
31683-0020	1-24-
31683-0020	1-25-
32350-0000	1-4- 42
32570-0000	1-4- 2
32604-0000	1-4-
32604-0000	1-4-
32680-0000	1-1- 12
32802-1014	1-1- 2
32802-1028	1-1- 3
32802-1128	1-1- 4
32880-0100	1-1- 6
33570-1000	1-9- 1
338-4032	1-2- 39
33803-0000	1-1-11A
33827-0000	1-1- 11
33827-0000	1-8-
33950-1100	1-10- 1
33970-0000	1-10- 4
34290-0000	1-10-
34950-0014	1-12- 6
34950-0028	1-12- 7
34960-0000	1-12- 1
34970-0000	1-12- 22
34970-0000	3-7- 1
34980-0000	1-12- 8
35032-0012	1-9-
35032-0012	1-10-
35032-0012	1-10-
35060-0014	1-13- 6
35060-0014	1-14- 6
35060-0014	1-15- 39
35060-0014	1-16- 46
35060-0014	1-17- 22
35060-0014	1-18- 22
35060-0014	1-19- 31
35060-0028	1-20- 33
35209	1-8- 2
35213	1-10- 3
35540-0000	1-9- 15
35540-0000	1-10- 7
35548-0225	1-11-
35660-1014	1-13- 1
35660-1014	1-14- 1
35660-1014	1-15- 1
35660-1014	1-16- 1
35660-1014	1-17- 1
35660-1014	1-18- 1
35660-1014	1-19- 23
35660-1028	1-20- 1
35670-1014	1-21- 1
35670-1014	1-22- 1
35670-1014	1-23- 1
35670-1014	1-24- 1
35670-1028	1-25- 1
35693-0003	1-9-
35693-0003	1-10-
35693-0004	1-10-
35700-1000	1-1- 1
35700-1100	1-1-
35910-0014	1-22- 18
35910-1014	1-21- 9
35910-1014	1-23- 18
35910-1014	1-24- 36
35910-1228	1-25- 60
36120-1114	1-4-
36194-0001	1-11-
36194-0001	1-11-
36300-0000	1-4-
36320-0000	1-12- 17
36363-0000	1-9- 47
36363-0000	1-10-
36364-0000	1-10- 34
36380-1000	1-8- 1
36420-1100	1-8- 7
36440-0000	1-11- 1
36450-0000	1-11- 2
36600-0000	1-9- 14
36600-0000	1-10- 6
37243	1-10- 18
37243-0000	1-9- 38
37449-0002	1-12-
37451-0002	1-12-
37525-0071	1-10- 2
37525-0081	1-9- 2
37570-0001	1-22- 31
37570-0001	1-23- 31
37570-0001	1-24- 40
37570-0001	1-25- 67
37600-1114	1-4-
37600-1128	1-4-
38144-0030	1-25-
38144-0060	1-14-
38144-0060	1-19-
38144-0060	1-20-
38144-0060	1-22-
38144-0060	1-23-
38144-0060	1-24-
38144-0060	1-24-
38144-0060	1-25-
38144-0080	1-21-
38144-0100	1-13-
38144-0100	1-15-
38144-0100	1-16-
38144-0100	1-17-
38144-0100	1-18-
38144-0100	1-22-
38144-0100	1-23-
38422-0014	1-8- 17
38422-0028	1-8- 18
38423-0001	1-14-
38423-0001	1-15-
38450-0003	1-8- 3
400HM3W	1-5- 18
400HM3W	1-5- 31
400HM3W	1-5- 42
400HM3W	1-5- 56
400HM3W	1-5- 68
41223-2	2-4-
41228-6	2-4-
41247-102	2-4-
41291-101	2-4-
463	3-5- 4
463	3-5- 13
463	3-6- 9
463	3-6- 17
470 OHM, 1/4W	2-4-
49164-21	1-13- 42
50328-0002	1-13-
50328-0002	1-14-
50328-0002	1-15-
50328-0002	1-16-
50328-0002	1-17-
50328-0002	1-18-
50328-0002	1-19-
50328-0002	1-20-
560 OHM 1/2 W	4-4-
560 OHM 1/2 W	4-4-
5930 1/2	3-5- 12
820HM2W	1-5- 77
85075	1-8-
8661	1-8-
8899	1-7-
9341GL	1-2-
9341GL	1-3-
9341GL	1-4-
9341GL	1-6-
9341GL	1-7-
9341GL	1-9-
9341GL	1-10-
9341G6	1-8-

CUSTOMERS' COMMENTS ON MANUAL

Cessna Aircraft Company has endeavored to furnish you with an accurate, useful, up-to-date manual. This manual can be improved with your help. Please use the attached return cards to report any errors, discrepancies, and omissions in this manual as well as any general comments on adequacy of the manual you wish to make.

MANUAL TITLE _____

MANUAL PART NO. _____ MANUAL DATE _____

YOUR NAME AND/OR COMPANY _____

ADDRESS _____ DATE _____

PAGE	DISCREPANCIES, ERRORS, COMMENTS

I CONSIDER THIS MANUAL (WILL SERVE; HAS SERVED) ITS PURPOSE

☐ WELL; ☐ ADEQUATELY; ☐ POORLY.

MANUAL TITLE _____

MANUAL PART NO. _____ MANUAL DATE _____

YOUR NAME AND/OR COMPANY _____

ADDRESS _____ DATE _____

PAGE	DISCREPANCIES, ERRORS, COMMENTS

I CONSIDER THIS MANUAL (WILL SERVE; HAS SERVED) ITS PURPOSE

☐ WELL; ☐ ADEQUATELY; ☐ POORLY.

MANUAL TITLE _____

MANUAL PART NO. _____ MANUAL DATE _____

YOUR NAME AND/OR COMPANY _____

ADDRESS _____ DATE _____

PAGE	DISCREPANCIES, ERRORS, COMMENTS

I CONSIDER THIS MANUAL (WILL SERVE; HAS SERVED) ITS PURPOSE

☐ WELL; ☐ ADEQUATELY; ☐ POORLY.

Cessna®

PLACE STAMP HERE

BUSINESS REPLY MAIL

Cessna Aircraft Company
CUSTOMER SERVICES DEPARTMENT
Attn: PRODUCT SUPPORT MANAGER
P.O. BOX 1521,
WICHITA, KANSAS 67201

PLACE STAMP HERE

BUSINESS REPLY MAIL

Cessna Aircraft Company
CUSTOMER SERVICES DEPARTMENT
Attn: PRODUCT SUPPORT MANAGER
P.O. BOX 1521,
WICHITA, KANSAS 67201

PLACE STAMP HERE

BUSINESS REPLY MAIL

Cessna Aircraft Company
CUSTOMER SERVICES DEPARTMENT
Attn: PRODUCT SUPPORT MANAGER
P.O. BOX 1521,
WICHITA, KANSAS 67201

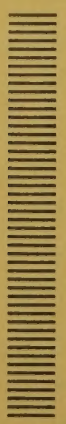

"TAKE YOUR CESSNA HOME FOR SERVICE AT THE SIGN OF THE CESSNA SHIELD".

CESSNA AIRCRAFT COMPANY

WICHITA, KANSAS